CONTROL SYSTEMS

D-M-E

Every step of the way

Table of Contents

Online Price Guide

Go to www.dme.net/prices for the latest pricing guide.

Index

D-M-E has supported moldmakers, processors and designers around the globe since it innovated the standard mold base in 1942. Today, we offer the industry's broadest range of market-leading products.

Terms and Conditions of Sale

1. **FOB POINT / PRICES:** Products are sold F.O.B. point of origin. Any taxes are in addition to the prices and may be invoiced later.
2. **SHIPPING SCHEDULE:** The shipping schedule is our current estimate of delivery dates and we agree to use reasonable efforts to comply with the schedule.
3. **WARRANTY:**
   (a) Any D-M-E trademarked or tradenamed product or part thereof manufactured by or for us which, under normal operating conditions in the plant of the Buyer thereof, proves defective in material or workmanship, as determined by our inspection, within 12 months from the date of shipment will be replaced or repaired free of charge to Buyer.

   This warranty is contingent upon the following conditions: *that we promptly receive notice of the defect; that Buyer establish that the product has been properly installed, maintained, and operated within the limits of related and normal usage as specified by us; and that, upon our request, Buyer will return to us at our expense the defective product or part thereof.*

   (b) The terms of this warranty do not in any way extend to any product or part thereof which have a life, under normal usage, inherently shorter than 12 months.
   (c) The conditions of actual production in each end user's plant vary considerably. Therefore, descriptions of the production or performance capabilities of any product or software materials are estimates only and are not warranted.
4. **EXCLUSIONS OF WARRANTIES:** THE WARRANTIES TO REPAIR OR REPLACE DEFECTIVE PRODUCTS OR PARTS AS SET FORTH IN PARAGRAPH 3, AND ANY ADDITIONAL WARRANTY EXPRESSLY STATED TO BE A WARRANTY AND SET FORTH IN WRITING AS PART OF THESE TERMS HEREIN ARE IN LIEU OF ALL OTHER WARRANTIES, EXPRESS OR IMPLIED, INCLUDING BUT NOT LIMITED TO, ANY IMPLIED WARRANTY OF MERCHANTABILITY OR FITNESS FOR A PARTICULAR PURPOSE.
5. **LIMITATION OF REMEDIES AND LIABILITIES:**
   UNDER NO CIRCUMSTANCES SHALL WE OR ANY AFFILIATE OF OURS HAVE ANY LIABILITY WHATSOEVER FOR INCIDENTAL OR CONSEQUENTIAL DAMAGES HOWSOEVER CAUSED OR ARISING (INCLUDING CONTRACT, NEGLIGENCE, STRICT LIABILITY OR OTHERWISE), such as, but not limited to, loss of profit or revenue; loss of use of the product, part thereof; cost of capital; cost of replacement equipment; or claims resulting from contracts between Buyer, its customers and/or suppliers. Unless expressly provided for herein, in no event shall we or any affiliate of ours assume responsibility or liability for (a) penalties, penalty clauses or liquidated damages clauses of any description, (b) certifications or (c) indemnification of Buyer or others for costs, damages or expenses arising out of or related to the product or part thereof.
6. **CANCELLATION:** Unless otherwise agreed, Buyer may cancel all or any part of the order by written notice received by us before our completion of the order or applicable portion of the order. On receipt of such notice, all work on the order or part thereof canceled will be stopped as promptly as is reasonably possible. Buyer will then be invoiced for and will pay to us a cancellation charge. For completed items, the charge will be equal to their established prices. For items not completed, the charge will be equal to our full cost plus a premium in addition to a charge for any packing and storage and less a credit for the balance of the material as scrap.
7. **PAYMENT TERMS:** Payment is due in accordance with any applicable progress, advance or other agreed upon payment schedule, or, if no such schedule has been agreed to, upon Acceptance as specified in Paragraph 8, but in no event later than 30 days from the date of invoice. No cash discount is provided. If, in our judgment, Buyer's financial condition changes, we may stop work until financial arrangements satisfactory to us are made.
8. **ACCEPTANCE OF PRODUCT:** Each such product shall be deemed to be accepted within seven days after delivery of the product to the Buyer, unless we receive written notification of rejection for cause from Buyer within the seven day period.

   "Returned Goods": No goods are returnable without prior approval, prepaid transportation and an issued RMA number. All items are subject to our inspection before credit will be allowed. Special mold bases or steel, items involving custom work, or items not shown in our catalog are considered non-returnable. A minimum service charge of 10% will be made on all returned goods.
   NO GOODS ARE RETURNABLE LATER THAN THIRTY DAYS AFTER RECEIPT OF MERCHANDISE.
9. **PATENT INDEMNITY:** We shall defend any suit or proceeding brought against Buyer and pay all costs and damages awarded against Buyer provided that:
   (a) The suit or proceeding is based upon a claim that the product or part thereof is an infringement of any claim of a presently existing U.S. patent;
   (b) The claim of infringement is not based, directly or indirectly, upon (i) the manufacture, use, or sale of any product furnished by us which has been modified without our consent; or, (ii) the manufacture, use, or sale of any combination of a product furnished by us with products not furnished by us; or (iii) performance of a patented process using a product furnished by us or production thereby of a patented product; and,
   (c) We are notified promptly and given information and assistance (at our expense) and the authority to defend the suit or proceeding. We shall not be responsible hereunder for any settlement made without our written consent nor shall we be responsible for costs or expenses incurred without our written consent. If our product is adjudicated to be an infringement and its use in the U.S. by Buyer is enjoined, we shall, at our own expense, either:
   - (i) procure for Buyer the right to continue using our product;
   - (ii) replace it with a noninfringing product;
   - (iii) modify it so it becomes noninfringing;
   - (iv) remove the product or part thereof and refund Buyer's net book value and transportation costs attributable to it.

   The foregoing states our entire liability with respect to any patent infringement by our products or any parts thereof. To the extent that our product or any part thereof is supplied according to specifications and designs furnished by Buyer, Buyer agrees to indemnify us in the manner and to the extent set forth above insofar as the terms thereof are appropriate.
10. **FORCE MAJEURE:** We shall not be liable for any delay in performance or nonperformance which is due to war, fire, flood, acts of God, acts of third parties, acts of governmental authority or any agency or commission thereof, accident, breakdown of equipment, differences with employees or similar or dissimilar causes beyond our reasonable control, including but not limited to, those interfering with production, supply or transportation of products, raw materials or components or our ability to obtain, on terms we deem reasonable, material, labor, equipment or transportation.
11. **ACCEPTANCE OF ORDERS:** Buyer agrees that all orders, including any arising from our Proposal, shall include these terms and conditions only, notwithstanding any different or additional terms that may be embodied in Buyer's order. All orders are subject to our acceptance and we reserve the right to reject orders as, in our sole judgement, mandated by business conditions. We reserve the right to not proceed with any order until all necessary information is received from Buyer.
12. **MERGER CLAUSE:** This Agreement entirely supersedes any prior oral representations, correspondence, proposal, quotation, or agreement. This writing constitutes the final and total expression of such agreement between the parties, and it is a complete and exclusive statement of the terms of that agreement.
13. **ASSIGNMENT:** Neither party may assign this Agreement without the written consent of the other party, except that we may assign this Agreement to a third party that acquires substantially all of our assets or we may assign the flow of funds arising out of this Agreement.
14. **GOVERNING LAW:** This Agreement shall be governed by and construed in accordance with the laws of the State of Michigan.

Sales and Ordering Information

U.S.A.

TERMS AND CONDITIONS OF SALE: See previous page.

PHONE ORDERS – TOLL FREE: 800-626-6653. D-M-E's Customer Service Dept. operates Monday through Friday from 8 a.m. to 8 p.m. E.S.T. Calls can be made from anywhere in the continental U.S. and Puerto Rico (Puerto Rico: use "137" prefix instead of "1"). Our Customer Service Representatives will be happy to answer your questions on D-M-E products or services, provide on-the-spot feedback on product availability and shipping details, or take any messages you wish relayed to your local D-M-E sales, manufacturing or technical service representatives.

MAIL ORDERS: If you prefer to order by mail, please address your order to:

- D-M-E Company, 29111 Stephenson Highway, Madison Heights, Michigan 48071-2330
  ATTN: Customer Service Dept.

FAX: You may fax your order to:

- D-M-E Customer Service
  248-398-6174 • 888-808-4363

CHECKS OR MONEY ORDERS: When paying invoices by check or money order, please make payable to *D-M-E Company.* Include remittance copy of invoice and mail to:

- D-M-E Company, Department Lock Box 78242, P.O. Box 78000, Detroit, Michigan 48278-0242

WALK-IN ORDERS, PICK-UPS AND RETURNS: If desired, ordered products in stock at your nearest D-M-E Service Center can be picked up rather than shipped. Walk-in orders at Service Center locations can also be processed while you wait. Products being returned for repair or exchange should be processed through Customer Service prior to being returned.

SPECIAL MACHINING SERVICES: Prints for quotation on special machining work can be sent by EDI to dme_cad@dme.net or mailed to the Estimating Department of the D-M-E manufacturing location nearest you. Call our toll-free number if desired to clarify location which serves your area.

Estimating locations are:

- 70 East Hillis Street, Youngwood, Pa 15697, FAX: 724-925-2424
- 1117 Fairplains Street, Greenville, MI 48338, Tel. 616-754-4601, FAX: 616-225-3924
- 3275 Deziel Drive, Windsor, Ont N8W 5A5, Tel. 519-948-5001, FAX: 519-948-4652
- 464-466 Windy Point Drive, Glendale Heights, IL 60139, Tel. 630-469-4280, FAX: 630-469-4740 (estimating only)

Please add "D-M-E Company" and "Attn: Estimating Dept." to above addresses when mailing prints. To obtain prices and delivery on special mold base orders or to check status of special work in progress please contact Customer Service.

CANADA

TERMS AND CONDITIONS OF SALE: See previous page.

PHONE ORDERS: Contact our Mississauga, Ontario office at 800-387-6600, FAX: 800-461-9965.

MAIL ORDERS: Send to: D-M-E of Canada, Ltd., 6210 Northwest Drive, Mississauga, Ontario L4V 1J6.

CHECK OR MONEY ORDERS: Make payable to *D-M-E of Canada, Ltd.* Include remittance copy of invoice and mail to Mississauga address above.

WALK-IN ORDERS, PICK-UPS, RETURNS, AND SPECIAL MACHINING: Contact our Mississauga office.

Hot Runner Warranty

D-M-E Company
29111 Stephenson Highway, Madison Heights, MI 48071
Tel. 248/398-6000 ▪ FAX 248/398-6174

D-M-E Hot Runner Systems and Temperature Controllers are warranted pursuant to D-M-E Company's standard terms and conditions (see page 4) for the time periods set forth below. The warranty (i) *covers items sold and shipped [supplied in accordance with orders placed by the customer with D-M-E on or after JULY 1, 2003,* (ii) *applies only to the original D-M-E customer and,* (iii) *is not transferable to subsequent owners of the product except as specifically set forth herein (see Transferability below for conditions).*

WARRANTY PERIODS APPLICABLE TO SPECIFIED D-M-E PRODUCTS; COVERAGE STARTS UPON DATE OF SHIPMENT:

Item	Coverage
D-M-E Hot Runner Package Systems (plates designed, machined & assembled by D-M-E, **excluding Electrical Parts**)	Three (3) years
Galaxy & Stellar Hot Runner Package Systems Only (plates designed, machined & assembled by D-M-E, **excluding Electrical Parts**)	Plastic leakage within hot runner plates covered for Three (3) years; **excluding Gate Detail. (Galaxy & Stellar Hot Runner Package Systems Only)**
D-M-E Hot Runner Systems supplied as Manifold and Components Only (neither plates nor assembly supplied by D-M-E, **excluding Electrical Parts**)	One (1) year
D-M-E Electrical Parts (all heaters and thermocouples)	One (1) year
D-M-E Mold Controls (Temperature, Valve Gate & Cavity Pressure Controls, **excluding Fuses & Triacs**)	Three (3) years

Replacement or repair will be made at the election of D-M-E; implemented at a D-M-E facility and/or by shipment of replacement parts to the customer for installation and/or return of defective parts to D-M-E for repair.

Transferability:

This warranty may be transferred by the original D-M-E Customer to a subsequent owner of the product *if all of the following conditions exist:* (i) the original D-M-E Customer purchased the product for purposes of re-sale or other immediate transfer and D-M-E was made aware of these purposes at the time of purchase in writing, (ii) within thirty (30) days from the date of invoice, D-M-E is notified in writing of the transfer and provided with the name of the new owner (hereafter "Transferee"), the contact person of the Transferee and the Transferee's address.

Exclusions:

- Normal wear of the system and components including, but not limited to: Nozzle Tips, Gate Shell Insulators, Nozzle Seal Rings, O-rings, Piston Seals, Valve Stems and Electrical connectors
- Damage to the critical seal-off areas on the manifold, nozzle bodies, or in the mating cavities or cavity inserts caused by improper assembly, operation, disassembly and maintenance
- Wear or damage resulting from corrosion or processing of abrasive/aggressive resins
- Damage due to failure to follow recommended operation and maintenance procedures specified in the D-M-E Hot Runner Manual, Hot Runner Nameplate, Service Bulletins, User Manuals or failure to follow standard industry operation and maintenance procedure
- Damage caused by abuse, neglect, and failure to adhere to D-M-E instructions and operational recommendations
- Damage caused by improper installation, operation and maintenance
- Damage resulting from modifications to the product or component parts, abuse or neglect
- Failure caused by modifications made to the product without the prior written approval of D-M-E
- Damage resulting from operation of products at injection pressures greater than 20,000 psi (1360 bar) on 250, 375, and 625 Series, Gate-Mate 4, Valve Gate, Galaxy and Stellar Systems; unless specifically designed and manufactured for higher pressure applications in agreement with manufacturer
- Damage or failure caused by the product's inability to perform as a component of a system design not supplied by D-M-E
- Operator absence or operator error
- Operator maintenance and training capability
- Electrical interruptions
- Events beyond the control of D-M-E
- Errors or actions by a third party
- Non-compliance with local laws, codes, ordinances or regulations codes or bylaws unless D-M-E is informed of them by our customer at the time of order placement

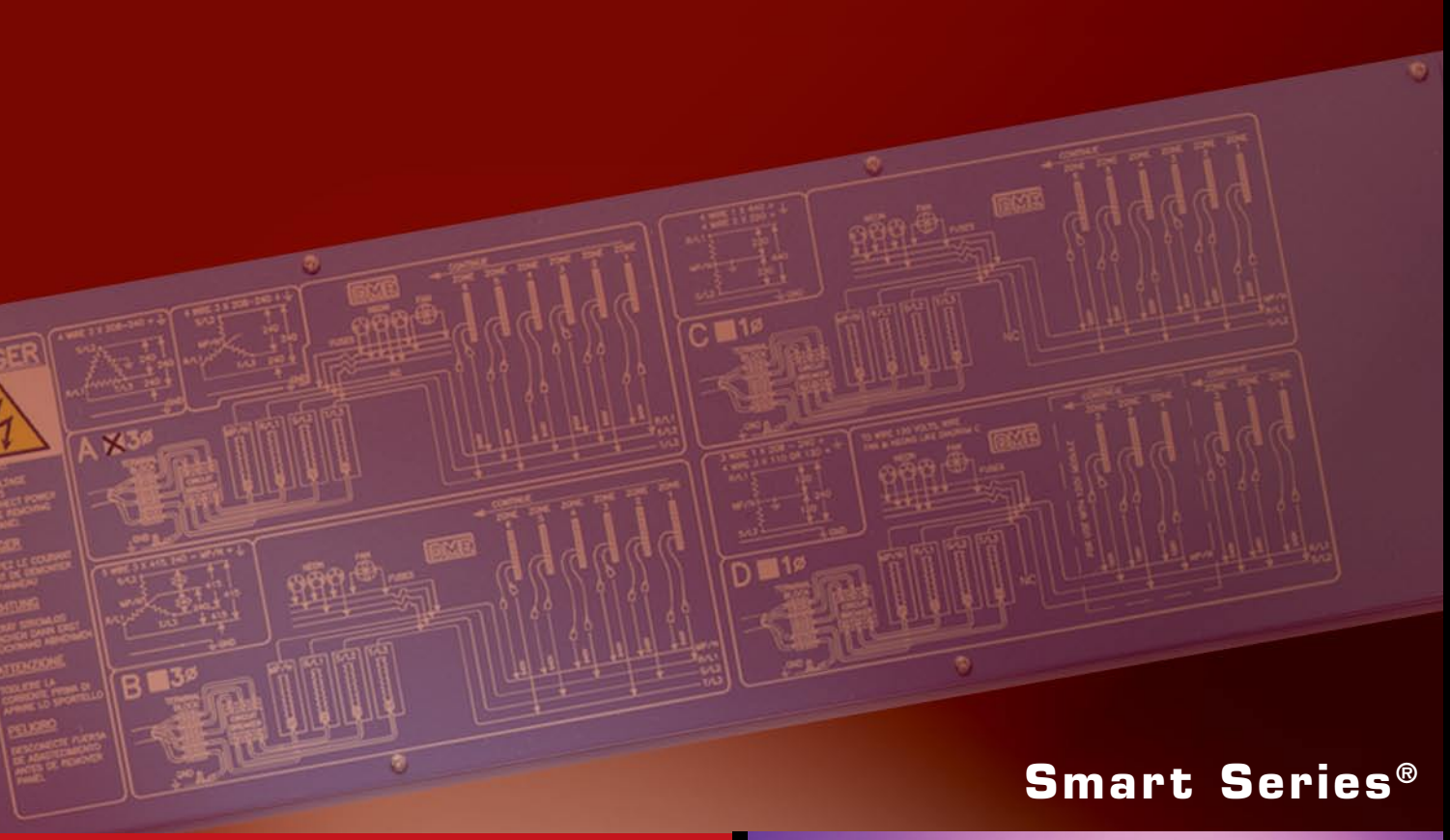

Smart Series®

ROHS/WEEE-COMPLIANT

TEMPERATURE CONTROLS

FOR HOT RUNNER SYSTEMS

RoHS/WEEE Compliant
Advanced Temperature Control for Hot Runner Systems

Capability/RoHS and WEEE Compliant

D-M-E offers 2-, 5-, 8-, and 12-zone standard mainframes for 15A operation and 1-, 2-, 3-, and 5-zone standard mainframes for 30A operation. Components listed in this catalog satisfy all international compliances. This includes RoHS (Restriction of Hazardous Substances) that prohibits or restricts the use of six potentially harmful materials in electronic equipment, and WEEE (Waste Electrical and Electronic Equipment) that requires equipment made after August 2005 to be taken back and recycled by the manufacturer, rather than just "thrown away."

Three-Year Warranty

All D-M-E temperature controllers are now covered by a three-year warranty, excluding fuses and triacs.

Electrical Noise Immunity

To enhance immunity from electrical noise, power and thermocouple wire are harnessed in separate wire ways within the body of the frame. Additional noise immunity is provided through the use of shielded thermocouple wires.

The D-M-E Smart Series® is the result of intensive and dedicated research with a goal of designing today's most versatile and reliable line of temperature controllers. D-M-E achieved this goal by not only incorporating the latest technology, but by also making certain that each controller is easy to install and above all…easy to operate.

Heavy Duty Welded Construction

With years of experience behind its design, the Smart Series line is built to last under the most rigorous conditions. The mainframe's welded 16 gauge steel construction ensures long life and peak performance. Cooling fans in the frame are strategically located to increase air ventilation, maintain cooler running conditions, and promote control module reliability.

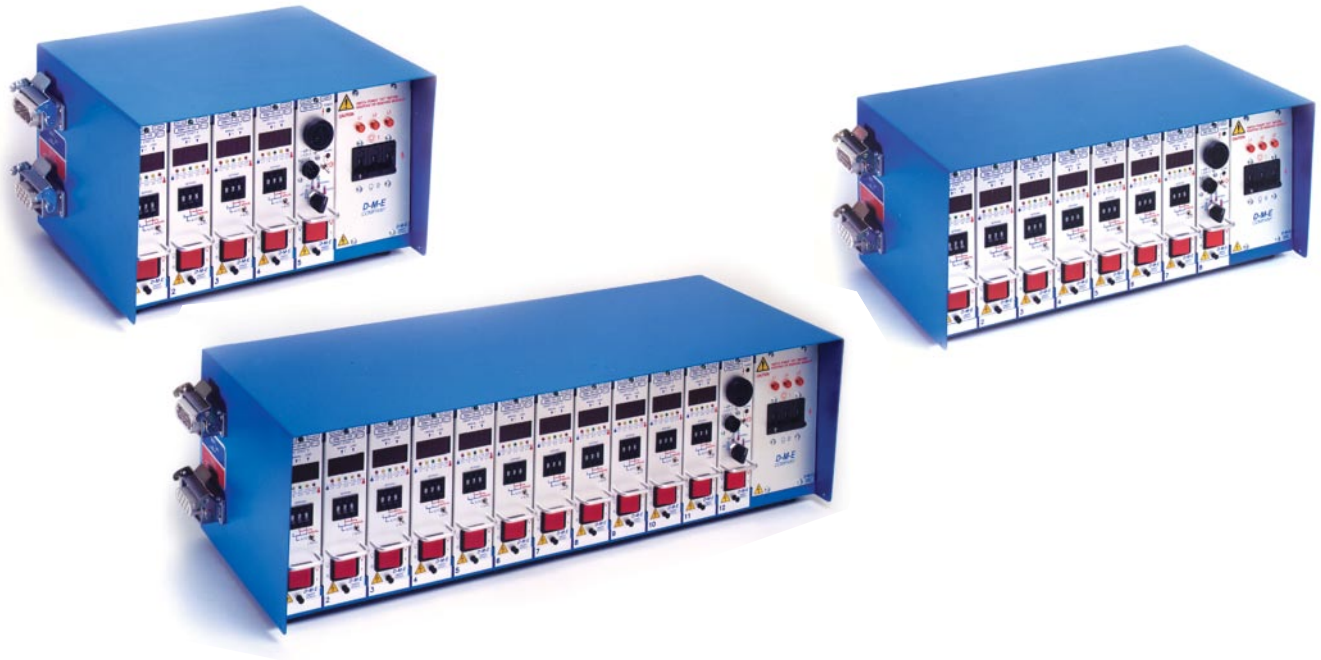

CE COMPLIANT! D-M-E Mainframes and Modules comply with Electromagnetic compatibility and low voltage directives

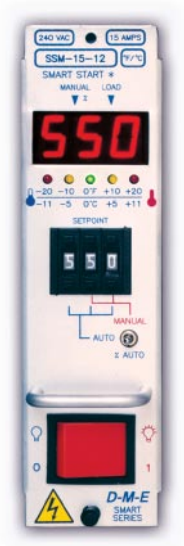

SSM-15-12

Control Modules

SSM (15 and 30 AMP): The SSM module provides accurate temperature control, including Smart Start® heater dry out circuitry, thermocouple fault displays and auto/manual modes of operation. The SSM features automatic or manual bumpless transfer which, in the event of a thermocouple fault, provides switch over to manual mode at the proper power setting to continue molding until the fault can be corrected. This module can also trigger remote standby heat (idle), boost, off, and alarm functions when used with the TAS module.

DSS (15 and 30 AMP): For those who require independent dual displays for process and setpoint temperatures, the DSS is the ideal choice. The DSS module also features automatic or manual bumpless transfer. This module is also fully compatible with the TAS module for standby heat and alarm functions.

Accessory Modules

TAS: The TAS module provides over/under visual and audible alarms, boost, and standby heat control with control modules as stated above. The TAS module can accommodate up to 63 zones of control. Alarm is activated at ± 30° F. See pages 37-38 for details.

NOTE: The TAS accessory module requires the use of "MFC" style communications mainframes. Non-communications frames may be upgraded on-site with installable kits.

DSS-15-12

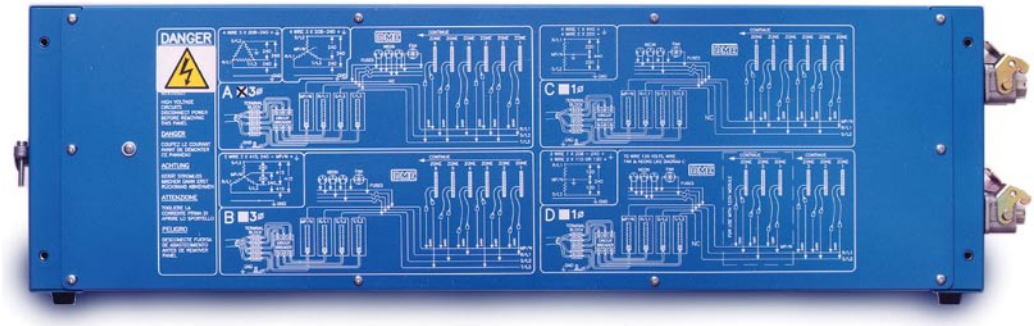

Simplified Power Hook-Up

Concern for user convenience didn't stop with improved operation features. D-M-E went one step beyond to ensure that the power hook-up procedure goes smoothly as well. For this reason, detailed schematics for various hook-ups are provided directly on all mainframe back panels. If it is ever necessary to change the configuration, these diagrams will help ensure safe and proper connections. All wiring diagrams can be referenced at the end of this brochure.

SSH Controller (10 AMP)

SSH-10-22

The SSH is a stand-alone single zone controller ideal for use with hot sprue bushings or machine nozzles.

Smart Series® Temperature Control Systems

1. Mainframe
2. Circuit Breaker/Disconnect
3. Mold Power Cable
4. Thermocouple Cable
5. Mold Power Input Connector
6. Insulated Crimp Connector
7. Thermocouple Connector
8. Terminal Mounting Boxes
9. Mainframe Blank Panels
10. Module Replacement Fuses
11. Control Modules

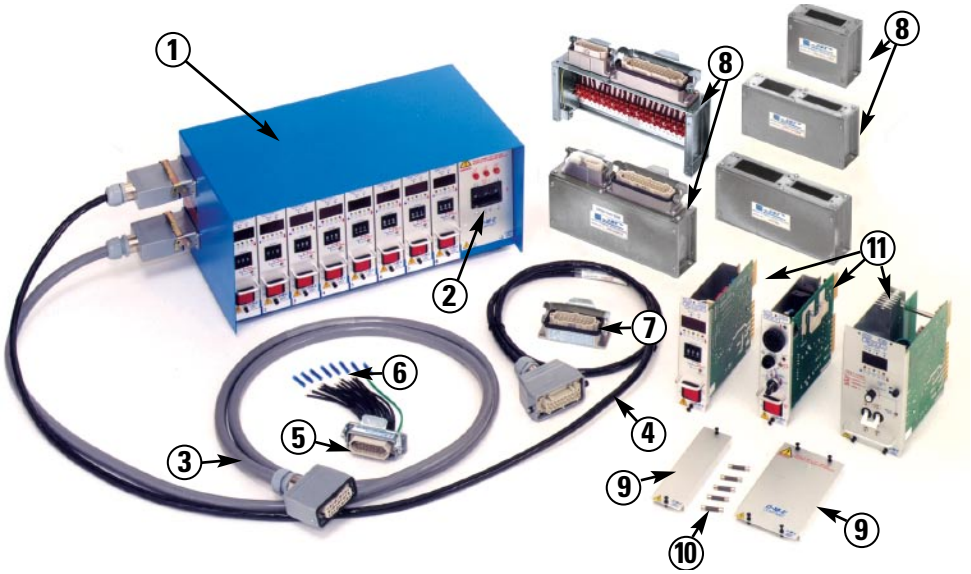

TABLE OF CONTENTS — PAGE

Typical System Configurations

SSM-15-12
DSS-15-12

5 Zones of Control (15 AMP)



MFP-5-G

MPC-5-C10-G

TC-5-C10-G
PTC-5-TB-TS
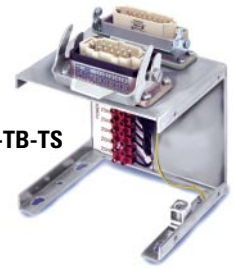

MFS-512-G

X5

SSM-15-12
DSS-15-12

8 Zones of Control (15 AMP)



MFP-8-G

MPC-8-C10-G

TC-8-C10-G
PTC-8-TB-TS
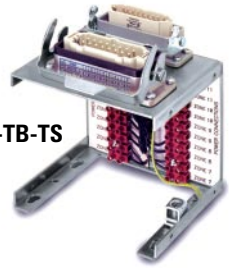

MFS-512-G

X8

SSM-15-12
DSS-15-12

12 Zones of Control (15 AMP)



MFP-12-G

MPC-12-C10-G

TC-12-C10-G
PTC-12-TB-TS
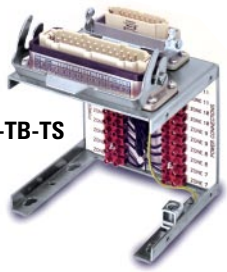

MFS-512-G

X12

SSM-30-12
DSS-30-12

2 or 3 Zones of High Power Control (30 AMP)



MFHP-2-G
MFHP-3-G

MPCH-23-C10-G

TC-5-C10-G

MTC-5-G

PICH-23-G

PTCH-23-TB-G

MFS-512-G

X2 or 3X

SSM-30-12
DSS-30-12

5 Zones of High Power Control (30 AMP)



MFHP-5-G

MPCH-5-C10-G

TC-5-C10-G

MTC-5-G

PICH-5-G

PTCH-5-TB-G

MFS-512-G

X5

RoHS/WEEE Compliant
Smart Series® Single Zone Temperature Controller

- Compact
- Easy-to-use
- Includes new, improved and unique features
- Provides microprocessor-based PID control
- More accurate than analog or variac controllers
- Built-in thermocouple diagnostics
- Ideal for use with a hot sprue bushing or a machine nozzle

SSH-10-22/21 (10 AMP)

Key Features

- **Large Digital Display**
  - For easier readability of temperature, % power and faults
- **Setpoint Pushwheel**
  - For setting desired setpoint temperature
  - Allows adjustment of setpoint before turning power on
- **AUTO % Power Display**
  - Shows % power output while in AUTO mode
  - Indicates average % power requirement on thermocouple failure
  - A diagnostic tool for solving problems

Switchable Options

- **Shorted Thermocouple Sensitivity Adjustment**
  - Operation can be tailored to fast or slow reaction times
  - Sensitivity can be adjusted with internal switches
  - Very useful for zones with long startup times
- **Switchable °C/°F Operation**
  - Scale indicated at startup
- **K Type Thermocouple Support**
- **Cut Feature**
  - Gain cut feature for small nozzles and heaters with ungrounded internal thermocouples

Operational Refinements

- **Improved SmartStart®**
  - A more gradual temperature rise leads to a more effective heater dry out period, thereby extending heater life
  - SmartStart® now available as an option in manual mode
- **SelectiveCycle®**
  - A very high speed power output approach
  - Enables accurate temperature control and longer heater life
- **Bumpless Transfer**
  - When a thermocouple failure occurs, operation is automatically continued with a learned % power
  - Unique software accurately assigns percent power setting
- **Third Fuse**
  - Allows for display of low temperature alarm when the load fuses are blown

Front Panel Digital LED Indicators

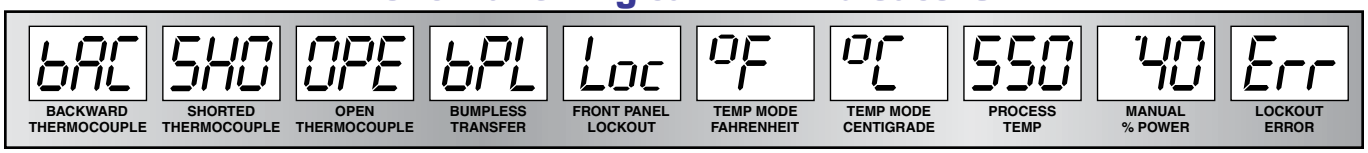

RoHS/WEEE Compliant
Smart Series® Single Zone Temperature Controller

SSH-10-22/21 (10 AMP)

Controller includes 19-foot power cord, mating mold power and thermocouple connector (CKPTM-1) and two spare fuses (ABC-10). Additional cables and/or connectors must be ordered separately. See Page 15 for detailed information on cables and connectors. Warranty: Three year (excluding triac and fuses).

CONTROLLER ITEM NUMBER	VOLTS (VAC)
SSH-10-22	240
SSH-10-21	120

CABLE* ITEM NUMBER	LENGTH (FEET)
MPTC-10	10
MPTC-20	20

See page 15

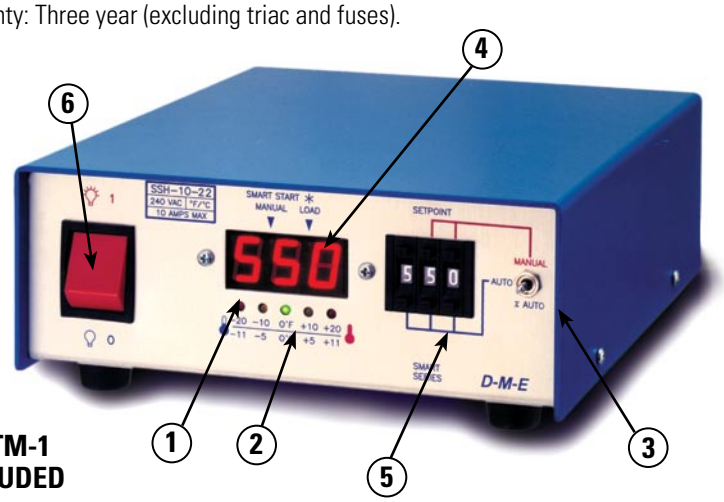

CKPTM-1 INCLUDED

MOLD POWER AND THERMOCOUPLE CONNECTOR* ITEM NUMBER
CKPTIC-1

See page 15

*** ITEMS ORDERED SEPARATELY**

Front Panel Controls and Indicators

1. **Process Temperature Display:**
   Shows process temperature, thermocouple faults and other operational modes. Displays % power when switch (3) is pressed down.

2. **Temperature Deviation Lights:**
   Indicates deviation from setpoint. Outer lights blink at more than ±40°F (22°C) from setpoint.

3. **Auto / Manual / % Auto Power Switch:**
   Selects AUTO or MANUAL control mode. Shows % power when pressed into "% AUTO" position.

4. **LED Mode Indicators:**
   Left LED illuminates during manual mode. Right LED illuminates when power is supplied to heater. Right LED blinks during SmartStart®.

5. **Setpoint Pushwheel:**
   Three digit switch programs setpoint in AUTO mode. Right two digits program % power in MANUAL mode.

6. **Power On/Off Switch:**
   Controls AC power to module.

Rear Panel

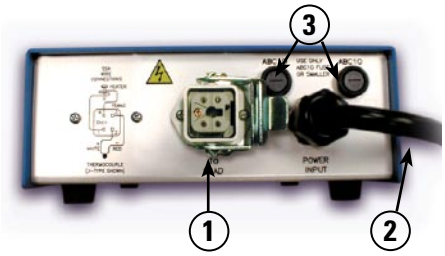

1. **Mold Power and Thermocouple Output Connector:**
   CKPTIC-1 connects to the heater and thermocouple. Mating connector CKPTM-1 is supplied with controller.

2. **Power Input Cord:**
   Nineteen foot cord supplies power to controller. Plug supplied with SSH-10-21 (120 VAC) units. No plug supplied with SSH-10-22.

3. **Load Fuse Receptacles:**
   Provides safe and easy replacement of load fuses.

RoHS/WEEE Compliant
Smart Series® Single and 2-Zone Mainframes (10 AMP max.)

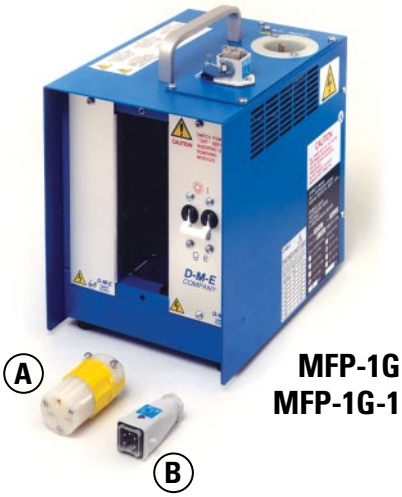

MFP-1G
MFP-1G-1

A: AC2024F (Power to Mainframe); AC1512F supplied with MFP-1G-1

B: CKPTM-1 (Connector to heater)

This single-zone controller is ideal for use with Straight-Shot and Gate-Mate hot sprue bushings.

MFPR-2G

A: AC2024F (Power to Mainframe)

B: CKPTM-1 (Connector to heater)

Single zone, horizontal 10 amp controllers (SSH-10-22/21) also available. See page 12.

DIMENSIONS
(all frames)
7"W x 9"H x 10"D
(9"H dimension does not include connectors or handle)

Single and Two-Zone 10 AMP Mainframes

The D-M-E Portable 10 AMP Mainframes are designed for use with 10 or 15 AMP* Smart Series or G-Series Temperature Control Modules. Mainframe is supplied with power input and power-thermocouple output connectors. Circuit breaker provides safety for operation. Control modules and cables are to be ordered separately.

NOTE: Maximum safe operating amperage is 10 AMPS per zone when using 15 AMP modules. If application will draw more than 10 AMPS per zone, use 15 AMP Mainframe (MFFPR-2G).

*User must install ABC10 (10 AMP) fuses in the 15 AMP control modules to protect the mainframe.

Single and Two-Zone 10 AMP Mainframes (50-60 Hz, single phase)

ZONES	ITEM NUMBERS**	VOLTS	WATTS PER ZONE	CONNECTORS SUPPLIED
1	MFP-1G-1	120	1200	(1) AC1512F (POWER IN) (1) CKPTM-1 (POWER-T/C OUT)
1	MFP-1G	240	2400	(1) AC2024F (POWER IN) (1) CKPTM-1 (POWER-T/C OUT)
2	MFPR-2G	240	2400	(1) AC2024F (POWER IN) (2) CKPTM-1 (POWER-T/C OUT)

**Includes frame and connectors listed. Modules and cables ordered separately.

NOTE: Replacement power connectors in frame are also available on special order.

Recommended Mold Pocket Layout

(For Mold Power-Thermocouple Input Connector CKPTIC-1)

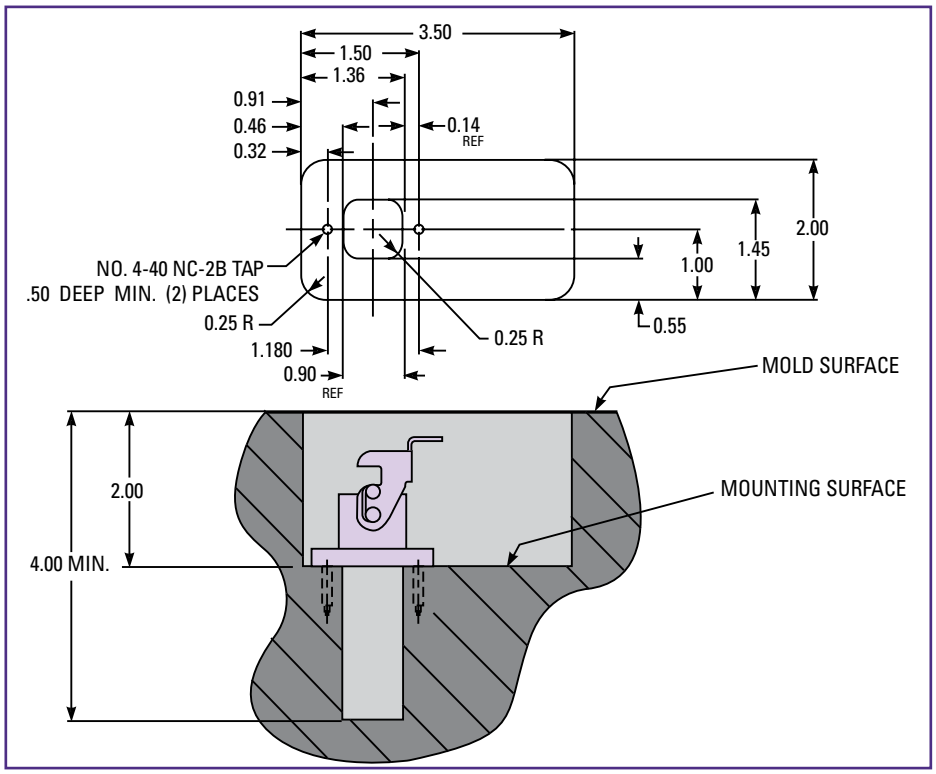

RoHS/WEEE Compliant: Smart Series® Single and 2-Zone Mainframe Accessories (10 AMP)

For Use With MFP-1G, MFP-1G-1, MFPR-2-G, SSH-10-22 and SSH-10-21

Mold Power-Thermocouple Input Connector

ITEM NUMBER
CKPTIC-1

A Single-Zone Power-Thermocouple Input Connector is available for mounting in or on the mold to accept the power-thermocouple cable from the mainframe. Water resistant, the connector has an integral retaining latch for a secure cable connection and numbered screw-type terminals for power and thermocouple lead wires.

*Can be mounted on top of mold for use with D-M-E Straight Shot hot sprue bushings.

Armored Mold Power-Thermocouple Cables

ITEM NUMBER
MPTC-10
MPTC-20

Single-Zone Mold Power-Thermocouple Cables are constructed of special lead wire for use in high temperature environments, and are available to connect the mainframe to the connector on the mold. Available in lengths of 10 or 20 feet. Integral retaining latches on the mainframe and mold connections provide secure cable connections. Connector configurations ensure proper insertion of cable.

Replacement Connector Kits (for Controller & Cables)

Power Input Connectors For Mainframe

AC1512F

AC2024F

ITEM NUMBER	VOLTS
AC1512F	120
AC2024F	240

MALE POWER-T/C CONNECTORS;

- CKPTM-1 is on MPTC-10/20 Cables; Mates with Frame or CKPTF-1L Only
- CKPTM-1L Mates With CKPTF-1 Only

CKPTM-1

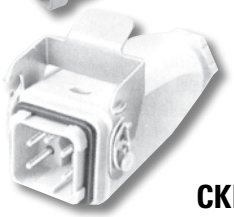

CKPTM-1L

ITEM NUMBER
CKPTM-1
CKPTM-1L

FEMALE POWER – T/C CONNECTORS;

- CKPTF-1 is on MPTC-10/20 Cables; Mates with Mold or CKPTM-1L Only
- CKPTF-1L Mates with CKPTM-1 Only

CKPTF-1

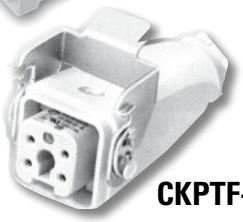

CKPTF-1L

ITEM NUMBER
CKPTF-1
CKPTF-1L

PTC-2-10

ITEM NUMBER
PTC-2-10

Power-Thermocouple Output Connector (for Mainframe Bulkhead)

ITEM NUMBER
CKPTOC-1

Wiring Diagrams

for CKPTIC-1 and CKPTM-1 or CKPTM-1L

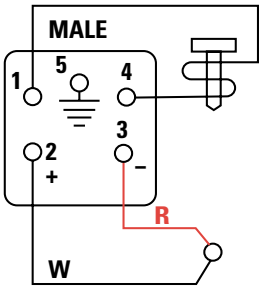

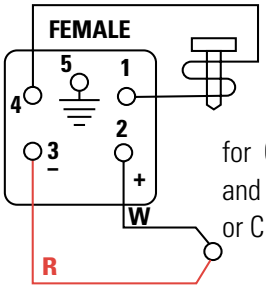

for CKPTOC-1 and CKPTF-1 or CKPTF-1L

Smart Series® 2-Zone Mainframes (15 AMP) and Accessories

Two-Zone 15 AMP Mainframes

Provides 15 AMP (3600 watts) per zone. For use with Smart Series or G-Series modules. Supplied with built-in cooling fan, power input, power output and thermocouple input connectors. Control modules and cables are ordered separately.

TWO-ZONE 15 AMP MAINFRAME (240 VAC, 50-60 Hz, SINGLE PHASE)

ITEM NUMBER	WATTS PER ZONE	CONNECTORS SUPPLIED
MFFPR-2G	3600	(1) AC1240F (POWER IN) (2) AC1524M (POWER OUT) (2) M2MJ (T / C IN)

Includes frame and connectors listed. Modules and cables ordered separately.

NOTE: Replacement parts in frame are also available by special order. See pages 39 and 40

ITEM NUMBER	DESCRIPTION
AC1240F*	Female 240 VAC twist-lock power input connector (mates with male frame power input)
AC1524M*	Male 240 VAC power output connector (mates with female frame power outputs)
M2MJ*	Thermocouple mini-plug mates with frame as jack strip connector
PTC-2-TBG-TS	2 zone, pre-wired terminal mounting box with terminal strip (mounts to mold; mates with PTC-0110 or PTC-0120 cables)

* Included with MFFPR-2G

FRAME DIMENSIONS:
7"W x 9"H x 10"D
(9"H dimension does not include connectors or handle)

ITEM NUMBER
PTC0110
PTC0120

For use with MFFPR-2G only

Armored Mold Power-Thermocouple Cables (15 AMP)

Single-Zone Mold Power-Thermocouple Cable is constructed of special lead wire for use in high temperature environments. This cable connects the mainframe to the connector on the mold. Available in lengths of 10 or 20 feet. Retaining latches on the mold connector provide secure cable connections.

ITEM NUMBER
PTC-2-TBG-TS

For use with MFFPR-2G only

Terminal Mounting Boxes - Prewired (15 AMP)

Terminal Mounting Boxes provide the easiest and most economical method of mounting power and thermocouple connectors on the mold. Constructed of plated heavy gauge steel, each box is precut and drilled for quick mounting of the box to the mold (2-zone, prewired terminal mounting box with terminal strip shown with cover plate removed).

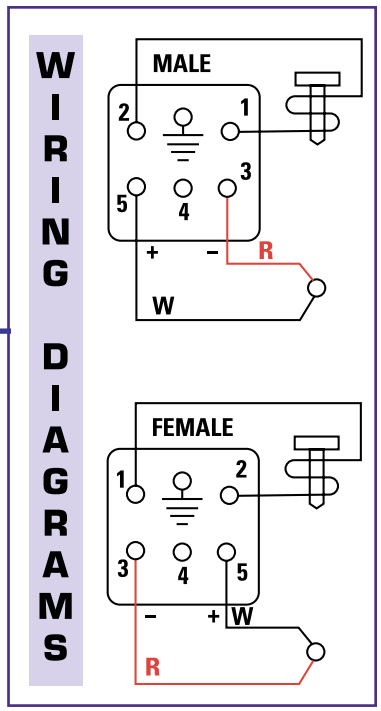

NOTE: 6-pin connectors and pins are available as a special order only. These are crimp contacts. (See pages 31-32 for mounting dimensions.)

Smart Series® Single Zone High Power Mainframes (30 AMP Max.)

MFHP-1G

FRAME DIMENSIONS:
7"W x 9"H x 10"D
(9"H dimension does not include connectors or handle)

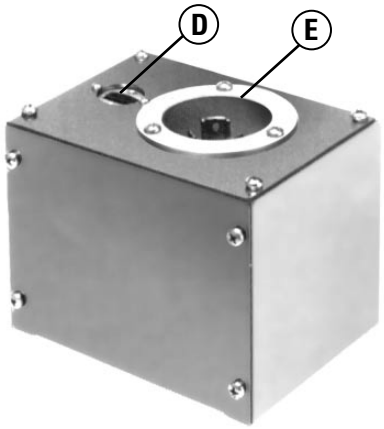

TERMINAL MOUNTING BOX PTCH1-TBG
(Connectors shown are ordered separately)
D: TCS-1
E: AC1240MI

The D-M-E Portable Single-Zone High Power Mainframe is designed for use with 30 AMP Smart Series or G-Series temperature control modules. Mainframe is supplied with built-in cooling fan, power input, power output, and thermocouple input connectors. Circuit breaker provides safety for the operator. Control modules and cable are ordered separately.

Single Zone 30 AMP Mainframes (240 VAC, 50-60 Hz, Single Phase)

ITEM NUMBER	WATTS (OUTPUT)	CONNECTORS SUPPLIED
MFHP-1G	7200	(1) AC1240F (POWER IN) (1) AC1240M (POWER OUT) (1) M2MJ (T / C IN)

Replacement Connectors and Accessories

ITEM NUMBER	DESCRIPTION
MPCH1-10	10 ft. mold power cable (240 VAC) (1 AC1240F twist-lock connector on mold end; 1 AC1240M twist-lock connector on frame end)
MPCH1-20	20 ft. mold power cable (240 VAC) (same connectors as MPCH1-10)
AC1240MI	1-Zone twist-lock mold power input connector (mounts in mold or terminal mounting box; accepts AC1240F twist-lock connector on MPCH1-10 or MPCH1-20 cable)
TC1-10	10 ft. thermocouple cable (1 M2MJ mini-plug each end)
TC1-20	20 ft. thermocouple cable (1 M2MJ mini-plug each end)
AC1240F*	240 VAC twist-lock power input connector (mates with frame power input)
AC1240M*	240 VAC twist-lock power output connector (mates with frame power output)
M2MJ*	thermocouple mini-plug (mates with frame or jack strip connector)
PTCH1-TBG	terminal mounting box (mounts to mold; accepts 1 AC1240MI and 1 TCS-1)
TCS-1	jack strip connector

*Included with MFHP-1G mainframe

TERMINAL MOUNTING BOX PTCH1-TBG

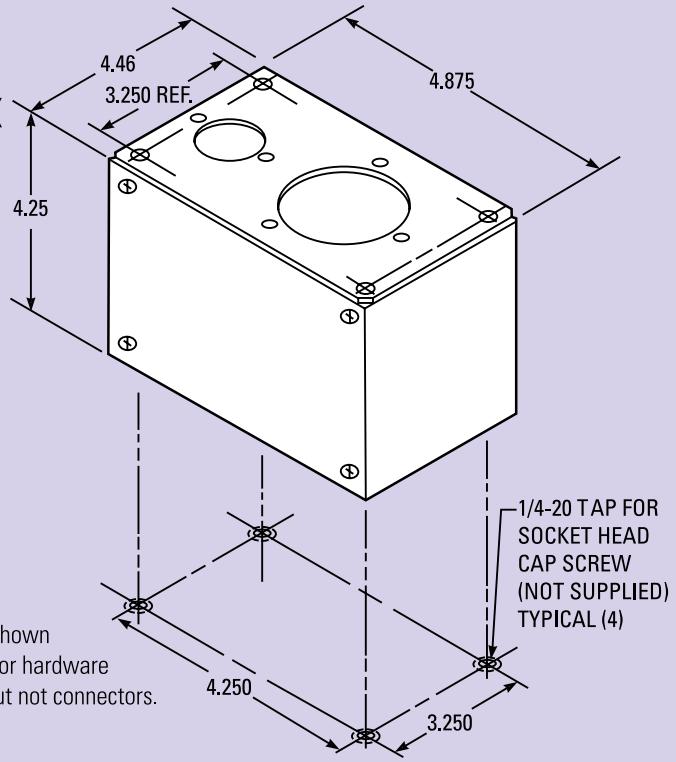

NOTE: Overall dimensions shown include allowances for hardware (assembly screws) but not connectors.

Smart Series® Mainframes (15 AMP)

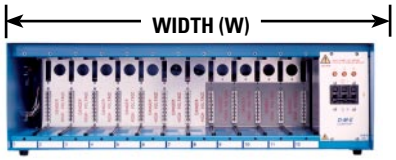

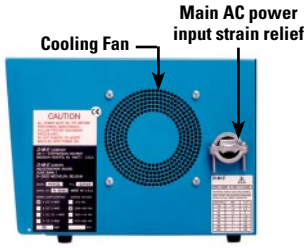

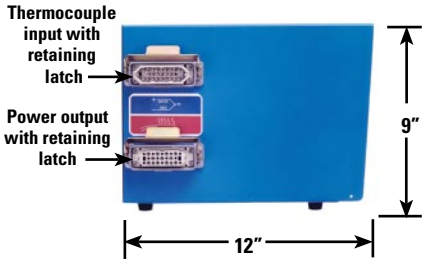

Smart Series® Mainframe (15 AMP Max.) Configurations

The 12 configurations illustrated below provide a wide selection of zone capacities to suit most control applications. The 5-, 8- and 12-zone frames (MFP5, 8, and 12 G) use individual frame sections. The 16 thru 48 zone frames use 2, 3, or 4 frame sections rigidly fastened together into one prewired integral unit which requires only one main AC power input connection. The Current Voltage monitor option will be factory installed when ordered at same time as Mainframe. Control modules, cables, mold connectors and other accessories are ordered separately (see table on p.19).

MAINFRAMES (Supplied with 50 AMP, 3-phase circuit breaker)

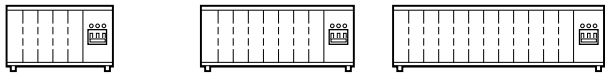

STACK FRAMES (Supplied with 70 AMP, 3-phase circuit breaker)

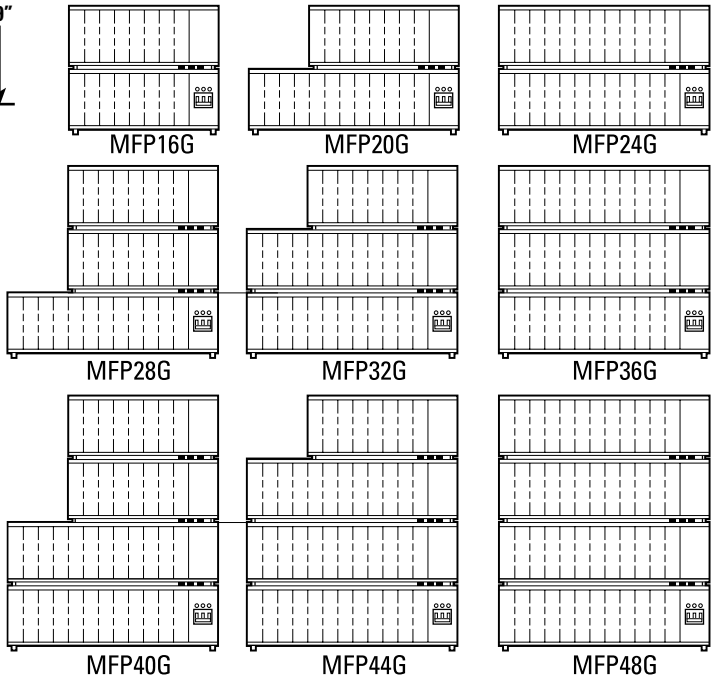

- Each frame section (MFP5G, MFP8G, and MFP12G) has its own cooling fan.
- Multi-section frame heights are multiples of 9" height shown (e.g. MFP32G is 27" high).
- Main AC input shown will always be in bottom frame section. For higher power requirements, individual power inputs and circuit breakers can be factory installed in each section of a stack frame on a special order basis.

WORLDWIDE WIRING CAPABILITIES

Unless otherwise specified, all Smart Series Mainframes will be supplied to accept 240 VAC, 3 phase, 4-wire, 50-60 Hz input power. Wiring diagram (included on the access cover) illustrates the variety of other voltage, phase and load balancing arrangements possible, such as: (380-415V, 3 phase, 5-wire, 50-60 Hz), (208-240V, single phase, 3-wire, 50-60 Hz) and (110-120V, single phase, 3-wire, 50-60 Hz). **These wiring adjustments can be performed in the field to suit the requirements of the application. If specified at the time of original order, D-M-E will supply the Mainframe required.**

ITEM NUMBERS	W*
MFP5G	14 3/16
MFP8G	20 3/16
MFP12G	28 3/16

*Dimension does not include connectors

NOTE: Combination frames to accommodate both 15 and 30 AMP modules (with or without communications) are available by special order.

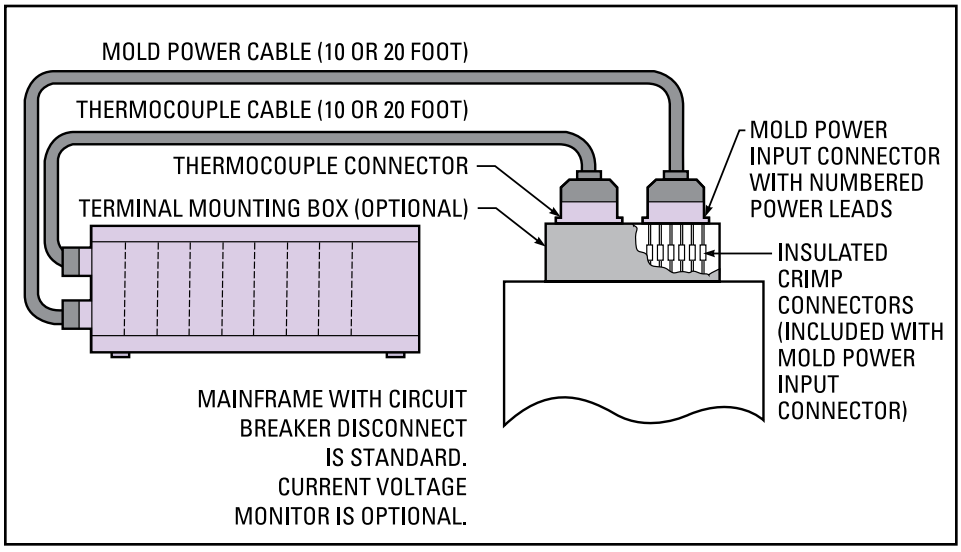

Smart Series® Mainframes (15 AMP)

SMART SERIES MAINFRAMES Optional Current Voltage Monitor is Factory Installed in CV-Style Frames					CABLES AND MOLD CONNECTORS REQUIRED (Not Included with Mainframes and Must Be Ordered Separately)							
ZONES	"MFP" TYPE FOR TEMPERATURE AND POWER CONTROL	"MFP" TYPE WITH CURRENT VOLTAGE MONITOR	"MFCP" TYPE FOR TEMP. CONTROL AND COMMUNICATIONS	"MFCP" TYPE WITH CURRENT VOLTAGE MONITOR	MOLD POWER CABLES C10 = 10 FT. C20 = 20 FT. (SELECT LENGTH DESIRED)		THERMOCOUPLE CABLES C10 = 10 FT. C20 = 20 FT. (SELECT LENGTH DESIRED)		MOLD POWER INPUT CONNECTORS (INCL. CRIMP CONNECTORS)		THERMOCOUPLE CONNECTORS	
	ITEM NUMBER	ITEM NUMBER (CV-STYLE)	ITEM NUMBER	ITEM NUMBER (CV-STYLE)	QTY.	ITEM NUMBER	QTY.	ITEM NUMBER	QTY.	ITEM NUMBER	QTY.	ITEM NUMBER
5	MFP5G	MFP5G-CV	MFCP5G	MFCP5G-CV	1	MPC5-C10 or C20-G	1	TC5-C10 or C20-G	1	PIC5G	1	MTC5G
8	MFP8G	MFP8G-CV	MFCP8G	MFCP8G-CV	1	MPC8-C10 or C20-G	1	TC8-C10 or C20-G	1	PIC8G	1	MTC8G
12	MFP12G	MFP12G-CV	MFCP12G	MFCP12G-CV	1	MPC12-C10 or C20-G	1	TC12-C10 or C20-G	1	PIC12G	1	MTC12G
16	MFP16G	MFP16G-CV	MFCP16G	MFCP16G-CV	2	MPC8-C10 or C20-G	2	TC8-C10 or C20-G	2	PIC8G	2	MTC8G
20	MFP20G	MFP20G-CV	MFCP20G	MFCP20G-CV	1	MPC8-C10 or C20-G and	1	TC8-C10 or C20-G and	1	PIC8G and	1	MTC8G and
					1	MPC12-C10 or C20-G	1	TC12-C10 or C20-G	1	PIC12G	1	MTC12G
24	MFP24G	MFP24G-CV	MFCP24G	MFCP24G-CV	2	MPC12-C10 or C20-G	2	TC12-C10 or C20-G	2	PIC12G	2	MTC12G
28	MFP28G	MFP28G-CV	MFCP28G	MFCP28G-CV	2	MPC8-C10 or C20-G and	2	TC8-C10 or C20-G and	2	PIC8G and	2	MTC8G and
					1	MPC12-C10 or C20-G	1	TC12-C10 or C20-G	1	PIC12G	1	MTC12G
32	MFP32G	MFP32G-CV	MFCP32G	MFCP32G-CV	1	MPC8-C10 or C20-G and	1	TC8-C10 or C20-G and	1	PIC8G and	1	MTC8G and
					2	MPC12-C10 or C20-G	2	TC12-C10 or C20-G	2	PIC12G	2	MTC12G
36	MFP36G	MFP36G-CV	MFCP36G	MFCP36G-CV	3	MPC12-C10 or C20-G	3	TC12-C10 or C20-G	3	PIC12G	3	MTC12G
40	MFP40G	MFP40G-CV	MFCP40G	MFCP40G-CV	2	MPC8-C10 or C20-G and	2	TC8-C10 or C20-G and	2	PIC8G and	2	MTC8G and
					2	MPC12-C10 or C20-G	2	TC12-C10 or C20-G	2	PIC12G	2	MTC12G
44	MFP44G	MFP44G-CV	MFCP44G	MFCP44G-CV	1	MPC8-C10 or C20-G and	1	TC8-C10 or C20-G and	1	PIC8G and	1	MTC8G and
					3	MPC12-C10 or C20-G	3	TC12-C10 or C20-G	3	PIC12G	3	MTC12G
48	MFP48G	MFP48G-CV	MFCP48G	MFCP48G-CV	4	MPC12-C10 or C20-G	4	TC12-C10 or C20-G	4	PIC12G	4	MTC12G

NOTE: For details on cables and connectors, see pages 26-28.

TERMINAL MOUNTING BOXES

ZONES	ORDER ITEMS A and B or C					
	(A) FOR POWER INPUT CONNECTORS		(B) FOR THERMOCOUPLE CONNECTORS		(C) COMBINATION POWER & TC	
	QTY.	ITEM NUMBER	QTY.	ITEM NUMBER	QTY.	ITEM NUMBER
5	1	PIC512-TBG	1	MTC5-TBG	1	PTC5-TBG
8	1	PIC512-TBG	1	MTC8-TBG	1	PTC8-TBG
12	1	PIC512-TBG	1	MTC12-TBG	1	PTC12-TBG
16	2	PIC512-TBG	2	MTC8-TBG	2	PTC8-TBG
20	2	PIC512-TBG	1	MTC8-TBG and	1	PTC8-TBG and
			1	MTC12-TBG	1	PTC12-TBG
24	2	PIC512-TBG	2	MTC12-TBG	2	PTC12-TBG
28	3	PIC512-TBG	2	MTC8-TBG and	2	PTC8-TBG and
			1	MTC12-TBG	1	PTC12-TBG

ZONES	ORDER ITEMS A and B or C					
	(A) FOR POWER INPUT CONNECTORS		(B) FOR THERMOCOUPLE CONNECTORS		(C) COMBINATION POWER & TC	
	QTY.	ITEM NUMBER	QTY.	ITEM NUMBER	QTY.	ITEM NUMBER
32	3	PIC512-TBG	1	MTC8-TBG and	1	PTC8-TBG and
			2	MTC12-TBG	2	PTC12-TBG
36	3	PIC512-TBG	3	MTC12-TBG	3	PTC12-TBG
40	4	PIC512-TBG	2	MTC8-TBG and	2	PTC8-TBG and
			2	MTC12-TBG	2	PTC12-TBG
44	4	PIC512-TBG	1	MTC8-TBG and	1	PTC8-TBG and
			3	MTC12-TBG	3	PTC12-TBG
48	4	PIC512-TBG	4	MTC12-TBG	4	PTC12-TBG

NOTES: Combination terminal mounting boxes are available with connectors prewired to terminal strips. See page 31 for details. See page 32 for dimensional details. For below flush mounting of connectors, see mold pocket layouts on pages 29-30. See page 21 for current voltage monitor.

Smart Series® High Power Mainframes (30 AMP)

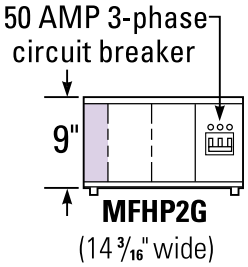

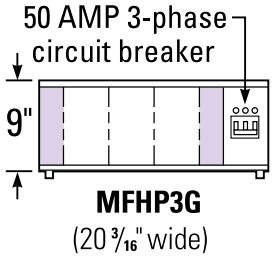

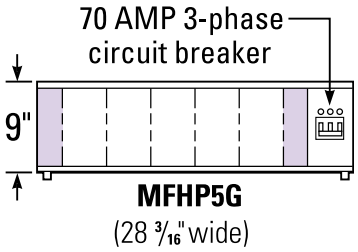

DIMENSIONS ABOVE DO NOT INCLUDE CONNECTORS

all frames are 12" deep

NOTE: Blank panels cover unused zones in frames (shaded panels above). For communications (MFCHP) type frames, these zones may be used for communications modules.

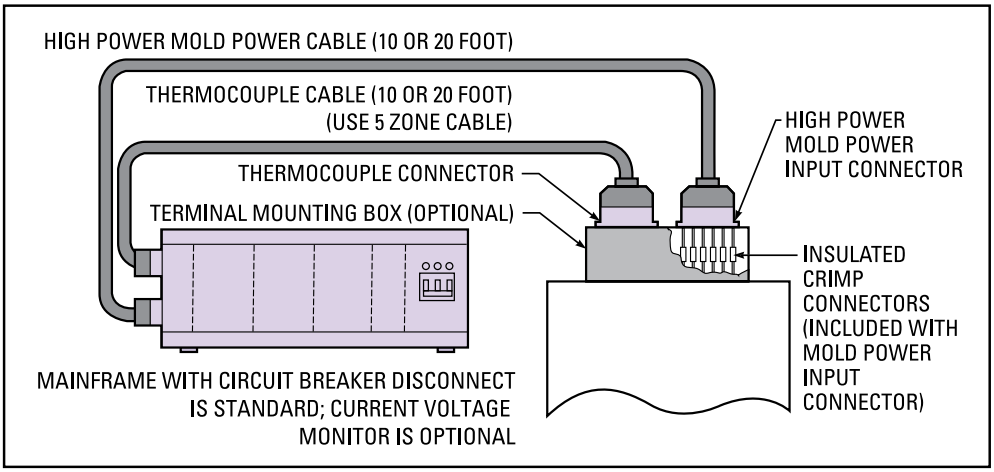

The 3 configurations illustrated at left provide 2, 3 or 5-zones of 30 AMP control for higher wattage heater applications. The Current Voltage monitor option will be factory installed when ordered at the same time as Mainframe. Control modules, cables, mold connectors and other accessories are ordered separately.

ZONES	SMART SERIES HIGH POWER MAINFRAMES OPTIONAL CURRENT VOLTAGE MONITOR IS FACTORY INSTALLED IN CV-STYLE FRAMES			
	"MFHP" TYPE FOR TEMPERATURE CONTROL	"MFHP" TYPE WITH CURRENT VOLTAGE MONITOR	"MFCHP" TYPE FOR TEMP. CONTROL AND COMMUNICATIONS	"MFCHP" TYPE WITH CURRENT VOLTAGE MONITOR
	ITEM NUMBER	ITEM NUMBER (CV-STYLE)	ITEM NUMBER	ITEM NUMBER (CV-STYLE)
2	MFHP2G	MFHP2G-CV	MFCHP2G	MFCHP2G-CV
3	MFHP3G	MFHP3G-CV	MFCHP3G	MFCHP3G-CV
5	MFHP5G	MFHP5G-CV	MFCHP5G	MFCHP5G-CV

ZONES	CABLES AND MOLD CONNECTORS REQUIRED (NOT INCLUDED WITH MAINFRAMES)							
	MOLD POWER CABLES C10 = 10 FT. C20 = 20 FT. (SELECT LENGTH DESIRED)		THERMOCOUPLE CABLES C10 = 10 FT. C20 = 20 FT. (SELECT LENGTH DESIRED)		MOLD POWER INPUT CONNECTORS (INCL. CRIMP CONNECTORS)		THERMOCOUPLE CONNECTORS	
	QTY.	ITEM NUMBER	QTY.	ITEM NUMBER	QTY.	ITEM NUMBER	QTY.	ITEM NUMBER
2	1	MPCH23-C10 or C20-G	1	TC5-C10 or C20-G	1	PICH23G	1	MTC5G
3	1	MPCH23-C10 or C20-G	1	TC5-C10 or C20-G	1	PICH23G	1	MTC5G
5	1	MPCH5-C10 or C20-G	1	TC5-C10 or C20-G	1	PICH5G	1	MTC5G

NOTE: For details on cables and connectors, see pages 26-28.

NOTE: Combination frames to accommodate both 15 and 30 AMP modules (with or without communications) are available by special order.

TERMINAL MOUNTING BOXES

ZONES	ORDER ITEMS A and B or C					
	(A) FOR POWER INPUT CONNECTORS		(B) FOR THERMOCOUPLE CONNECTORS		(C) COMBINATION POWER & TC	
	QTY.	ITEM NUMBER	QTY.	ITEM NUMBER	QTY.	ITEM NUMBER
2	1	PICH23-TBG	1	MTC5-TBG	1	PTCH23-TBG
3	1	PICH23-TBG	1	MTC5-TBG	1	PTCH23-TBG
5	1	PICH5-TBG	1	MTC5-TBG	1	PTCH5-TBG

NOTE: See page 31-32 for dimensional details. For below-flush mounting of connectors, see mold pocket layouts on pages 29-30.

Smart Series® Digital Current/Voltage Monitor

Streamlined Design For Improved Performance

The new Current/Voltage Monitor is simple to operate and features a large easy-to-read digital display. Ease of operation has been enhanced by streamlining the unit and eliminating unnecessary switches and controls. When setting the selector switch to the desired zone number, the 'AMPS' function is selected. The meter will then display the amount of current being delivered by the selected module. Input voltage to the system can be measured by rotating the selector switch to one of the three 'line voltage' positions. This will set the meter in the 'voltage' function and display the voltage of the selected phase.

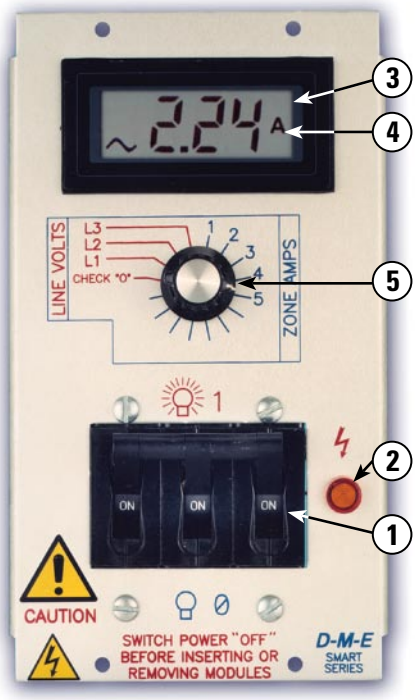

Current Supply To Each Zone

To monitor the current supply to each zone, simply set the rotary selector switch to the desired module zone number. The "AMPS" function is then automatically selected and is indicated by the letter 'A' just to the right of the numbers in the display window. The meter displays the current being delivered to the heater load in amperes.

Input Voltage From Each Phase

Set the rotary selector to the desired phase voltage position. This automatically selects the 'volts' function which is indicated when the letter 'V' appears to the right of the numbers in the display window. The meter will display the line voltage of the selected phase.

1. **CIRCUIT BREAKER/DISCONNECT** – Applies or removes power to all modules in the frame.
2. **POWER ON LIGHT (amber)** – Illuminates when CIRCUIT BREAKER is in the ON position.
3. **AMPS/VOLTS METER** – Digital multi-scale meter provides accurate readings of zone current (AMPS) or input voltage (VOLTS).
4. **AMPS/VOLTS INDICATOR** – Appears automatically when either AMPS or VOLTS is selected.
5. **SELECTOR SWITCH** – Multi-position switch automatically selects zone current or phase line voltage to be monitored. For systems with more than 12-zones, additional meter and selector switch panels are supplied.

Specifications

Voltmeter Range	190 to 290 VAC (for 240 volt systems) 90 to 145 VAC (for 120 volt systems)
Voltmeter Accuracy	± 3% of reading, 50 to 60 Hz
Maximum Voltmeter Input	400 VAC
Input Voltage	240/120 VAC, 50 to 60 Hz
Ammeter Range	0 to 2; 0 to 30; 0 to 40 Amperes
Ammeter Accuracy	± 2% @ 0 to 100% Duty Cycle, 50-60 Hz
Maximum Ammeter Input	30 Amperes

NOTE: The Digital Current/Voltage Monitor is a factory installed option which replaces the standard circuit breaker/disconnect, and is supplied when "CV-style" mainframes are ordered.

See pages 19 and 20 for appropriate mainframe item numbers.

Smart Series® Accessories

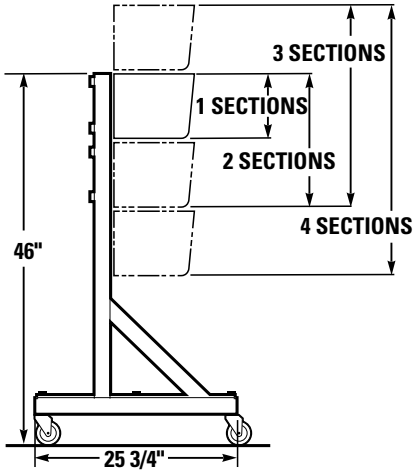

Universal Floor Stand

The Universal Floor Stand will accommodate all 15 or 30 amp Mainframes from one to four sections high. Stand is made from heavy gauge steel and includes locking casters (400 lb. rating). All assembly and Mainframe mounting hardware is included. Heavy duty floor stand available for larger systems (1000 lb. rating).

ITEM NUMBER	RATING
MFS-512-G	400 LBS
MFS-512-G-HD*	1000 LBS

*HD stand not shown.
Floor stand comes with plates for 5-zone frame mounting on 8-zone "x" pattern

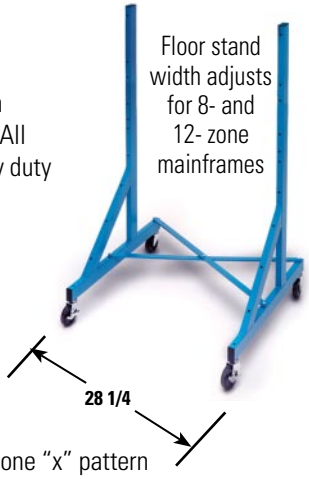

Step-Down Transformer Kits (from 480 VAC to 240 VAC)

Transformer Kits are pre-wired and include enclosed transformer (480 VAC input, 240 VAC output) with adjustable transformer voltage taps, one 10-foot cable for AC power-in (no connector), one 6-foot cable for mainframe (AC input), one safety switch, two extra fuses, floor stand (MFS-512-G) and all mounting brackets and hardware required. Shipped with instructions for easy assembly.

Single section frames mount to front or rear of stand.

ITEM NUMBER	POWER CAPACITY
TK6-1A-G	6 KVA
TK9-1A-G*	9 KVA
TK15-1A-G*	15 KVA
TK30-1A-G**	30 KVA

Mainframe not included.
Adapter plates for narrower frames available by special order.
* Comes with plates for mounting 8-zone on 12-zone "x" pattern
** Supplied with MFS-512-G-HD for this transformer size or large and transformers mounted flat.

NOTE: Power capacity needed depends on total load of system (i.e. number of zones and heater load per zone).

Also Available:

1. Transformer only
2. Transformer and cables only
3. Transformers with other voltage or current capacities
4. Isolation Transformers

Contact D-M-E for details and prices.

Mainframe Blank Panels

Used. to cover unused zones in mainframes. Push-pull fasteners included in panel. **MFBP10G** covers one 15 AMP zone; **MFBP30G** covers one 30 AMP zone (or two 15 AMP zones).

ITEM NUMBER
MFBP10G
MFBP30G

Module Replacement Fuses

(sold in packages of 5)

ITEM NUMBER	AMPS
ABC-1	1
ABC-15	15
ABC-10	10
13X-10	10
13X-15	15

Insulated Crimp Connectors

For connection of mold power input connector leads to heater leads. (195˚F / 90˚C maximum temperature)

ITEM NUMBER	AMPS	WIRE GAUGE
HWCC-1 (Bag of 30)	10-15	16-22 RED
HWCC-3 (Bag of 30)	10-15	14-16 BLUE
HWCC-2 (Bag of 20)	15-30	10-12 YELLOW

NOTE: Initial supply is provided with mold power input connectors.

Smart Series® Mainframe Connector Wiring

STANDARD MAINFRAME CONNECTOR WIRING

Side of Mainframe

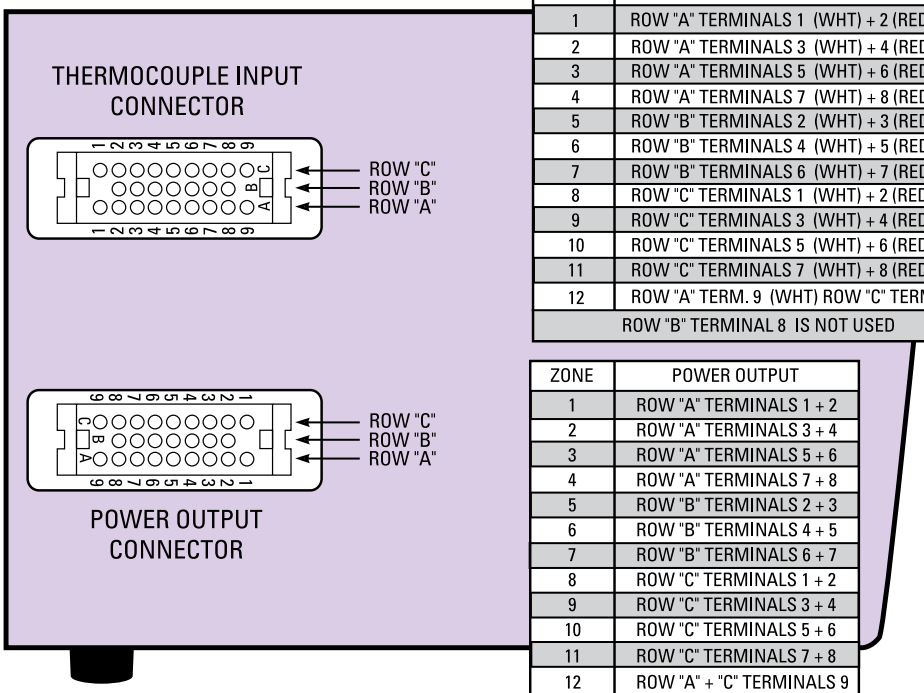

ZONE	THERMOCOUPLE INPUT
1	ROW "A" TERMINALS 1 (WHT) + 2 (RED)
2	ROW "A" TERMINALS 3 (WHT) + 4 (RED)
3	ROW "A" TERMINALS 5 (WHT) + 6 (RED)
4	ROW "A" TERMINALS 7 (WHT) + 8 (RED)
5	ROW "B" TERMINALS 2 (WHT) + 3 (RED)
6	ROW "B" TERMINALS 4 (WHT) + 5 (RED)
7	ROW "B" TERMINALS 6 (WHT) + 7 (RED)
8	ROW "C" TERMINALS 1 (WHT) + 2 (RED)
9	ROW "C" TERMINALS 3 (WHT) + 4 (RED)
10	ROW "C" TERMINALS 5 (WHT) + 6 (RED)
11	ROW "C" TERMINALS 7 (WHT) + 8 (RED)
12	ROW "A" TERM. 9 (WHT) ROW "C" TERM. 9 (RED)
ROW "B" TERMINAL 8 IS NOT USED	

ZONE	POWER OUTPUT
1	ROW "A" TERMINALS 1 + 2
2	ROW "A" TERMINALS 3 + 4
3	ROW "A" TERMINALS 5 + 6
4	ROW "A" TERMINALS 7 + 8
5	ROW "B" TERMINALS 2 + 3
6	ROW "B" TERMINALS 4 + 5
7	ROW "B" TERMINALS 6 + 7
8	ROW "C" TERMINALS 1 + 2
9	ROW "C" TERMINALS 3 + 4
10	ROW "C" TERMINALS 5 + 6
11	ROW "C" TERMINALS 7 + 8
12	ROW "A" + "C" TERMINALS 9
ROW "B" TERMINAL 8 IS NOT USED	

NOTE:
1. Mating cable connectors are wired the same as frame connectors shown.
2. Wires in frames are color coded for reference when rewiring of frame connectors is necessary (see owner's manual).
3. All grounds must be connected to ensure operator safety.

HIGH POWER MAINFRAME CONNECTOR WIRING

Side of Mainframe

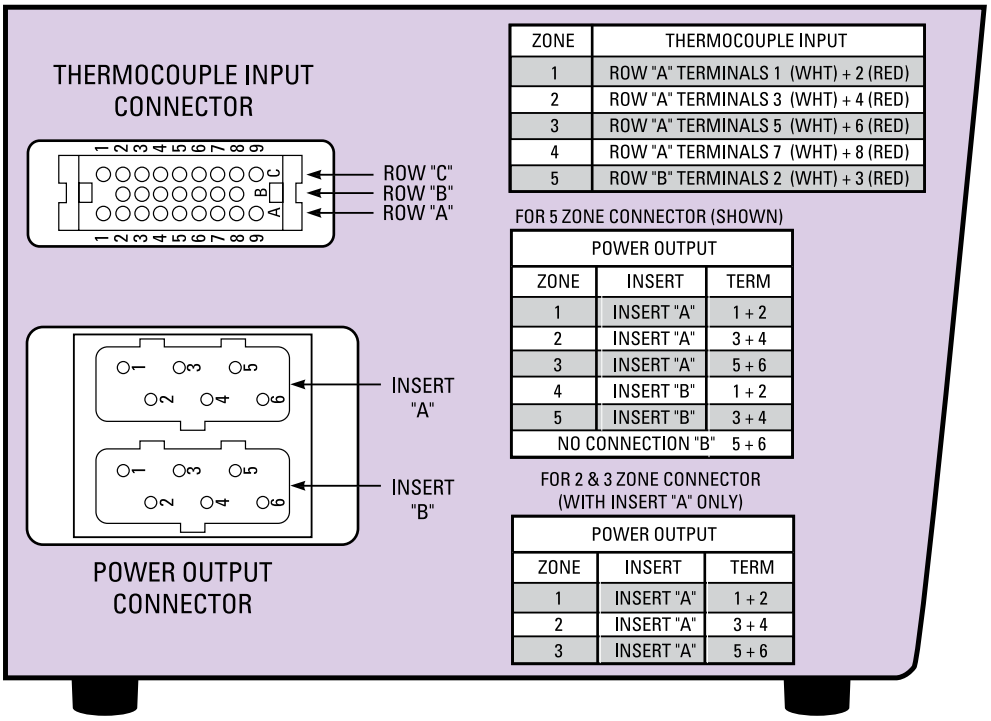

ZONE	THERMOCOUPLE INPUT
1	ROW "A" TERMINALS 1 (WHT) + 2 (RED)
2	ROW "A" TERMINALS 3 (WHT) + 4 (RED)
3	ROW "A" TERMINALS 5 (WHT) + 6 (RED)
4	ROW "A" TERMINALS 7 (WHT) + 8 (RED)
5	ROW "B" TERMINALS 2 (WHT) + 3 (RED)

FOR 5 ZONE CONNECTOR (SHOWN)

POWER OUTPUT		
ZONE	INSERT	TERM
1	INSERT "A"	1 + 2
2	INSERT "A"	3 + 4
3	INSERT "A"	5 + 6
4	INSERT "B"	1 + 2
5	INSERT "B"	3 + 4
NO CONNECTION "B"		5 + 6

FOR 2 & 3 ZONE CONNECTOR (WITH INSERT "A" ONLY)

POWER OUTPUT		
ZONE	INSERT	TERM
1	INSERT "A"	1 + 2
2	INSERT "A"	3 + 4
3	INSERT "A"	5 + 6

Wiring Diagram for D-M-E Hot Runner Molding System with Smart Series® Mold Connectors

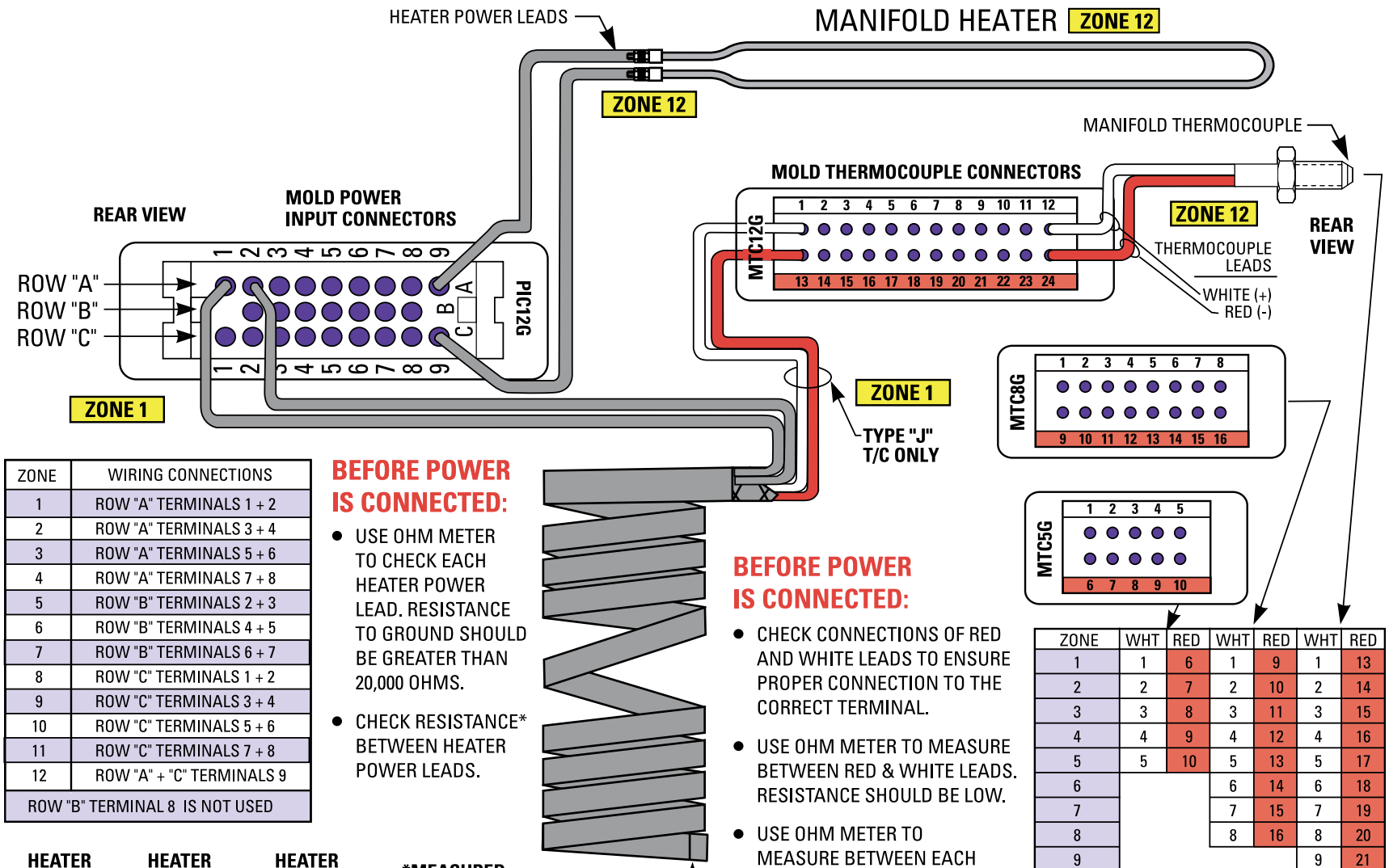

ZONE	WIRING CONNECTIONS
1	ROW "A" TERMINALS 1 + 2
2	ROW "A" TERMINALS 3 + 4
3	ROW "A" TERMINALS 5 + 6
4	ROW "A" TERMINALS 7 + 8
5	ROW "B" TERMINALS 2 + 3
6	ROW "B" TERMINALS 4 + 5
7	ROW "B" TERMINALS 6 + 7
8	ROW "C" TERMINALS 1 + 2
9	ROW "C" TERMINALS 3 + 4
10	ROW "C" TERMINALS 5 + 6
11	ROW "C" TERMINALS 7 + 8
12	ROW "A" + "C" TERMINALS 9
ROW "B" TERMINAL 8 IS NOT USED	

BEFORE POWER IS CONNECTED:

- USE OHM METER TO CHECK EACH HEATER POWER LEAD. RESISTANCE TO GROUND SHOULD BE GREATER THAN 20,000 OHMS.
- CHECK RESISTANCE* BETWEEN HEATER POWER LEADS.

HEATER VOLTS MARKED ON HEATER X **HEATER** VOLTS MARKED ON HEATER ÷ **HEATER** WATTS MARKED ON HEATER ≅ ***MEASURED RESISTANCE OHMS**

240 VOLTS X 240 VOLTS ÷ 820 WATTS ≅ 70 OHMS

BEFORE POWER IS CONNECTED:

- CHECK CONNECTIONS OF RED AND WHITE LEADS TO ENSURE PROPER CONNECTION TO THE CORRECT TERMINAL.
- USE OHM METER TO MEASURE BETWEEN RED & WHITE LEADS. RESISTANCE SHOULD BE LOW.
- USE OHM METER TO MEASURE BETWEEN EACH HEATER POWER LEAD AND EACH THERMOCOUPLE LEAD. RESISTANCE SHOULD BE GREATER THAN 20,000 OHMS.

ZONE	WHT	RED	WHT	RED	WHT	RED
1	1	6	1	9	1	13
2	2	7	2	10	2	14
3	3	8	3	11	3	15
4	4	9	4	12	4	16
5	5	10	5	13	5	17
6			6	14	6	18
7			7	15	7	19
8			8	16	8	20
9					9	21
10					10	22
11					11	23
12					12	24

NOTES: All grounds must be connected to mold to ensure operator safety.
All crimp connections can be eliminated by using terminal mounting box with terminal strip. See page 31.

Wiring Diagram for D-M-E Hot Runner Molding System with High Power Smart Series® Mold Connectors

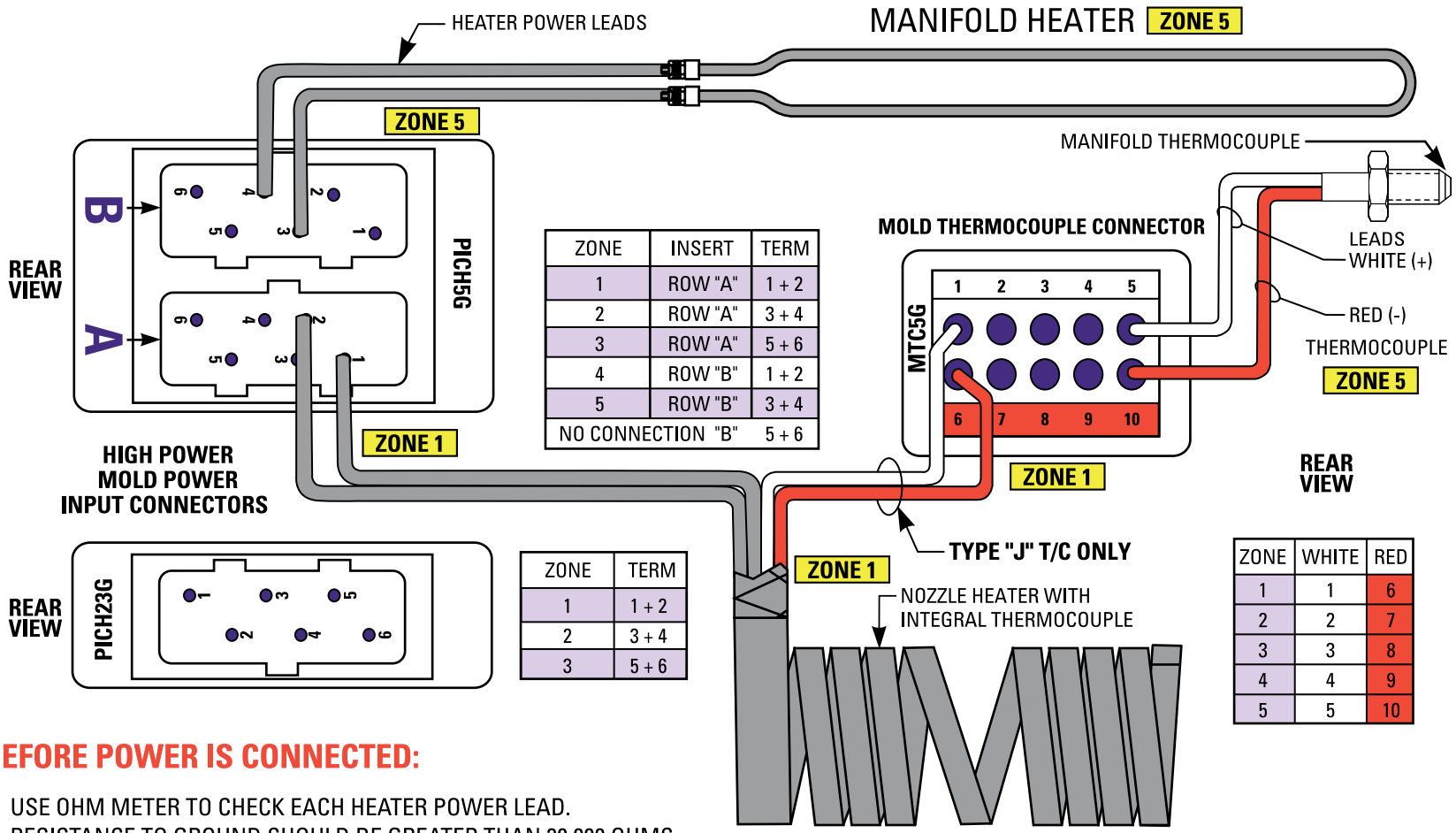

ZONE	INSERT	TERM
1	ROW "A"	1 + 2
2	ROW "A"	3 + 4
3	ROW "A"	5 + 6
4	ROW "B"	1 + 2
5	ROW "B"	3 + 4
NO CONNECTION "B"		5 + 6

ZONE	TERM
1	1 + 2
2	3 + 4
3	5 + 6

ZONE	WHITE	RED
1	1	6
2	2	7
3	3	8
4	4	9
5	5	10

BEFORE POWER IS CONNECTED:

- USE OHM METER TO CHECK EACH HEATER POWER LEAD. RESISTANCE TO GROUND SHOULD BE GREATER THAN 20,000 OHMS.
- CHECK RESISTANCE* BETWEEN HEATER POWER LEADS.

HEATER VOLTS MARKED ON HEATER X **HEATER** VOLTS MARKED ON HEATER ÷ **HEATER** WATTS MARKED ON HEATER ≅ ***MEASURED RESISTANCE OHMS**

240 VOLTS X 240 VOLTS ÷ 820 WATTS ≅ 70 OHMS

BEFORE POWER IS CONNECTED:

- CHECK CONNECTIONS OF RED AND WHITE LEADS TO ENSURE PROPER CONNECTION TO THE CORRECT TERMINAL.
- USE OHM METER TO MEASURE BETWEEN RED & WHITE LEADS. RESISTANCE SHOULD BE LOW.
- USE OHM METER TO MEASURE BETWEEN EACH HEATER POWER LEAD AND EACH THERMOCOUPLE LEAD. RESISTANCE SHOULD BE GREATER THAN 20,000 OHMS.

NOTES: All grounds must be connected to mold to ensure operator safety.
All crimp connections may be eliminated. Simply remove 6" leads form PIC connectors and wire directly.

Mold Power and Thermocouple Cables

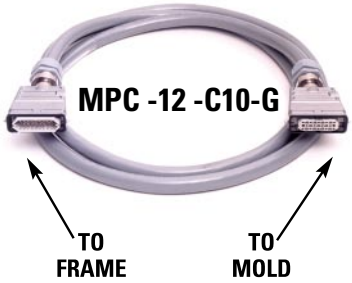

Mold Power Cables are used to connect the Mainframe to the Power Input Connector on the mold. Available in lengths of 10 or 20 feet. Integral retaining latches on both the frame and mold connectors provide secure cable connections. Connector configurations ensure proper insertion of cable. Cables are wired for 5, 8 or 12 zones (15 AMP) and 3 or 5 zones (30 AMP) for use with the appropriate Smart Series Mainframes and Mold Power Input Connectors.

Universal Mold Power Cable (15 AMP)

The MPC-12-C10 or 20-G Mold Power Cable also serves as a universal cable for connecting any 15 AMP Smart Series Mainframe to any 15 AMP Mold Power Input Connector. The maximum number of zones will be determined by the connector in the mold.

Mold Power Cables (15 AMP Max)

10 FOOT LONG	20 FOOT LONG	NUMBER OF ZONES (MAX.)	FOR CONNECTIONS	
ITEM NUMBER	ITEM NUMBER		FROM 15 AMP FRAME (S)	TO POWER INPUT CONNECTOR
MPC-5-C10-G	MPC-5-C20-G	5	5, 8, 12 ZONE	PIC-5-G
MPC-8-C10-G	MPC-8-C20-G	8	8, 12 ZONE	PIC-8-G
MPC-12-C10-G	MPC-12-C20-G	12	12 ZONE	PIC-12-G

Mold High Power Cables (30 AMP Max)

10 FOOT LONG	20 FOOT LONG	NUMBER OF ZONES (MAX.)	FOR CONNECTIONS	
ITEM NUMBER	ITEM NUMBER		FROM 30 AMP FRAME (S)	TO POWER INPUT CONNECTOR
MPCH-23-C10-G	MPCH-23-C20-G	3	2-3 ZONE	PICH-23-G
MPCH-5-C10-G	MPCH-5-C20-G	5	5 ZONE	PICH-5-G

SPECIAL CABLES

Virtually any type of Conversion or Special Cable configuration can be provided by special order.

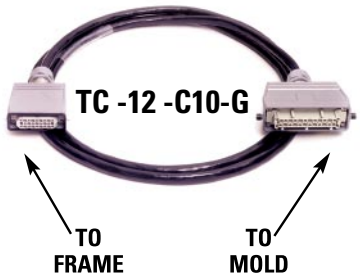

Thermocouple Cables are used to connect the Mainframe to the Thermocouple Connector on the mold, and are available in lengths of 10 or 20 feet. Integral retaining latches on both the frame and mold connectors provide secure cable connections. Connector configurations ensure proper insertion of cable. Cables available are wired for 5, 8 or 12 zones for use with the appropriate Smart Series Mainframes and Thermocouple Connectors.

Thermocouple Cables (for use with 15 or 30 AMP Mainframes)

These Thermocouple Cables serve as cables for connecting dissimilar Mainframes and Thermocouple Connectors. For example, the TC-8-C10-G could be used to connect a 12-zone frame to an 8-zone MTC-8-G connector. The maximum number of zones will be determined by the connector in the mold.

Thermocouple Cables

10 FOOT LONG	20 FOOT LONG	NUMBER OF ZONES (MAX.)	FOR CONNECTIONS	
ITEM NUMBER	ITEM NUMBER		FROM 15 AMP FRAME (S)	TO THERMOCOUPLE CONNECTOR
TC-5-C10-G*	TC-5-C20-G*	5	5, 8, 12 ZONE	MTC-5-G
TC-8-C10-G	TC-8-C20-G	8	8, 12 ZONE	MTC-8-G
TC-12-C10-G	TC-12-C20-G	12	12 ZONE	MTC-12-G

* Used with all 30 AMP Mainframes.

Mold Power Input Connectors

For 15 AMP Applications

PIC-5-G

PIC-8-G

PIC-12-G

For 30 AMP Applications

PICH-23-G

PICH-5-G

NOTES:
Connector PICH-23-G is dimensionally identical to thermocouple connector MTC-8-G. See page 28.

For PICH-23-G and PICH-5-G, direct wiring without crimp connectors is possible by removing 6" leads.

Mold Power Input Connectors are mounted on the mold to accept power cable(s) from the Mainframe. They are supplied with six inches of numbered leads and a ground wire. All three 15 AMP connectors are the same physical size and use 14-gauge wire. Only the number of active pins change. The 30 AMP connectors are supplied with 10-gauge leads and are attached to screw terminals. Each is equipped with an integral retaining latch to provide a secure cable connection. Connector configuration ensures proper insertion of cable. Splicing of 6" leads to heater power leads is easily accomplished with the Insulated Crimp Connectors supplied.

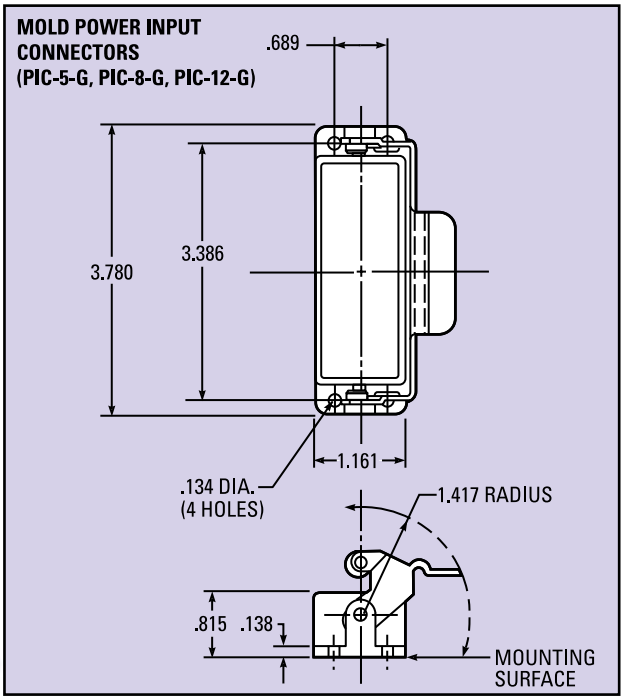

NOTE: Dimensions shown may vary slightly.

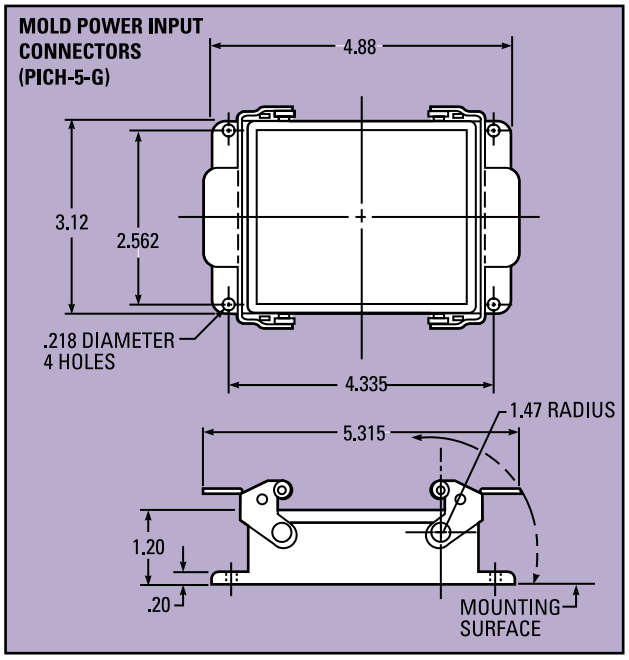

NOTE: Ground wire must be connected to mold to ensure operator safety.

Mold Power Input Connectors

ITEM NUMBER	NUMBER OF ZONES (MAX.)	AMPS (MAX.) PER ZONE
PIC-5-G	5	15
PIC-8-G	8	15
PIC-12-G	12	15
PICH-23-G	3	30
PICH-5-G	5	30

NOTE: Replacement parts and extraction tools can be found on page 40.

Insulated Crimp Connectors

ITEM NUMBER	AMPS	FOR WIRE GAUGE
HWCC-1 30 PCS.	10-15	16-22
HWCC-3 30 PCS.	15	14-16
HWCC-2 20 PCS.	30	10-12

NOTE: Initial supply is provided with mold power input connectors. Also, see page 22.

Mold Thermocouple Connectors

MTC-5-G

MTC-8-G

MTC-12-G

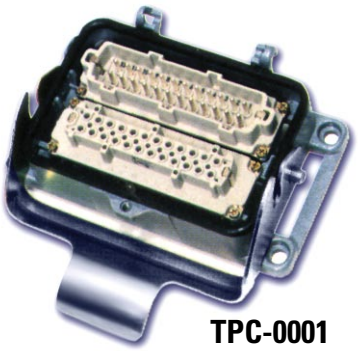

TPC-0001

Thermocouple Connectors are mounted on the mold to use with thermocouple cable(s) from the Mainframe. Screw type terminals for use with iron(+) and constantan(-) thermocouple leads are numbered and coded on the side and bottom of each connector. All three connectors are equipped with integral retaining latches to provide a secure cable connection. Connector configuration ensures proper insertion of cable. Pins are made of copper alloy and are silver plated. Experience has proven that iron and constantan are not required.

ITEM NUMBER	NUMBER OF PINS	DIMENSION	
		M2	H
MTC-5-G	10	3.268	3.662
MTC-8-G	16	4.055	4.449
MTC-12-G	24	5.118	5.512
TPC-0001	48	5.827	6.496

NOTE: MOLD POWER INPUT CONNECTOR PICH-23-G IS DIMENSIONALLY IDENTICAL TO MTC-8-G

MOLD THERMOCOUPLE CONNECTOR
MTC-5-G MTC-5-G-IDC
MTC-8-G MTC-8-G-IDC
MTC-12-G MTC-12-G-IDC

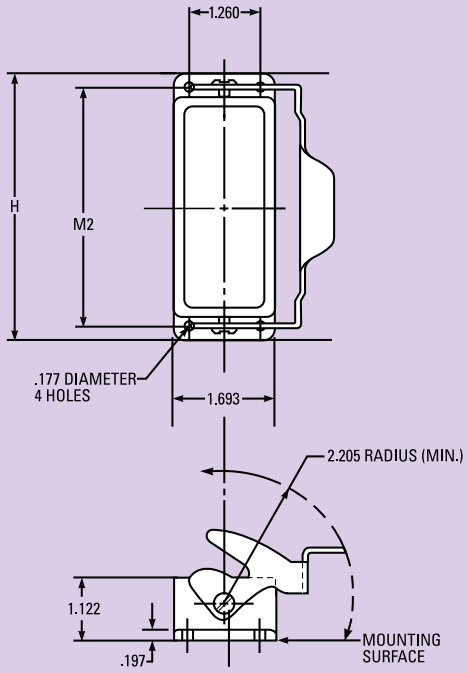

NOTE: DIMENSIONS SHOWN ARE FOR THE MTC5-G, MTC8-G AND MTC12-G CONNECTORS

MOLD POWER AND THERMOCOUPLE CONNECTOR TPC-0001

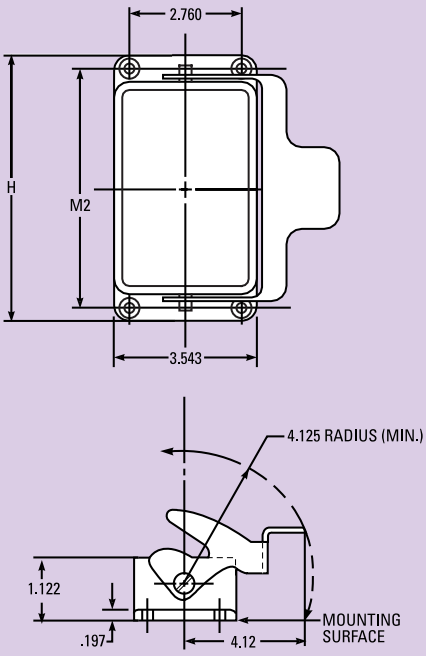

Thermocouple / Mold Power Connectors

ITEM NUMBER	NUMBER OF ZONES (MAX.)
MTC-5-G*	5
MTC-8-G	8
MTC-12-G	12
TPC-0001	12

* Use with 2, 3 and 5-zone, 30 AMP mainframes

Mold Connector Pocket Layouts

NOTE: Drawing depicts below-flush mounting. Disregard dimensions marked with * for surface mounting.

Where space or mold handling and storage requirements do not permit the use of Terminal Mounting Boxes, the connectors can be below-flush or surface mounted. See drawings below and page 30 for dimensions.

Below-Flush and Surface Mounting of Mold Power Input Connectors (15 AMP)

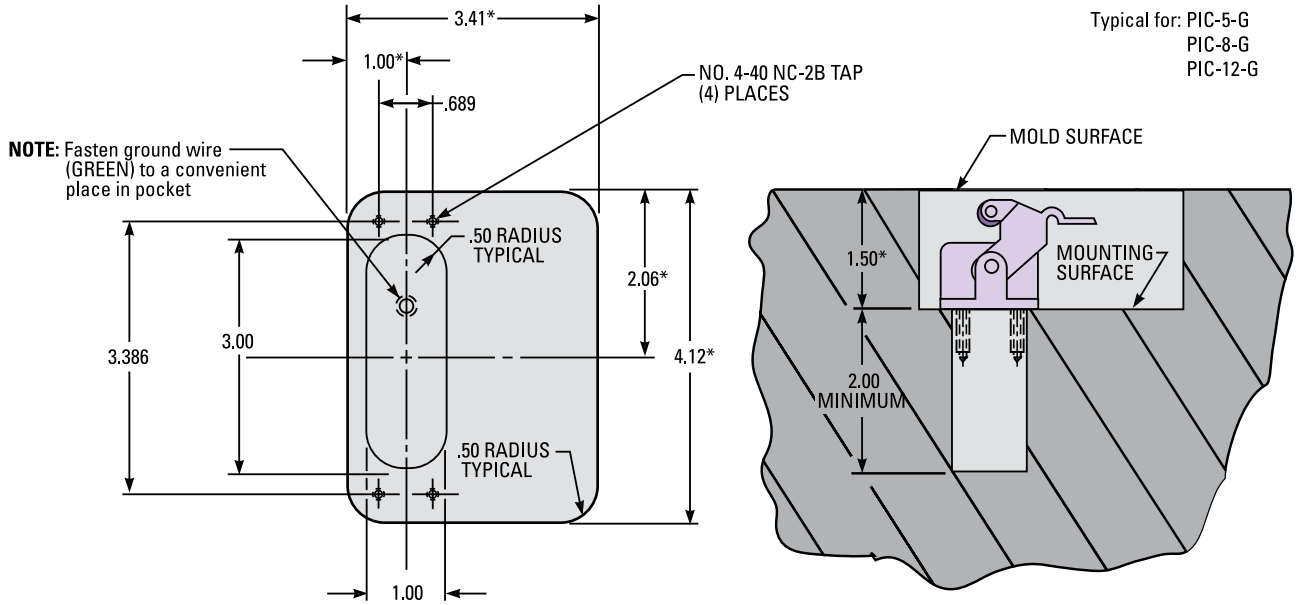

NOTE: Disregard dimensions marked with * for surface mounting.

Below-Flush and Surface Mounting of Thermocouple Connectors

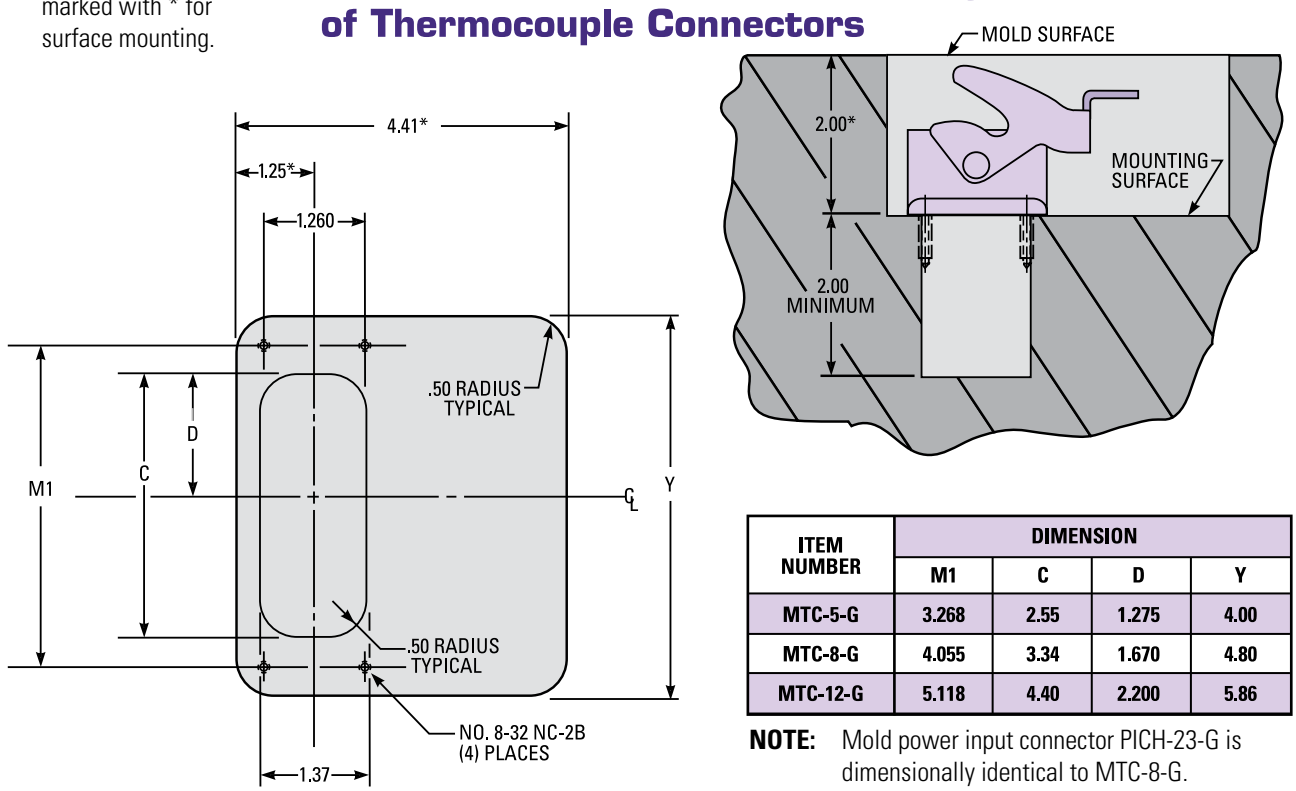

ITEM NUMBER	DIMENSION			
	M1	C	D	Y
MTC-5-G	3.268	2.55	1.275	4.00
MTC-8-G	4.055	3.34	1.670	4.80
MTC-12-G	5.118	4.40	2.200	5.86

NOTE: Mold power input connector PICH-23-G is dimensionally identical to MTC-8-G.

Mold Connector Pocket Layouts

Below-Flush and Surface Mounting of Mold Power Input Connectors (30 AMP)

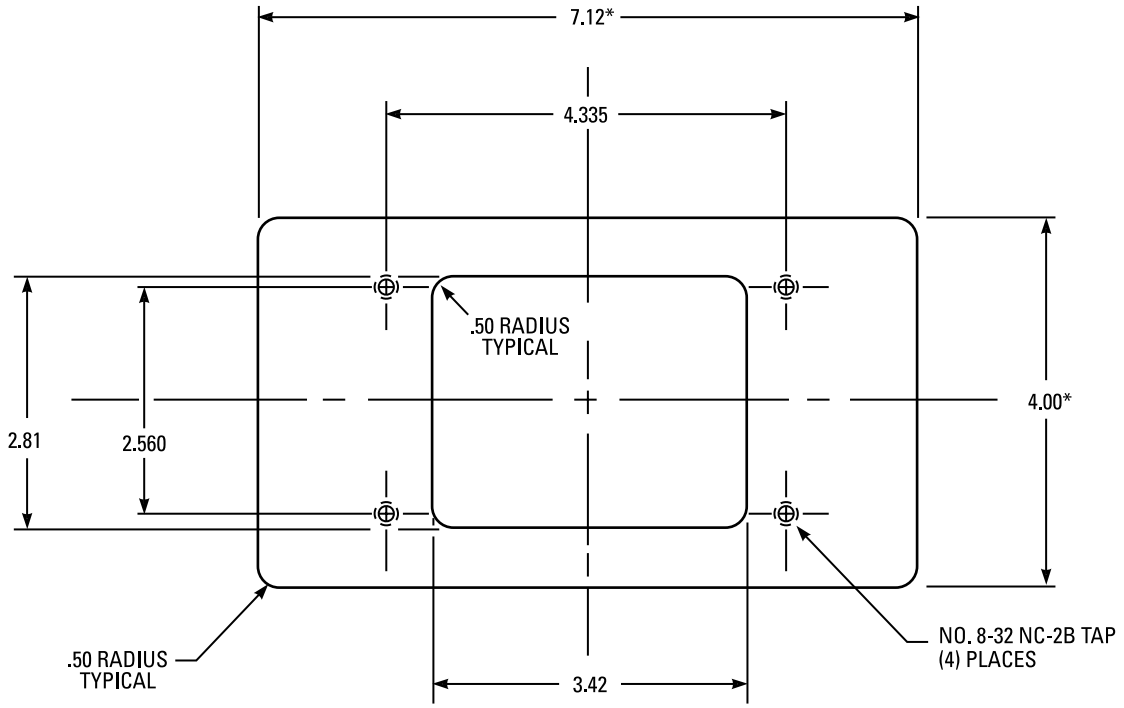

For PICH-5-G

NOTE: Drawing depicts below-surface mounting. Disregard dimensions marked with * for surface mounting.

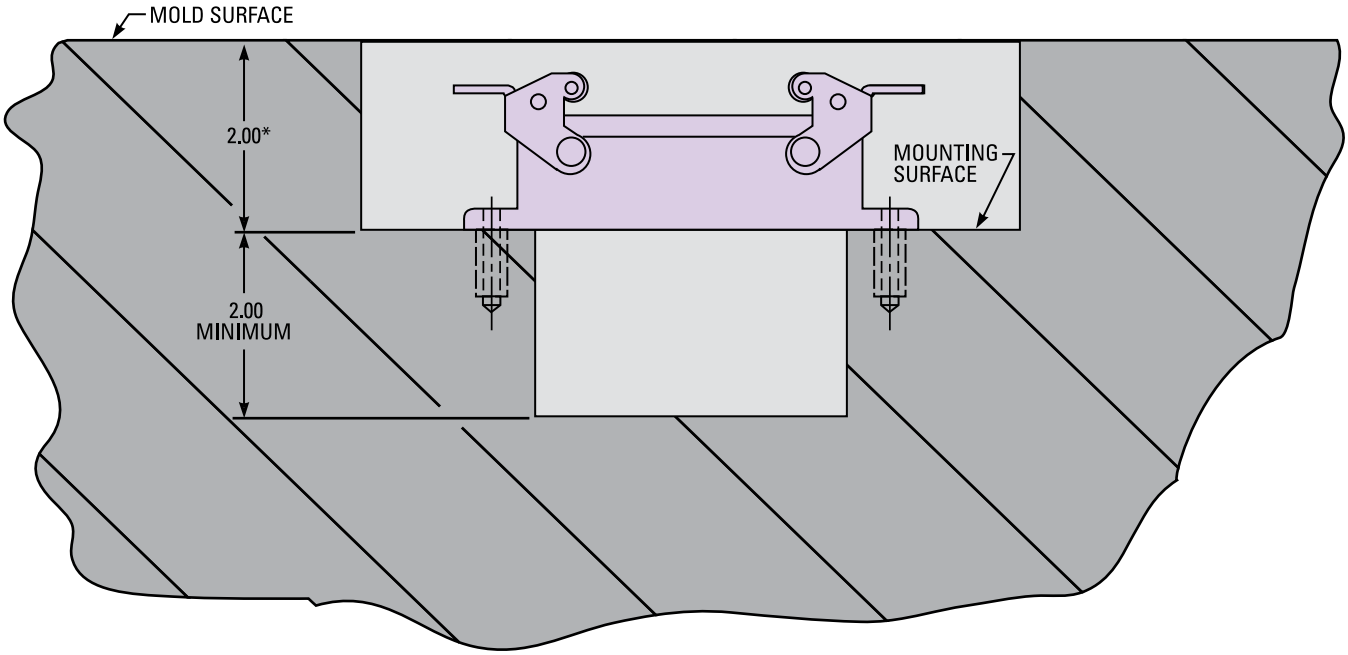

For PICH-23-G

(Use pocket dimensions shown on pages 28-29 as detailed for thermocouple connector MTC-8-G.)

Pre-wired Combination Terminal Mounting Boxes

Includes terminal strip for ease of wiring, all necessary connectors installed, and power connector pre-wired to a terminal strip. All units shown without covers.

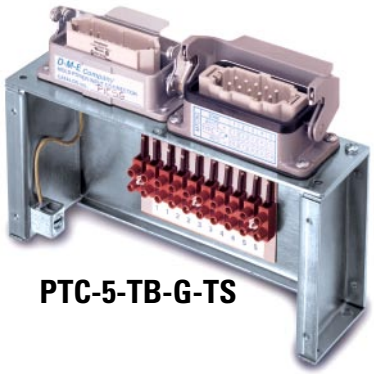

PTC-5-TB-G-TS

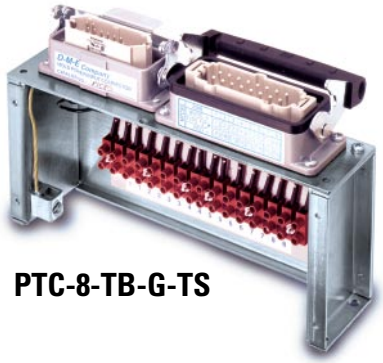

PTC-8-TB-G-TS

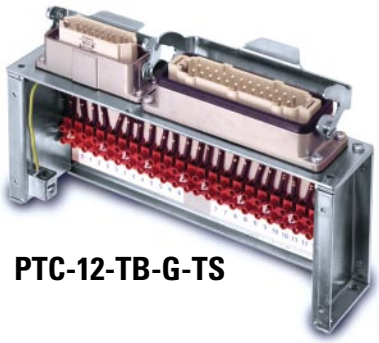

PTC-12-TB-G-TS

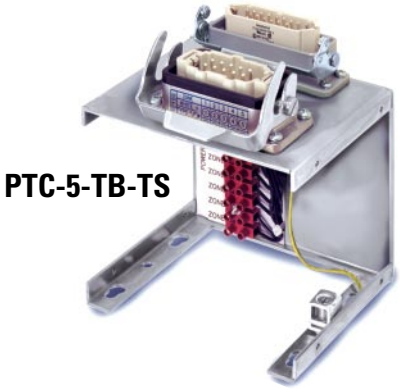

PTC-5-TB-TS

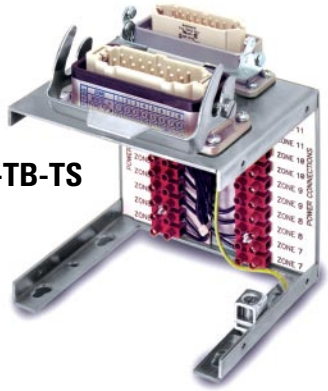

PTC-8-TB-TS

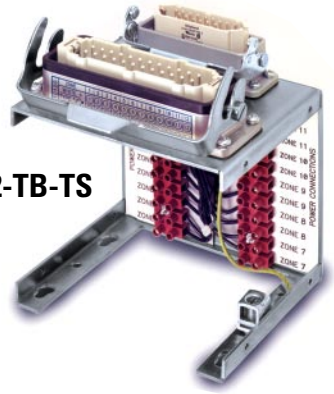

PTC-12-TB-TS

PTC-2-TB-G-TS

PTC-2-TB-GTS is not to be used with SSH-10-22, SSH-10-21, MFP-1-G, MFP-1-G-1, MFP-2-G, MFPR-2-G controls & mainframes

For use with PTC-0110 or PTC-0120 Cables only. See page 11.

Combination Terminal Mounting Boxes - with Terminal Strip

ITEM NUMBER	X	Y	H	M1	M2	ACCEPTS
PTC-2-TB-G-TS*	2.75	4.88	4.25	1.500	4.250	See page 16
PTC-5-TB-G-TS**	2.75	8.66	4.25	1.500	8.031	PIC-5-G, MTC-5-G**
PTC-8-TB-G-TS**	2.75	9.47	4.25	1.500	8.843	PIC-8-G, MTC-8-G**
PTC-12-TB-G-TS**	2.75	10.53	4.25	1.500	9.906	PIC-12-G, MTC-12-G**
PTC-5-TB-TS**	5.00	6.13	5.12	2.625	5.000	PIC-5-G, MTC-5-G**
PTC-8-TB-TS**	5.00	6.13	5.12	2.625	5.000	PIC-8-G, MTC-8-G**
PTC-12-TB-TS**	5.00	6.13	5.12	2.625	5.000	PIC-12-G, MTC-12-G**

**Comes with all necessary connectors installed and power connector pre-wired to a terminal strip.
*Power & thermocouple connectors are pre-wired.

Terminal Mounting Boxes

PTC-8-TB-G
(Connectors ordered separately)

PTC-5-TB-G

PTC-0012

PIC-512-TB-G

PTC-2-10

Terminal Mounting Boxes provide the easiest and most economical method of mounting power and thermocouple connectors on the mold. Constructed of plated heavy gauge steel, each box is precut and drilled for quick mounting of the connector to the box, and box to the mold. Connector mounting hardware is supplied. Connectors are ordered separately.

Terminal Mounting Boxes for Mold Power Input Connectors

ITEM NUMBER	X	Y	H	M1	M2	ACCEPTS
PIC-512-TB-G	2.75	4.875	4.25	1.500	4.250	PIC-5, 8 or 12-G
PICH-23-TB-G	2.75	5.614	4.25	1.500	4.990	PICH-23-G
PICH-5-TB-G	4.46	6.676	4.25	3.250	6.052	PICH-5-G

Terminal Mounting Boxes for Thermocouple Connectors

ITEM NUMBER	X	Y	H	M1	M2	ACCEPTS
MTC-5-TB-G	2.75	4.875	4.25	1.500	4.250	MTC-5-G
MTC-8-TB-G	2.75	5.614	4.25	1.500	4.990	MTC-8-G
MTC-12-TB-G	2.75	6.676	4.25	1.500	6.052	MTC-12-G

Combination Terminal Mounting Boxes

ITEM NUMBER	X	Y	H	M1	M2	ACCEPTS
PTC-2-10	2.75	4.88	4.25	1.500	4.250	(2) CKPTIC-1
PTC-5-TB-G	2.75	8.66	4.25	1.500	8.031	PIC-5-G, MTC-5-G
PTC-8-TB-G	2.75	9.47	4.25	1.500	8.843	PIC-8-G, MTC-8-G
PTC-12-TB-G	2.75	10.53	4.25	1.500	9.906	PIC-12-G,MTC-12-G
PTCH-1-TB-G**	4.46	4.88	4.25	3.250	4.250	AC1240MI, TCS-1
PTCH-23-TB-G	2.75	10.53	4.25	1.500	9.906	PICH-23-G, MTC-5-G
PTCH-5-TB-G	4.46	11.06	4.25	3.250	10.431	PICH-5-G, MTC-5-G
PTC-0012	4.46	7.66	4.25	3.250	7.160	TPC-0001

* Used with 2-zone, 15 AMP mainframe MFFPR-2G ** Used with 1-zone, 30 AMP mainframe MFHP-1G

Terminal Mounting Boxes

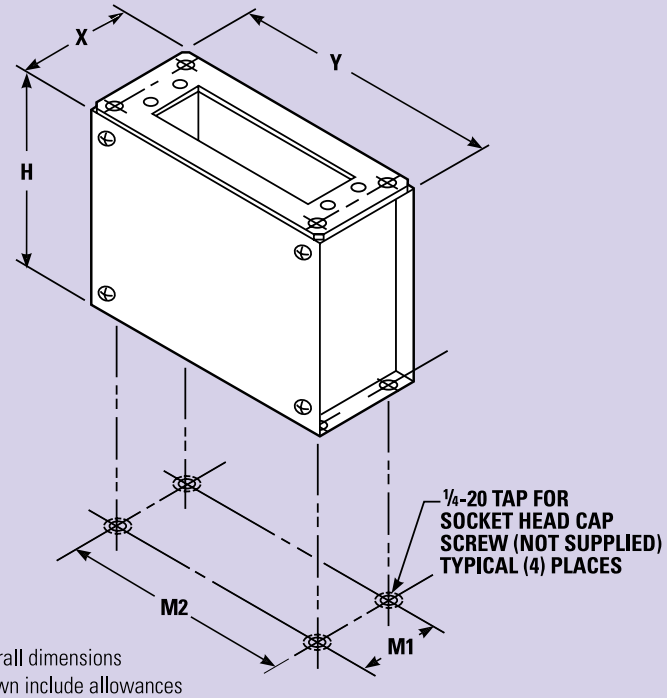

NOTE: Overall dimensions shown include allowances for hardware (assembly screws) but not connectors.

Microprocessor-Based Temperature Control Modules with Digital Display and Setpoint Pushwheel

COMPATIBLE WITH TAS-05-12 ALARM AND SYSTEM CONTROL FUNCTIONS. SEE PAGES 37-38.

NOTE: SSM-30-12 is twice as wide as above and has circuit breaker instead of power on/off switch.

SSM-15-12/11 (15 AMP) & SSM-30-12 (30 AMP)

The SSM-15-12 is the second generation of the popular SSM-15G. This version maintains simplicity of operation with simultaneous display of setpoint and temperature. Other new, improved, and unique features include:

Key Features

- **Large Digital Display**
  - For easier readability of temperature, % power and faults
- **Setpoint Pushwheel**
  - For setting desired setpoint temperature
  - Allows adjustment of setpoint before turning power on
- **Auto % Power Display**
  - Shows % power output while in AUTO mode
  - Indicates average % power requirement on thermocouple failure
  - Serves as a diagnostic tool for solving hot runner system problems

Operational Refinements

- **Improved SmartStart®**
  - A more gradual temperature rise leads to a more effective heater dry-out period, thereby extending heater life
  - SmartStart® now available in MANUAL mode (optional)
- **SelectiveCycle®**
  - A very high speed power output approach
  - Enables accurate temperature control and longer heater life
- **Bumpless Transfer**
  - When a thermocouple failure occurs, operation is automatically continued with a learned % power
  - Unique software accurately assigns percent power setting
- **Third Fuse**
  - Allows for alarm output when the load fuses are blown
  - Protects module from application of excessive voltage
- **Anti-Arcing Feature**
  - Protects circuit board from damage when module is either inserted or removed under power

Switchable Options

- **Boost, Idle and Power Off Features**
  - Provides system-wide adjustment of temperatures
  - Enables alarm audio/visual output and remote alarms
  - Requires TAS-05-12 module and communications mainframe (See pages 37-38 for more information on these capabilities)
- **Unique AutoBoost Option**
  - Instantaneously opens frozen gates on startup
  - TAS module or mainframe communications are not required
- **Lights Out Feature**
  - After stabilizing at setpoint, display turns off; when a fault occurs, display is turned on and flashes
  - For easier detection of faults
- **Shorted Thermocouple Sensitivity Adjustment**
  - Operation can be tailored to fast or slow reaction times
  - Sensitivity can be adjusted with internal switches
  - Very useful for manifold zones with long startup times
- **Switchable °C/°F Operation**
  - Scale indicated at startup
- **K Type Thermocouple Support**
- **Cut Feature**
  - Gain cut feature for small nozzles and heaters with ungrounded internal thermocouples

Microprocessor-Based Temperature Control Modules with Digital Display and Setpoint Pushwheel

SSM-15-12/11 (15 AMP) & SSM-30-12 (30 AMP)

Warranty:
Three years
(excluding triac and fuses)

Fuse Requirements
(15 AMP only)
(2) ABC-15 fuses (Bussman only)
(2) spare fuses included
with module

MODULE ITEM NUMBER	VOLTAGE (VAC)	AMPS	WATTS
SSM-15-12	240	15	3600
SSM-15-11	120	15	1800
SSM-30-12	240	30	7200

NOTE: Standard (240 VAC) modules are compatible with mainframes wired for either 240 VAC three phase (standard) or 240 VAC single phase.

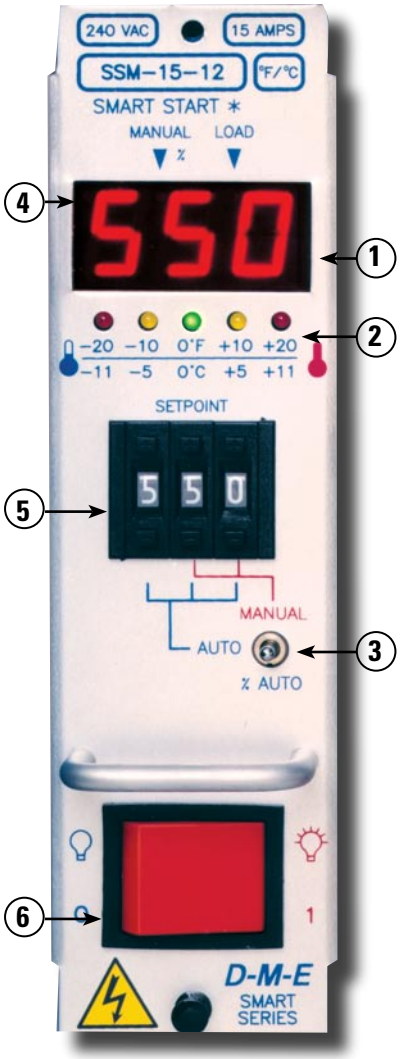

Front Panel Controls and Indicators

1. Process Temperature Display
Indicates process temperature, thermocouple faults and other operational modes. Displays % power when switch **(3)** is in "% Auto" position.

2. Temperature Deviation Lights
Indicates deviation from setpoint. Outer lights blink when temperature is more than ±40°F (22°C) from setpoint.

3. Auto/Manual/Auto % Power Switch
Selects AUTO or MANUAL control mode. Shows % power when pressed into "% AUTO" position.

4. LED Mode Indicators
Left LED illuminates during MANUAL mode.
Right LED illuminates when power is supplied to heater.
Right LED blinks on and off during SmartStart®.

5. Setpoint Pushwheel
Three-digit switch programs setpoint in AUTO mode. Right two digits program % power in MANUAL mode.

6. Power On/Off Switch
Controls AC power to module.

Front Panel Digital LED Indicators

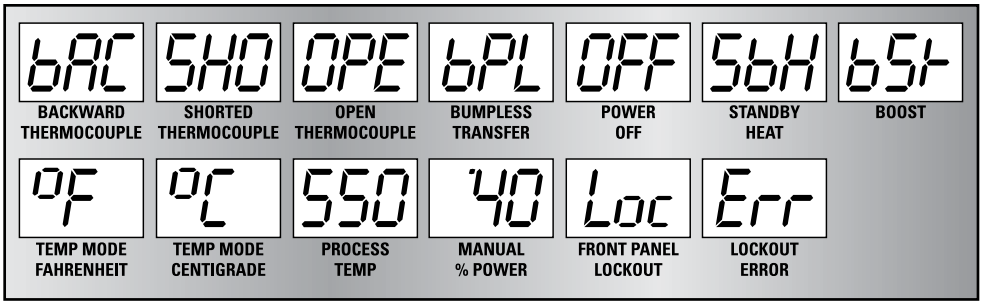

Microprocessor-Based Temperature Control Modules with Dual Digital Display

COMPATIBLE WITH TAS MODULE ALARM AND STANDBY HEAT FUNCTIONS. SEE PAGES 37-38.

DSS-15-12/11 (15 AMP) & DSS-30-12 (30 AMP)

The DSS-15 Smart Series Module has dual digital displays providing readouts of both process and setpoint temperatures at a glance. Closed-loop, fuzzy logic PID control, and auto-tuning of PID parameters provide precise control even under the most adverse processing conditions.

In the event of a thermocouple failure, the DSS can automatically invoke bumpless transfer to a percent power mode based on the last valid percentage learned before the thermocouple failure. If desired, manual bumpless transfer may be selected, in which case a thermocouple fault will turn off power to the heater until the manual percent power mode is activated by the operator.

A unique feature of the DSS is a 100% power option. For a switch-selectable, interval of 15 or 30 seconds, full power can be immediately delivered to the heater to rapidly break through frozen gates to achieve quicker start-ups. The 100% power mode can be disengaged at any time by simply pressing any front panel button.

Indicator lights provide quick reference for module control modes, temperature deviation and blown fuses. The process temperature display also provides quick diagnostics of thermocouple faults, using the following abbreviated codes:

Shi = Shorted Thermocouple
oPi = Open Thermocouple
bci = Reversed Thermocouple

The DSS module also includes a Smart Start® mode to safely bake out damaging internal heater moisture at system start-up and to prolong heater life. Fast or slow load modes may also be selected to protect smaller heaters or compensate for "slow" loads such as externally heated manifolds. An accurate, durable and full-featured module, the DSS is fully compatible with all Smart Series or G-Series® 15 AMP mainframes.

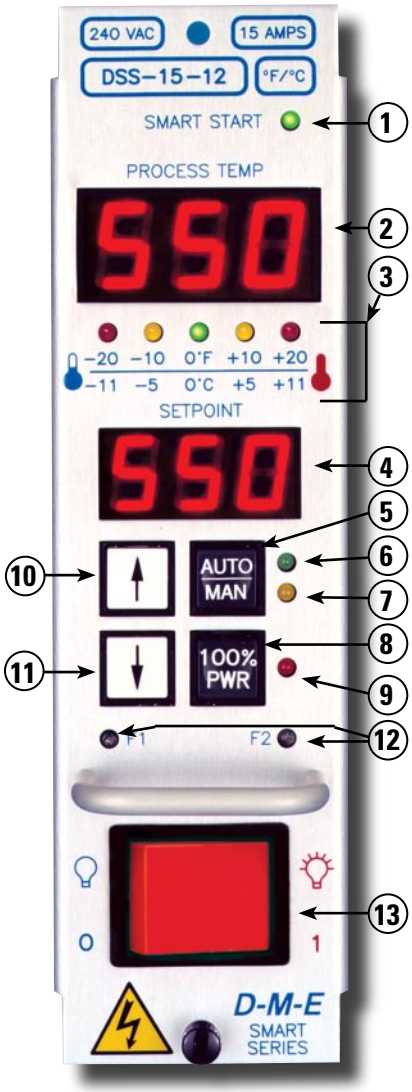

NOTE: DSS-30-12 is twice as wide as above; has circuit breaker instead of F1/F2 lights and power on/off switch.

Front Panel Controls and Indicators

1. **Smart Start Light**
   Indicates Smart Start is on.
2. **Process Temperature Display**
   Indicates process temperature and thermocouple faults as described above.
3. **Temperature Deviation Lights**
   Indicates deviation from setpoint. Outer lights blink at more than ±30°F from setpoint.
4. **Setpoint Display**
   Indicates setpoint temperature or percent power, depending on controller mode.
5. **Auto/Manual Switch**
   Selects auto or manual control mode.
6. **Auto Light**
   Indicates auto mode.
7. **Manual Light**
   Indicates manual mode.
8. **100% Power Switch**
   Indicates 100% power output for selectable interval of 15 or 30 seconds.
9. **100% Power Light**
   Indicates 100% power mode.
10. **Up Arrow**
    Increases desired setpoint value.
11. **Down Arrow**
    Decreases desired setpoint value.
12. **F1/F2 Lights**
    Illuminate when fuse is blown.
13. **Power On/Off Switch**

Front Panel Digital LED Indicators

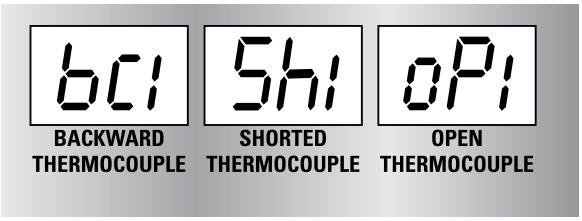

Microprocessor-Based Temperature Control Modules with Dual Digital Display

DSS-15-12/11 (15 AMP) & DSS-30-12 (30 AMP)

Performance Specifications

Auto and Manual Control Modes:	Time proportioning/Selective Cycle®
Temperature Range:	Ambient to 999°F (537°C)
Control Accuracy:	±1°F (0.5°C) dependent on the total thermal system
Temperature Stability:	± 0.5% of full scale over the ambient range of 32 to 120°F (0 to 50°C)
Calibration Accuracy:	Better than 0.2% of full scale
Power Response Time:	0.538 seconds.
Manual Control:	Adjustable from 0-100%, maintains output power to within 1% of set point.
Smart Start®:	Linear voltage ramping.
Maximum Smart Start Duration:	5 minutes
Smart Start Override Temperature:	256°F (124°C)
100% Power:	Applies 100% power to the output. Software selectable inhibit or S = 15, L = 30 seconds.
Operational Mode Priority:	• Smart Start® precedes auto mode. • Thermocouple (T/C) break, reversed or shortened T/C overrides Smart Start and auto modes. • Manual control overrides auto mode, T/C breaks, reversed or shortened thermocouples. • Output is inhibited during all fault conditions

Input Specifications

Thermocouple Sensor:	Type J, grounded or ungrounded.
External T/C Residence:	Less than 0.1°F/Ω.
T/C Isolation:	Isolated by control circuit power supply
Cold Junction Compensation:	Automatic, better than 0.03°F/F (0.015°C/°C).
T/C Break, Reversed & Shorted Protection:	Automatically inhibits power to heater unless bumpless transfer is invoked.
Input Impedance:	5.6 Megohms
Input Amplifier Stability:	Greater than 0.02°F/°F (0.01°C/°C).
Common Mode Rejection Ratio:	Greater than 120dB.
Power Supply Rejection:	Greater than 110dB.

Output Specifications

Voltage Power Capability:	15 AMP: 240 nominal, single phase, 120 VAC available, 15 amperes, 3600 watts @ 240 VAC (1800 watts @ 120 VAC). 30 AMP: 30 amperes, 7200 watts @ 240 VAC
Output Drive:	Internal solid state triac, triggered by zero AC crossing pulses.
Overload Protection:	15 AMP: Fuses are provided on both sides of AC line. 30 AMP: Fast acting circuit breaker.
Transient Protection:	dv/dt and transient pulse suppression included.
Power Line Isolation:	Optically and transformer isolated from AC lines. Isolation voltage is greater than 2500 volts.

Controls and Indicators

Auto/Manual Selection:	Push-button switch with LED indicators adjacent to switch.
Setpoint Adjustment:	Push-button up & down arrow keys.
100% Power Selection:	Push-button switch with LED indicator adjacent.
Power On/Off:	16 AMP rocker switch (15 AMP) or 30 AMP circuit breaker (30 amp). Both are UL, CSA, VDE approved.
Setpoint Display:	Three 0.4", seven segment digit display.
Process Display:	Three 0.56", seven segment digit display. Also displays alarm codes and flashing "100" for 100° power operation.
100% Power Indication:	Red LED adjacent to 100% power key flashes. Process display flashes "100."
Auto Indication:	Illuminates green LED adjacent to Auto/Man key.
Manual Indication:	Illuminates yellow LED adjacent to Auto/Man key.
Smart Start Indication:	Illuminates green LED above the process display.
Shorted T/C Indication:	Flashes "Shi" in process display.
Opened T/C Indication:	Flashes "oPi" in process display.
Reversed T/C Indication:	Flashes "bci" in process display.
Temperature Deviation Indicators:	Five separate LEDs: ±20°F/11°C = Red ±10°F/5°C = Yellow 0° = Green.
Blown Fuse Indicators:	2 neon indicators (15 AMP only)

Electrical Power Specifications

Input Voltage:	240/120 VAC + 10% -15%
Frequency:	50/60 Hz
DC Power Supplies:	Internally generated, regulated and compensated
Module Power Usage:	Less than 6 watts, excluding load.
Dimensions:	15 AMP: 2"W x 7"H x 7 1/2 "D (5.08 x 17.78 x 19.05 cm) 30 AMP: 4"W x 7"H x 7 1/2 "D (10.06 x 17.78 x 19.05 cm)

NOTE: Standard (240 VAC) modules are compatible with mainframes wired for either 240 VAC three phase (standard) or 240 VAC single phase.

FOR °C OPERATION: Switch to °C on front panel.

FUSE REQUIREMENTS (15 AMP ONLY): (2) ABC-15 Fuses (Bussman only)

NOTE: (2) spare fuses included with module.

WARRANTY: Three years (excluding triac and fuses)

Smart Series Microprocessor-Based Temperature Control Modules

(240 VAC, standard)

ITEM NUMBER	AMPS	WATTS
DSS-15-12	15	3600
DSS-30-12	30	7200

(120 VAC, optional)

ITEM NUMBER	AMPS	WATTS
DSS-15-11	15	1800

Temperature Alarm/System Control Modules

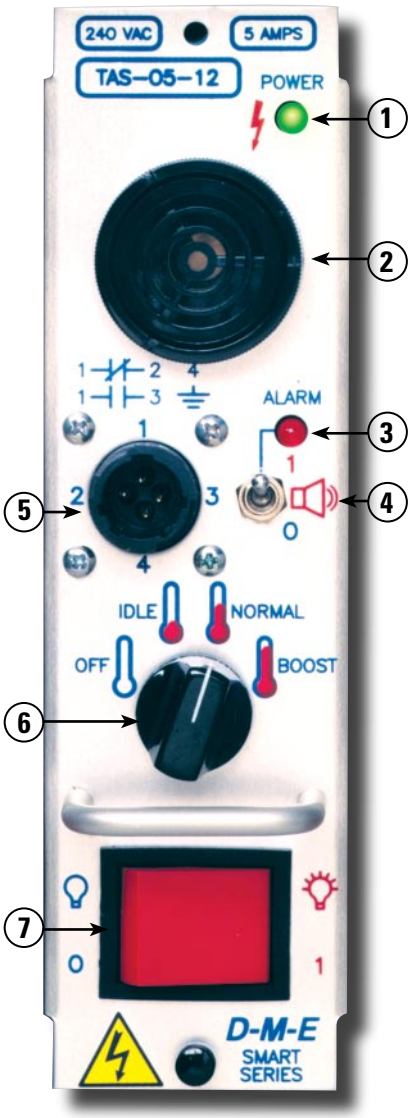

TAS-05-12/11 Temperature Alarm Function

- Provides alarm for over or under temperature, or diagnostic error
- Provides visual and audible indications of an alarm
- The audible alarm **(2)** can be turned on or off with switch **(4)**
- Relay contacts **(5)** are provided to allow hook-up of remote equipment such as a light, a conveyor or a machine function
- Relay contacts are unaffected by the position switch **(4)**
- An infinite number of zones of control can be monitored as long as they are contained within the same communications-style mainframe as the TAS module

System Control Functions

Up to 63 zones can be controlled remotely at one time. These zones must be contained within the same communications-style mainframe as the TAS module.

NORMAL / IDLE

- Rotary switch **(6)** provides remote control of DSS-15-02/01, DSS-15-12/11, CSS-15-02/01, SSM-15-02/01, and SSM-15-12/11
- Control modules can all be commanded to respond from NORMAL to IDLE (Standby Heat)
- In IDLE, the modules will adjust to a setting of 93°C (200°F)
  Exceptions: SSM-15-02/01 and SSM-15-12/11 adjust to a setting of 100°C (212°F)
- Moving the rotary switch back to NORMAL restores all modules to their established setpoints
- The user can select IDLE for temporary lowering of all zones to prevent material degradation
- This feature can be used to keep heaters warm enough to prevent absorption of moisture

BOOST / OFF

- The SSM-15-02/01 and SSM-15-12/11 can be placed into BOOST and OFF
- BOOST will raise the setpoint of the module by 10, 20, or 30%
- OFF shuts off power to the heater but allows the user to monitor cool down of the hot runner system
- Each SSM-15-02/01 and SSM-15-12/11 can be individually programmed to respond to OFF, IDLE and BOOST commands
- The user can quickly drive all nozzle zones into BOOST to open frozen gates

Front Panel Controls and Indicators

1. **Power On Indicator:** LED illuminates when power is applied to the module.
2. **Audible Alarm:** Emits a loud audible alarm when the alarm switch (**4**) is placed in the "1" position (ON) and an alarm condition is sent by a compatible control module.
3. **Alarm Indicator:** LED illuminates when an alarm condition is sent by a compatible module.
4. **Audio Alarm On/Off Switch:** Turns the audio alarm **(2)** on or off.
5. **Alarm Relay Connector** Provides relay contacts for use with remote equipment. Mating connector is supplied.
6. **System Control Switch:** Activates the OFF, IDLE and BOOST mode in all compatible modules.
7. **Power On/Off Switch:** Controls AC power to the module.

Temperature Alarm/System Control Modules

ITEM NUMBER	VOLTS
TAS-05-12	240 VAC
TAS-05-11	120 VAC

NOTE: Standard (240 VAC) modules are compatible with mainframes wired for either 240 VAC three-phase (standard) or 240 VAC single-phase. Use TAS-05-11 for 120 VAC operation.

FUSE REQUIREMENTS: (2) ABC-1 fuses. NOTE: (2) spare fuses included with module.

WARRANTY: Three years (excluding fuses).

TAS Module Compatibility

MODULE	FUNCTIONS			
	ALARM	IDLE	BOOST	OFF
SSM-1502/01/12/11	✓	✓	✓	✓
SSM-3002/12	✓	✓	✓	✓
DSS-1502/01/12/11	✓	✓		
DSS-3002/12	✓	✓		

Note: TAS module is not compatible with older CSS-15G/30G or DSS-15G/30G modules

MODULE	FUNCTIONS			
	ALARM	IDLE	BOOST	OFF
CSS-1502/01	✓	✓		
CSS-3002	✓	✓		
SSM-15G	✓			
SSM-15G1	✓			
SSM-30G	✓			

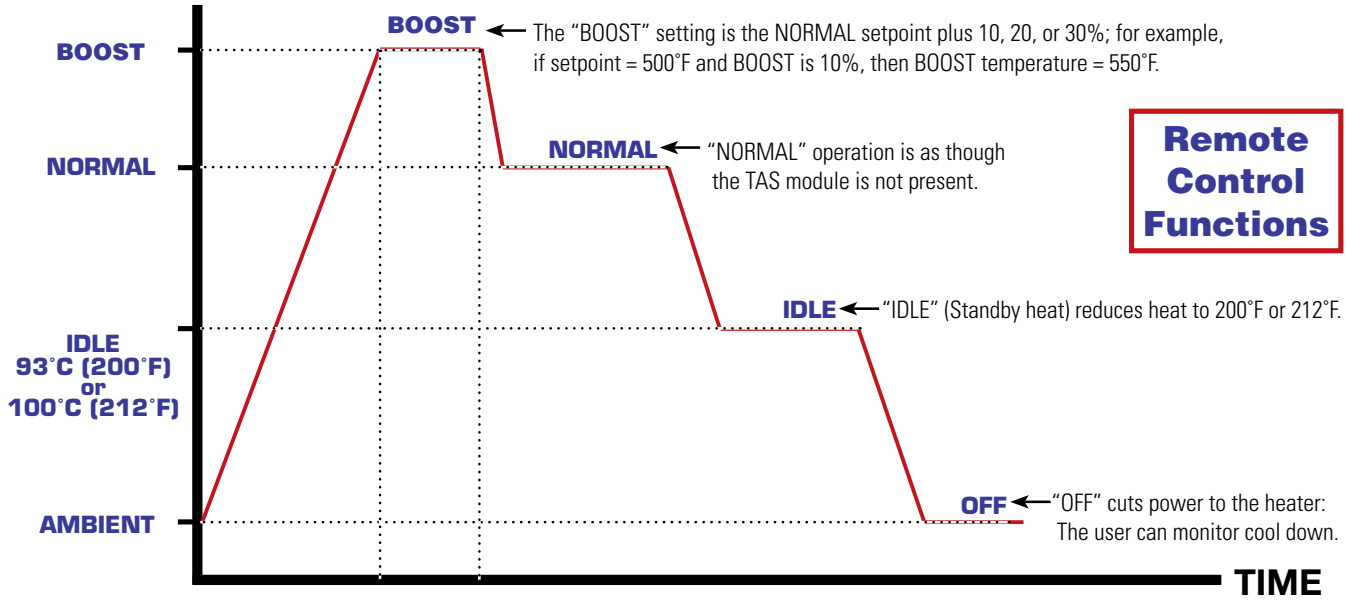

Remote Control Functions

Upgrade Kits For Converting to Communications Mainframes

ITEM NUMBER	MAIN FRAME
CIK-4	4-ZONE
CIK-5	5-ZONE
CIK-7	7-ZONE
CIK-8	8-ZONE
CIK-11	11-ZONE
CIK-12	12-ZONE
CIK-16	16-ZONE
CIK-20	20-ZONE
CIK-24	24-ZONE

ITEM NUMBER	MAIN FRAME
CIK-28	28-ZONE
CIK-32	32-ZONE
CIK-36	36-ZONE
CIK-40	40-ZONE
CIK-44	44-ZONE
CIK-48	48-ZONE
CIK-2HP	2-ZONE HIGH POWER
CIK-3HP	3-ZONE HIGH POWER
CIK-5HP	5-ZONE HIGH POWER

Replacement Parts and Service Items for D-M-E Smart Series® Temperature Control Systems

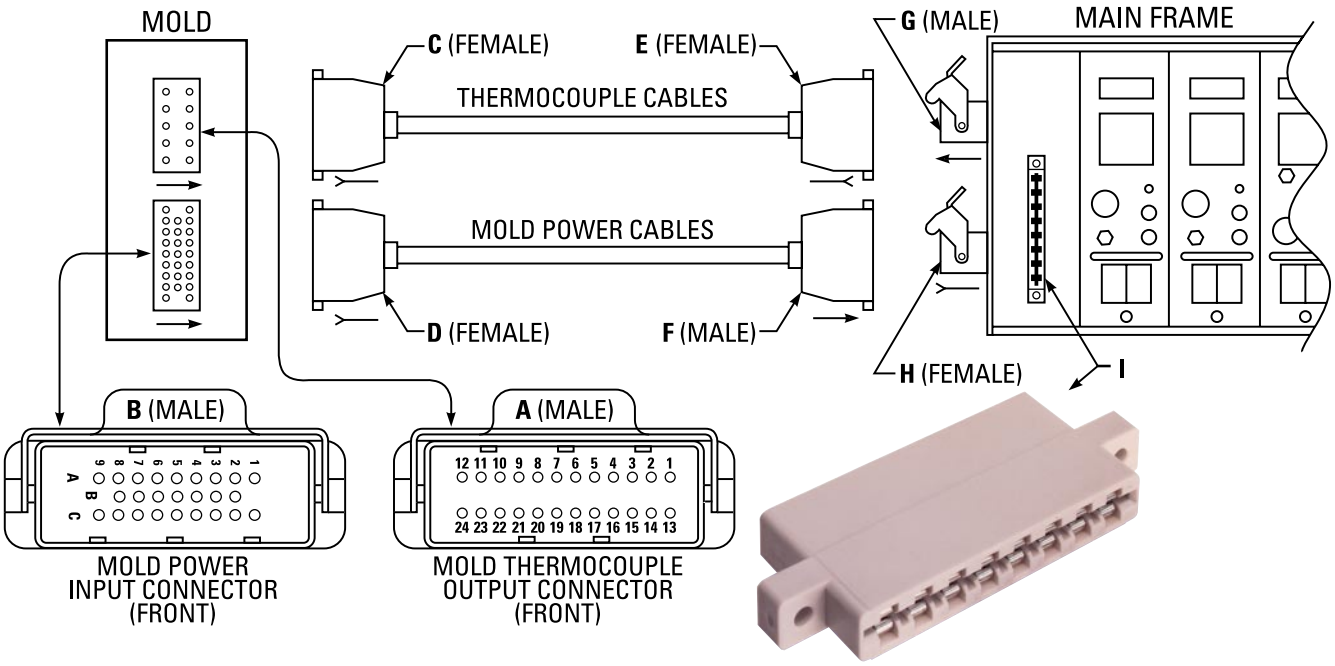

NOTE: For upper inside communications connectors, see page 38.

Connectors / Connector Kits (5 - 48 Zone, 15 Amp; 2 - 5 Zone, 30 Amp)

REFERENCE LETTER	DESCRIPTION	ITEM NUMBER
A	Mold Thermocouple Output Connectors	See pg. 28
B	Mold Power Input Connectors	See pg. 27
C	Mold End Kit for 5-Zone Thermocouple Cable (10, 15 or 30 AMP)	CKTF-15-G
	Mold End Kit for 8-Zone Thermocouple Cable (10 or 15 AMP)	CKTF-18-G
	Mold End Kit for 12-Zone Thermocouple Cable (10 or 15 AMP)	CKTF-112-G
D	Mold End Kit for all 10 or 15 AMP Power Cables	CKPF-112-BG
	Mold End Kit for 2 or 3-Zone 30 AMP Power Cables	CKPF-13-CG
	Mold End Kit for 5 Zone 30 AMP Power Cables	CKPF-15-CG
E	Frame End Kit for all Thermocouple Cables (10, 15 or 30 AMP)	CKTF-112-AG
F	Frame End Kit for all 10 or 15 AMP Power Cables	CKPM-112-BG
	Frame End Kit for 2 or 3-Zone, 30 AMP Power Cables	CKPM-13-CG
	Frame End Kit for 5-Zone, 30 AMP Power Cables	CKPM-15-CG
G	Thermocouple Input Kit for all Mainframes (10, 15 or 30 AMP)	CKTM-212-AG
H	Power Output Kit for all 10 or 15 AMP Mainframes	CKPF-212-BG
	Power Output Kit for 2-, or 3-Zone, 30 AMP Mainframes	CKPF-23-CG
	Power Output Kit for 5-Zone, 30 AMP Mainframes	CKPF-25-CG
I	Edge Card Connector Kit for all Mainframe PC Boards (10, 15 or 30 AMP)	CKF-312-G

Replacement Parts and Service Items for D-M-E Smart Series® Temperature Control Systems

Mainframe, Cable Components, and Service Tools*

CBD10M	10 AMP 2 POLE, CIRCUIT BREAKER USED IN MFP1G AND MFP1G1	
CBD20M	20 AMP 2 POLE, CIRCUIT BREAKER USED IN MFR2G	
CBD30M	30 AMP 2 POLE, CIRCUIT BREAKER USED IN MFFPR2G AND MFHP1G	
CBD50	50 AMP 3 POLE, CIRCUIT BREAKER USED IN 5 THROUGH 12 ZONE MAINFRAMES	
CBD70	70 AMP 3 POLE, CIRCUIT BREAKER USED IN 16 THROUGH 48 ZONE & HIGH POWER MAINFRAMES	
PIN-0114	14 GAUGE MALE PIN FOR "B"& "F" POWER CONNECTORS (PACKAGE OF 30)	SEE PAGE 39
PIN-0214	14 GAUGE FEMALE SOCKET FOR "D"& "H" POWER CONNECTORS (PACKAGE OF 30)	SEE PAGE 39
PIN-0120	20 GAUGE MALE PIN FOR "G" THERMOCOUPLE CONNECTOR (PACKAGE OF 30)	SEE PAGE 39
PIN-0220	20 GAUGE FEMALE PIN FOR "E" THERMOCOUPLE CONNECTOR (PACKAGE OF 30)	SEE PAGE 39
WHT-1919	CRIMP TOOL FOR ALL PIN-XXXX LISTED ABOVE	
RPM-0048	EXTRACTION TOOL FOR ALL PIN-TYPE CONNECTOR PINS	
RPM-0038	NEON INDICATORS USED ON 240 VAC MAINFRAME CIRCUIT BREAKER PANELS	
RPM-0044	CARD GUIDES FOR ALL MAINFRAMES	
RPM-0046	PINS FOR WHITE EDGE CARD CONNECTORS "I" (PACKAGE OF 20)	
RPM-0059	PANEL MOUNT BASE & LATCH FOR 5 ZONE THERMOCOUPLE MOLD CONNECTION "A"	SEE PAGE 39
RPM-0060	PANEL MOUNT BASE & LATCH FOR 8 ZONE THERMOCOUPLE MOLD CONNECTION "A"	SEE PAGE 39
RPM-0061	PANEL MOUNT BASE & LATCH FOR 12 ZONE THERMOCOUPLE MOLD CONNECTION "A"	SEE PAGE 39
RPM-0062	MALE INSERT FOR 5 ZONE THERMOCOUPLE MOLD CONNECTION "A"	SEE PAGE 39
RPM-0063	MALE INSERT FOR 8 ZONE THERMOCOUPLE MOLD CONNECTION "A"	SEE PAGE 39
RPM-0064	MALE INSERT FOR 12 ZONE THERMOCOUPLE MOLD CONNECTION "A"	SEE PAGE 39
RPM-0065	FEMALE INSERT FOR 5 ZONE THERMOCOUPLE CABLE CONNECTOR "C"	SEE PAGE 39
RPM-0066	FEMALE INSERT FOR 8 ZONE THERMOCOUPLE CABLE CONNECTOR "C"	SEE PAGE 39
RPM-0067	FEMALE INSERT FOR 12 ZONE THERMOCOUPLE CABLE CONNECTOR "C"	SEE PAGE 39
RPM-0068	HOOD FOR 5 ZONE THERMOCOUPLE CABLE CONNECTOR "C"	SEE PAGE 39
RPM-0069	HOOD FOR 8 ZONE THERMOCOUPLE CABLE CONNECTOR "C"	SEE PAGE 39
RPM-0070	HOOD FOR 12 ZONE THERMOCOUPLE CABLE CONNECTOR "C"	SEE PAGE 39
RPM-0071	HOOD FOR 5, 8 & 12 POWER & THERMOCOUPLE CABLE CONNECTIONS "D","E" & "F"	SEE PAGE 39
RPM-0072	MALE INSERT FOR "B", "F" & "G" (15 AMP CONNECTOR RATING IS EXCLUSIVE TO D-M-E)	SEE PAGE 39
RPM-0073	FEMALE INSERT FOR "D", "E" & "H" (15 AMP CONNECTOR RATING IS EXCLUSIVE TO D-M-E)	SEE PAGE 39

***(Reference page 28-39 for Letter Designations)**

All Smart Series Modules

ABC-1	1 AMP 250 VAC FUSE
ABC-3	3 AMP 250 VAC FUSE - NOTE: THESE LOWER POWER FUSES ARE RECOMMENDED FOR NOZZLES
ABC-5	5 AMP 250 VAC FUSE - NOTE: THESE LOWER POWER FUSES ARE RECOMMENDED FOR NOZZLES
ABC-10	10 AMP 250 VAC FUSE - NOTE: REQUIRED FOR 15 AMP MODULES USED IN 10 AMP FRAMES
ABC-15	15 AMP 250 VAC FUSE
NYL-0001	"NYLATCH" MODULE RETENTION PLUNGER AND GROMMET (10/PKG) - NOTE: AT THE BOTTOM OF EACH MODULE
RPM-0008	POWER ROCKER SWITCH FOR ALL MODULES EXCEPT DSS AND CSS-1524
RPM-0009	TRANSFORMER TYPE DST-4-16 FOR ALL MODULES EXCEPT DSS & TAS
RPM-0027	ALUMINUM HANDLE FOR 15 AMP MODULES
RPM-0039	30 AMP 2 POLE, CIRCUIT BREAKER FOR MODULES
RPM-0023	TRIAC - TYPE Q6040P 40 AMP 600 VOLT FOR USE ON ALL MODULES
RPM-0054	TRIAC - TYPE BTA40-800B 40 AMP 800 VOLT FOR USE ON ALL MODULES EXCEPT CSS
RPM-0050	2200 OHM FLAME PROOF FUSIBLE LINK RESISTOR USED IN THERMOCOUPLE CIRCUIT (10/PKG) USED ON ALL MODULES
RPM-0088	A/D CONVERTER FOR SSM-15G, SSM15G1, SSM-30G, SSH-1001, SSH-1002 AND ALL CSS MODULES

Replacement Parts and Service Items for D-M-E Smart Series® Temperature Control Systems

CSS-15G, CSS-30G, CSS-1502, CSS-3002

CSS-0001	MICROPROCESSOR FOR CSS-15G
CSS-0002	MICROPROCESSOR FOR CSS-1502
RPM-0011	TRIAC DRIVER U14
RPM-0012	OPTOCOUPLER U9 & U11
RPM-0013	OPERATIONAL AMPLIFIER U8 & U13
RPM-0014	OPERATIONAL AMPLIFIER U3

DSS-15G, DSS-30G, DSS-1502, DSS-3002

DSS-0001	MICROPROCESSOR FOR DSS-15G, DSS-15G1 & DSS-30G
DSS-0002	MICROPROCESSOR FOR DSS-1501, DSS-1502 & DSS-3002
RPM-0020	TRANSFORMER
RPM-0022	TRIAC DRIVER Q1
RPM-0024	POWER ROCKER SWITCH
RPM-0086	315 MA TIME LAG FUSE F3 (USED IN DSS-1501, 1502, & 3002 MODULES ONLY); CHECK YOUR MODULE!
RPM-0089	200 MA TIME LAG FUSE F3 (USED IN DSS-1501, 1502, & 3002 MODULES ONLY); CHECK YOUR MODULE!

SSM-15G, SSM-30G, SSH-1002, ESH-1012

RPM-0010	TRIAC DRIVER U5
RPM-0012	OPTOCOUPLER U6 & U7
RPM-0013	OPERATIONAL AMPLIFIER U2
RPM-0014	OPERATIONAL AMPLIFIER U8
RPM-0015	SETPOINT POTENTIOMETER (FRONT PANEL)

SSM-1501, SSM-1502, SSM-3002, SSH-1011, SSH-1012, ESH-1012

SSM-0002	MICROPROCESSOR
RPM-0010	TRIAC DRIVER U5
RPM-0014	OPERATIONAL AMPLIFIER U3 & U8
RPM-0053	PUSHWHEEL ASSEMBLY, WITH CABLE
RPM-0055	AUTO/MANUAL/AUTO% SWITCH FOR FRONT PANEL (SSM ONLY) (FRONT PANEL)
RPM-0056	AUTO/MANUAL/AUTO% SWITCH FOR FRONT PANEL (SSH & ESH) (FRONT PANEL)
RPM-0087	250 MA TIME LAG FUSE F3; CHECK YOUR MODULE!
RPM-0090	160 MA TIME LAG FUSE F3; CHECK YOUR MODULE!

TAS-0501, TAS-0502, TAS-0511, TAS-0512

RPM-0025	BEEPER
RPM-0026	TRANSFORMER
RPM-0028	SWITCH STANDBY HEAT (TAS-0501, TAS-0502, ONLY) & ALARM (ALL UNITS) (FRONT PANEL)
RPM-0057	ROTARY SWITCH FOR OFF, STANDBY HEAT, NORMAL, BOOST (TAS-0511, TAS-0512, ONLY)
RPM-0058	KNOB FOR RPM-0057
RPM-0029	RECEPTACLE CONNECTOR FOR FRONT PANEL
RPM-0030	MATING CONNECTOR (PLUG) FOR RPM-0029
RPM-0031	PINS FOR RPM-0030
RPM-0032	SOCKETS FOR RPM-0029
RPM-0033	RELAY #1 - ALARM OUTPUT CONNECTOR
RPM-0034	RELAY #2 - BEEPER CONTACTS

Input Power Wiring Diagrams (Option A)

The diagrams on pages 42 through 45 are printed on the back panels of the mainframes. For your convenience, they are depicted here along with additional information.

For information on input wiring for 30 AMP mainframes, contact D-M-E.

Standard input wiring for mainframes, unless specified otherwise at time of order, is 240 VAC, three- phase, 4-wire, 50/60 Hz. (OPTION A). If it becomes necessary to change to another configuration, refer to the appropriate diagram and information on the following pages:

NOTE: For mold power and thermocouple connector wiring information, see pages 23-25.

OPTION A (Standard)

208 - 240 VAC, Three-Phase, 4-Wire Delta or "Y" Power Distribution System

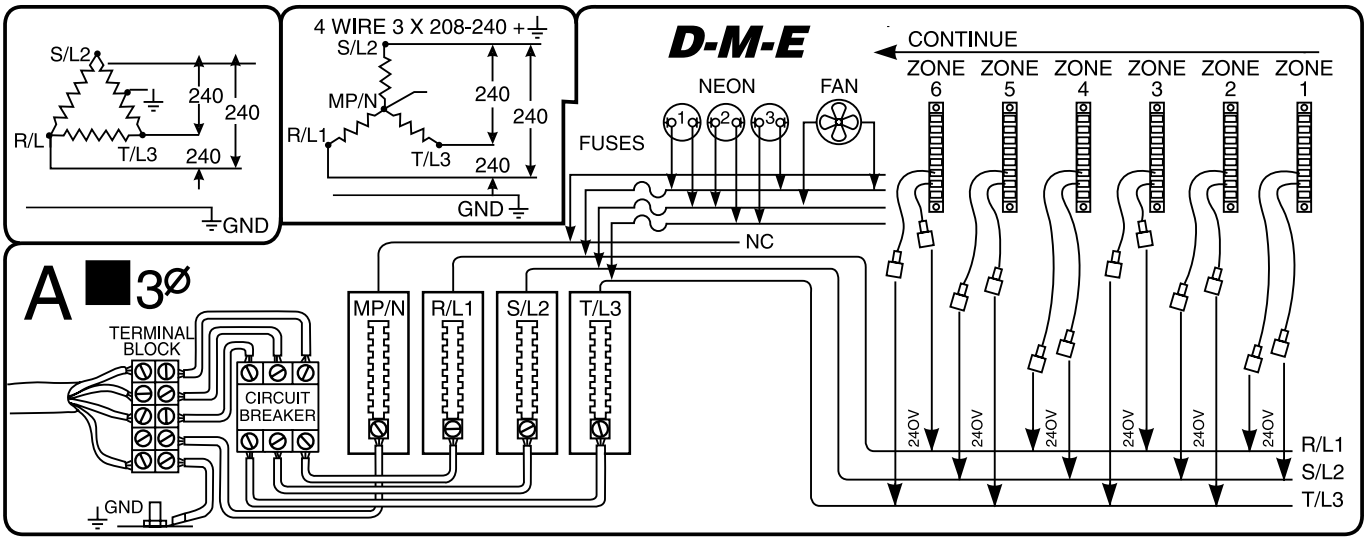

As shown above, each module is powered from one of the three phases. Zone (1), for example, is powered from Phase 1, which is supplied by R/L1 and S/L2. Zone (2) is powered by Phase 2, which is supplied by S/L2 and T/L3. Zone (3) is powered by Phase 3, which is supplied by R/L1 and T/L3.

NOTE: At this point, the sequence repeats itself. For example, Zone (4) is connected the same as Zone (1) to R/L1 and S/L2 and Zone (5) is connected the same as Zone (2) to S/L2 and T/L3 and Zone (6) is connected the same as Zone (3) to R/L1 and T/L3. Zone (7) is then connected to the same phase as Zone (1) and (4), etc. This method of connection assures the greatest likelihood of line balance.

Input Power Wiring Diagrams (Option B)

380 - 415 VAC, Three-Phase, 5-Wire "Y" Power Distribution System

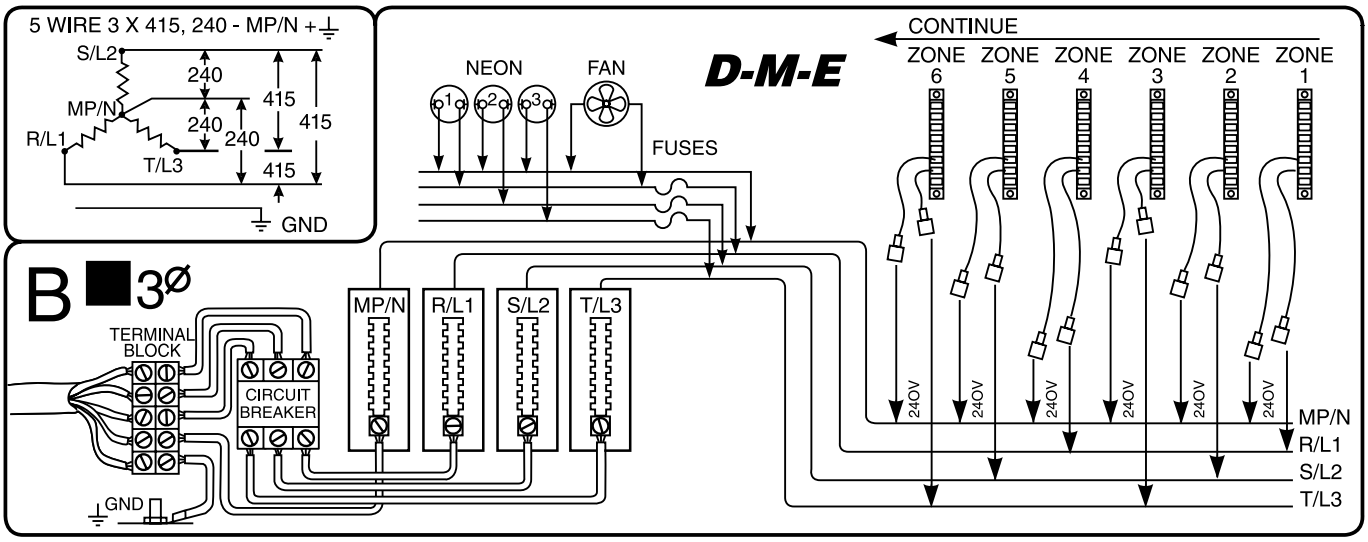

CAUTION NOTE: The voltages from line-to-line in this system are 380 to 415 volts. Severe damage to module and mainframe could result if this type of AC input system is connected to a mainframe wired as OPTION A. This type of power distribution is not found or is very uncommon in the United States but is the most common system found in many other countries worldwide.

WARNING: If export of this system is intended, make sure that wiring is reconfigured for the country where it is to be used.

Please note that the 380-415 Volt Power Distribution System is the same as the "Y" connection shown in OPTION A except for the voltage levels and the use of the MP/N to develop the 240 volt from the 380-415 volt system. Notice that all modules have one line connected to MP/N and the other side connected to one of the three phase lines.

Example: Zone (1) is connected to Phase 1, which is supplied by R/L1 and MP/N.
Zone (2) is connected to Phase 2, which is supplied by S/L2 and MP/N.
Zone (3) is connected to Phase 3, which is supplied by T/L3 and MP/N.
Zone (4) starts the sequence over again. It is connected to Phase 1 R/L1 and MP/N, etc.

Input Power Wiring Diagrams (Option C)

240 VAC, "Two-Phase", 4-Wire

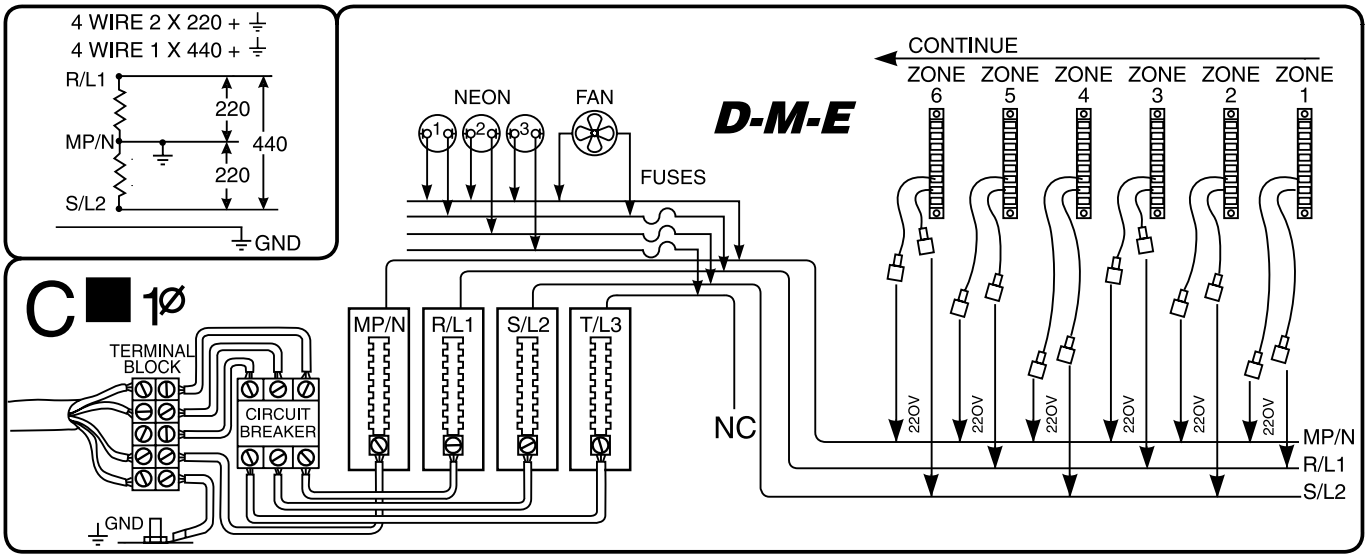

The 240 volt single-phase connection only uses two power lines plus ground.

CAUTION: Only power conductors should be connected through the circuit breaker. Never make ground connections through a circuit breaker. Notice that the output of the circuit breaker is connected to terminal strips R/L1 and S/L2. Also notice that ground is common with MP/N in this system. All zones in this system have to be connected to MP/N and either R/L1 or S/L2. Line balance is achieved by alternating between R/L1 and S/L2.

Example: Zone (1) is connected to MP/N and R/L1.
Zone (2) is connected to MP/N and S/L2, etc.
Zone (3) starts the sequence over again. It is connected to MP/N and R L2, same as zone (1).

Input Power Wiring Diagrams (Option D)

208 - 240 VAC, Single-Phase, 3-Wire or 120 VAC, Two-Phase, 4-Wire

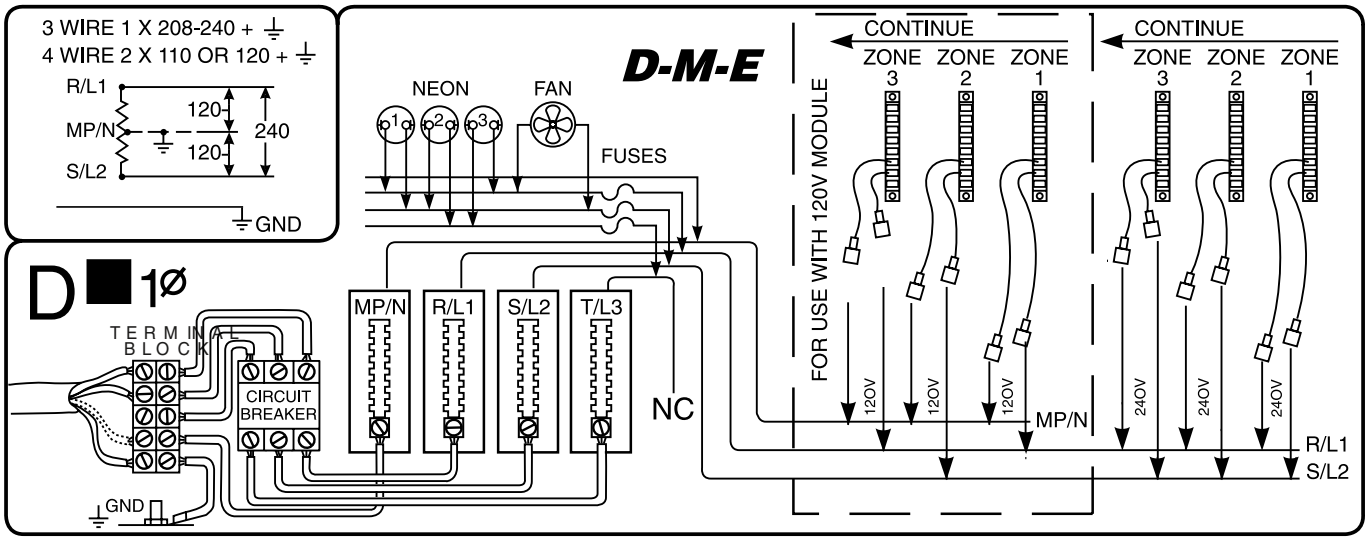

Above diagram depicts two different wiring configurations. One is 208-240 volt, singlephase, 3-wire. Note that lines R/L1 and S/L2 are connected through the circuit breaker to the appropriate terminal strips. All zones will be connected between R/L1 and S/L2. MP/N is common with ground and is not connected through the circuit breaker.

In the 120 volt connection (zone connections shown within the dashed-line area), the 120 volts is developed between R/L1 and MP/N and S/L2 and MP/N. Again, ground and MP/N are not connected through the circuit breaker. Each zone in this system will be connected to MP/N and either R/L1 or S/L2. Line balance is achieved by alternating between R/L1 and S/L2.

Example: Zone (1) is connected to MP/N and R/L1.
Zone (2) is connected to MP/N and S/L2, etc.
Zone (3) starts the sequence over again. It is connected to MP/N and R/L2, same as zone (1).

D-M-E Mainframe Stand Accessory — Cable Storage Basket

FSCB-0001 CABLE BASKET

(Includes (1) 14"- and (4) 6"- long zip ties)

- Compatible with D-M-E Smart Series or Integrity Floor Stands
- Durable molded plastic construction
- Keep all your cables and connectors safely off the floor

Integrity 12/24 zone stand

Smart Series 8 zone

Smart Series 12-zone stand width

Integrity 48-zone stand

INSTALLATION GUIDE

Note: Product color may differ from what is shown.

Step 1

Position Basket on bottom of the D-M-E Mainframe Floor Stand.
Decide if you will attach the basket to the right or left Mainframe Upright Post.

Step 2

Secure Basket to Mainframe Floor Stand with Supplied Cable Ties.

Attach Longer Cable Tie to Side Post

Attach Shorter Cable Ties to Corners

Integrity™ Hot Runner Controls

COMPACT DESIGN,

ADVANCED FUNCTIONALITY

Features and Benefits

ADVANCED FUNCTIONALITY:

- Group or individual setpoints
- Zone slaving
- Input and output diagnostics
- Stand-by Heat, Boost, and Auto Boost
- Programmable setpoint and alarm limits
- Remote control of setpoints via contact closure
- Blown fuse indicator
- Digital calibration
- Industry-standard 15 AMP ratings

INTEGRITY™ — HOT RUNNER CONTROLS RETHOUGHT

D-M-E, a long-time leader in hot runner controls, has totally rethought all aspects of the controller to create the new Integrity temperature control family. New modules. New mainframe. New cabling. New communications. All to make a more compact, more powerful, more flexible control solution that makes your molding operation more productive. And the Integrity product line comes with a three-year warranty.

INNOVATIVE CONTROL

Our objectives for the Integrity Hot Runner Control module were simple — make it powerful, small and affordable. An innovative, patented idea is our zone slaving feature that allows the user to slave one zone to another with a power offset. This enables minor power output adjustments to compensate for master zone variations and solve part-quality problems.

RoHS AND WEEE COMPLIANT

Integrity Hot Runner Controls are acceptable for use worldwide. D-M-E ensures that these products are free of the following substances: Lead, Mercury, Hexavalant Chromium, Cadmium, PBB (Polybrominated Biphenyls, and PBDE (Polybrominated Diphenyl Ethers). At the end of life, customers are asked to return these products to D-M-E for disposal.

Features and Benefits

Powerful. Flexible. Affordable. That's what molders want from today's generation of hot runner controls. With the introduction of our new Integrity™ series of hot runner control solutions, D-M-E delivers the latest in technology.

12-Zone System

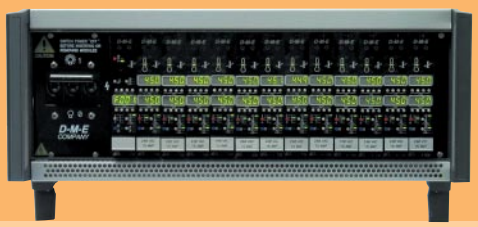

COMPACT

The Integrity™ control module is less than half the size of our popular Smart Series® modules, thereby conserving floor space.

MODULAR

Integrity systems feature an integrated, modular construction that enables convenient swapping of control modules.

24-Zone System

EXPANDABLE

The system can easily grow to meet changing process needs; reconfiguration is quick and easy in 12-zone increments.

EASY-TO-USE

The module front panels are very simple for operators to learn and use.

48-Zone System

STANDARD FEATURES

- Both load line relays allow termination of power during a fault
- Monitoring of load current, ground fault current, and line voltage
- K-type thermocouple support

Modular, Expandable Hot Runner Control Solutions

MODULAR, EXPANDABLE HOT RUNNER CONTROL SOLUTIONS

We Thought Outside the Box to Build a Better Box

Integrity mainframes are offered in 12-zone increments to match your processing needs. Most systems feature a standard 100 Amp breaker for increased heater wattage capability. And every slot is rated at 15 Amps to enable zone configuration flexibility and interchangeability. The D-M-E patented bus bar design (patent #6674006) enables easy wiring reconfiguration with a simple jumper-based system for more rapid power input adjustments. Fuses are mounted for easy access and replacement. Stacked mainframes have separate power inputs but inter-connect with a single cable to allow inter-module communications across mainframes. Each Control Module is completely galvanically isolated from the others so grounded or ungrounded T/C's can be used.



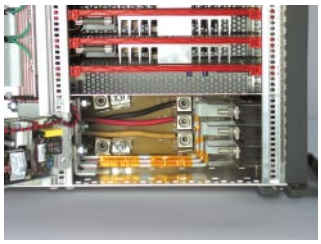


Connecting the Input Power has never been easier. With Power disconnected, snap off and remove side covers, remove the top and swing the Power Supply out of the way. Have your Electrician feed the proper local electric code wires, which connect to the 100 Amp 240 VAC Breaker in the Mainframe via the power lugs. The lugs accept #2/0 to #14 wires, straight in from the rear into these terminal lugs. Tighten down with a 3/16 Hex Wrench. Swing the power supply back down, snap the Top cover and then the side covers on. The System is ready to connect to your plant power if it matches the Power Options for the Mainframe.

Power Options: The default "Option A" wiring can be changed if necessary by just reconfiguring the 5 Input Power Configuration Straps shown below at left. All the zones shown below at right are then automatically balanced on the New Power Option Selected. Rewiring of all the individual zones is no longer required. (See next page for more details on Power Hookup Options)

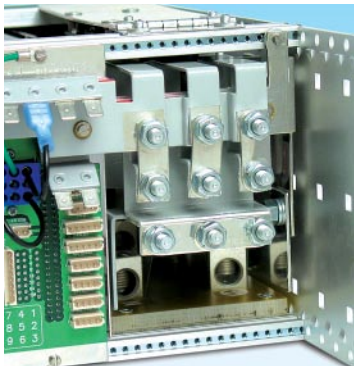
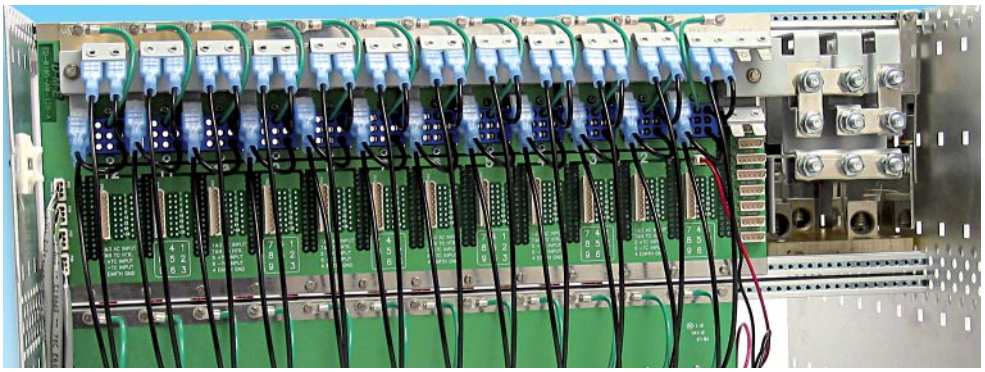

Even a Smarter Cable and Connector

Integrity's innovative design requires only a single connection for 12 heater power and thermocouple zones. The power to the cables is cut for additional safety and is incorporated with the Cable Connected Signal (with systems using the IFM1000 Modules) described in another New D-M-E Patented Technology (# 6,813,537).


Power Hookup Options

Customer Power Hookup Options for Plant Power Requirements – See Integrity Users Manual for full details. Your electrician simply changes the "Input Power Configuration Straps" and the entire 12-, 24- or 48-zone frame is re-wired! Factory Default is Option A.

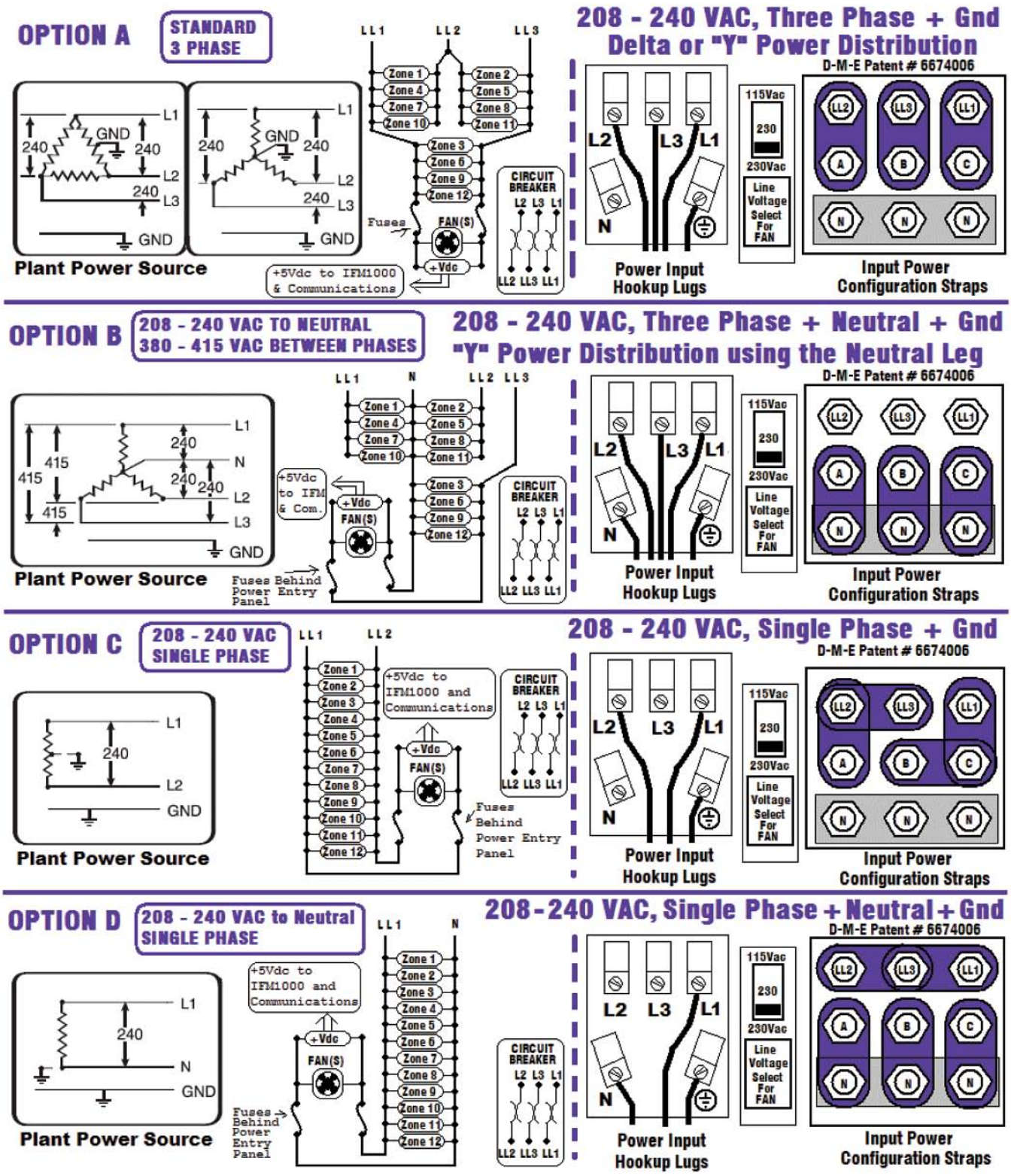

ICM1502 Integrity Module Overview

ICM1502 INTEGRITY™ CONTROL MODULE HIGHLIGHTS
(See Integrity Users Manual for Full Details)

ICM1502 Integrity™ Control Module - Quick Overview

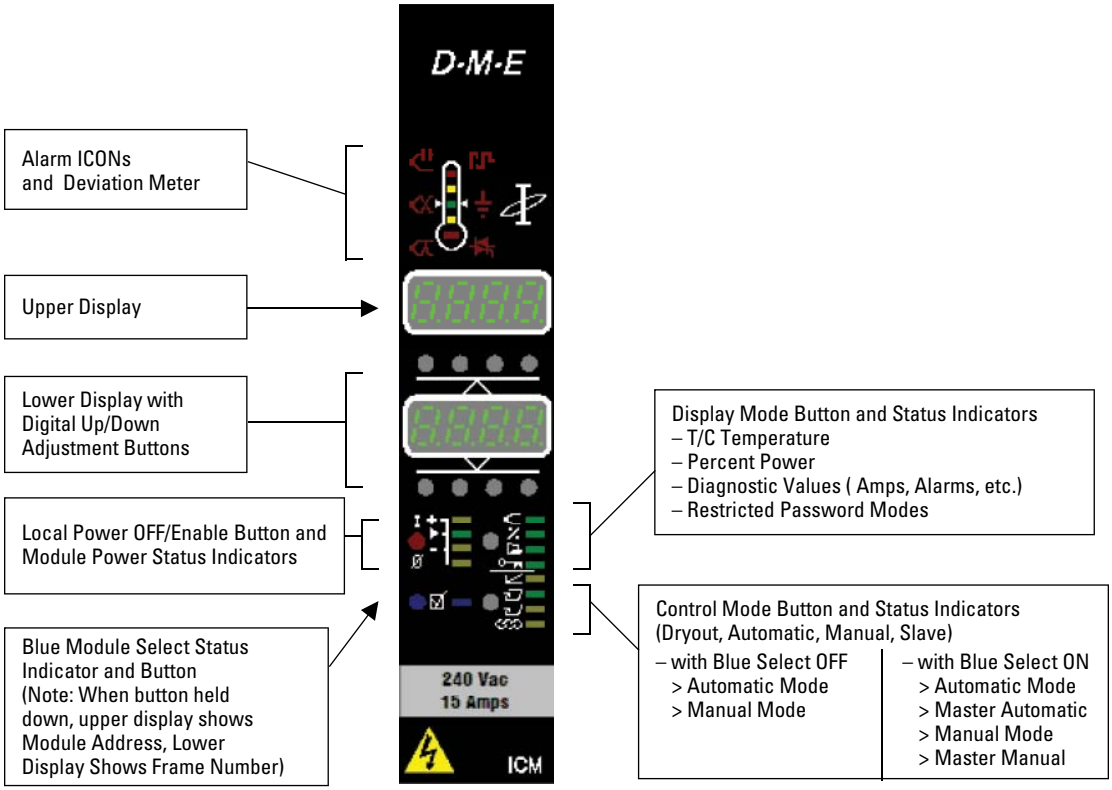

Alarm ICONS

4.2. ICM - Alarm Icons (also see - *Display Mode - Diagnostic Menu Display Items - Alarm Values in d.A.xx*)

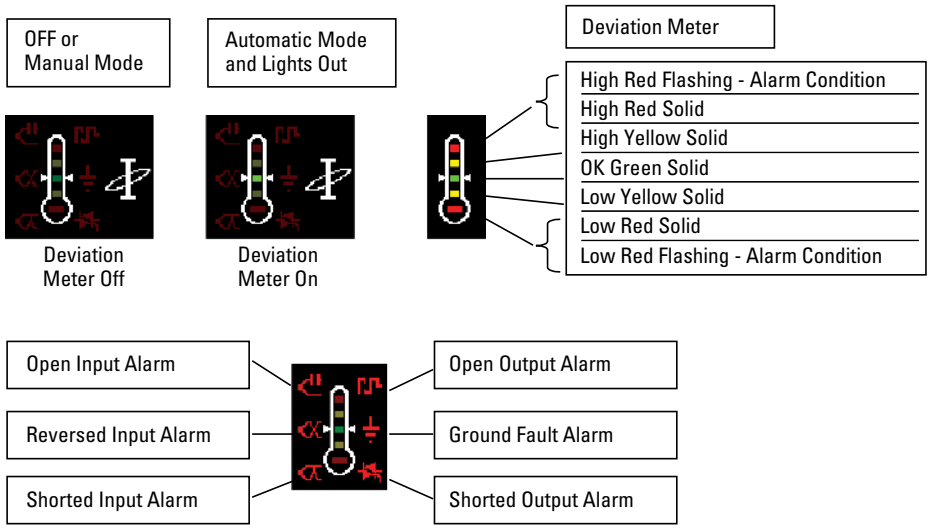

ICM1502 Integrity Module Overview

ICM1502 INTEGRITY™ CONTROL MODULE HIGHLIGHTS - CONTINUED

NEW Advanced Diagnostic and Detailed Alarm Status Features (See Integrity Users Manual for Full Details)

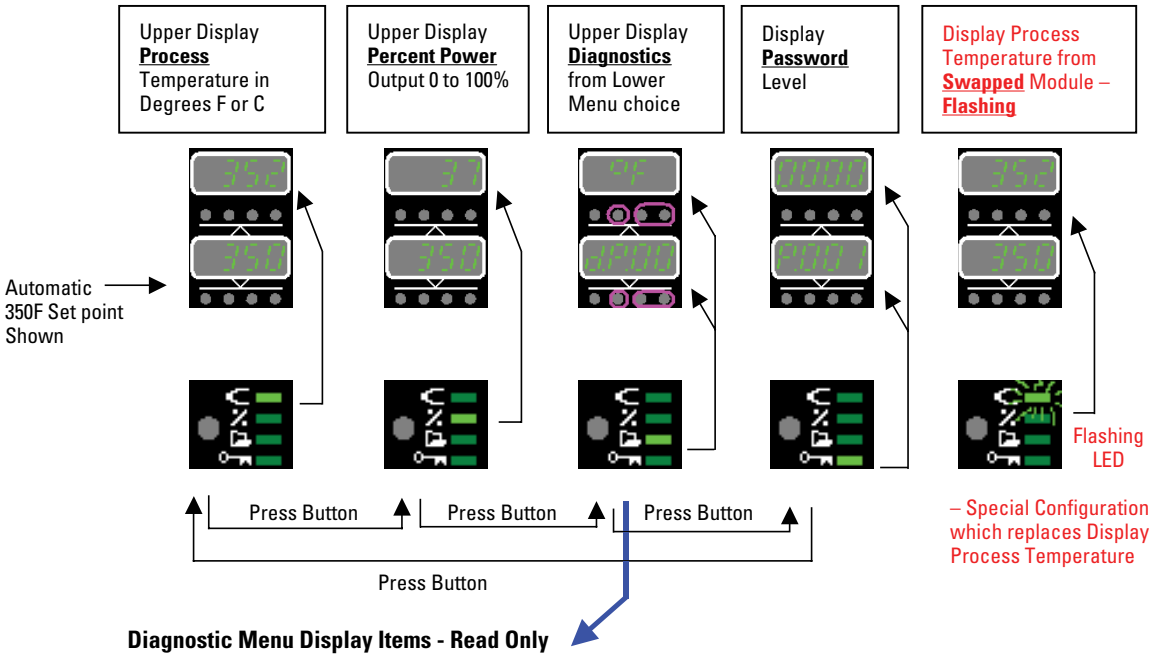

Diagnostic Menu Display Items - Read Only

Process Values in d.P.xx

Lower Display	***Upper Display***	***Description***
d.P.00	°F	Engineering Units (Degrees F or Degrees C)
d.P.01	1. 51 **	Load Current in Amps (0.00 to 15.00) "Peak RMS Amps"
d.P.02	237 **	Line Voltage (95 to 265 Vac)
d.P.03	60	Hertz Detection (50 or 60)
d.P.04	.01	GFI Ground Fault Amps
d.P.05	355	Wattage of Heater Maximum Available (P=VxI)
d.P.06	158	Resistance of Heater in Ohms (R=V/I)
d.P.07	1	Mold Terminal Box Number if connected
d.P.08	5	Zone in Mold Terminal Box if connected

** **NOTE:** Values will Flash in Phase Angle Firing Mode when not Accurate.

Alarm Values in d.A.xx (also see - ***ICM - Alarm Icon's***)

Lower Display	***Upper Display***	***Description***
d.A.00	nOnE	Alarm Horn ("nOnE" or LA Latched Alarm or A Alarm)
d.A.01	OFF	Shorted Output Alarm (On or OFF)
d.A.02	OFF	Open Output Alarm (On or OFF)
d.A.03	OFF	Ground Fault Alarm (On or OFF)
d.A.04	OFF	Shorted Input Alarm (On or OFF)
d.A.05	OFF	Reversed Input Alarm (On or OFF)
d.A.06	OFF	Open Input Alarm (On or OFF)
d.A.07	OFF	Heat Sink Alarm (On or OFF)
d.A.08	OFF	Load Fuse Failure Alarm (On or OFF)
d.A.09	OFF	Deviation Horn Alarm (Process Deviation Band- On or OFF)
d.A.10	OFF	Over Current (Amps) Detection (On or OFF)
d.A.11	OFF	Dryout Alarm - Dryout Lock Mode Only (On or Off)

NOTE: The process values in d.P.01, d.P.02 and d.P.04 are very useful diagnostic values but are not meant to replace an Industrial Quality DVM Meter, even when calibrated properly. Typical accuracies are +/-5% F.S.

Values in d.P.05 and d.P.06 are calculated from d.P.01 and d.P02.

IFM1000 Integrity Module Overview

IFM1000 INTEGRITY™ FRAME MODULE HIGHLIGHTS
(See Integrity Users Manual for Full Details)

IFM1000 Integrity™ Frame Module - Quick Overview

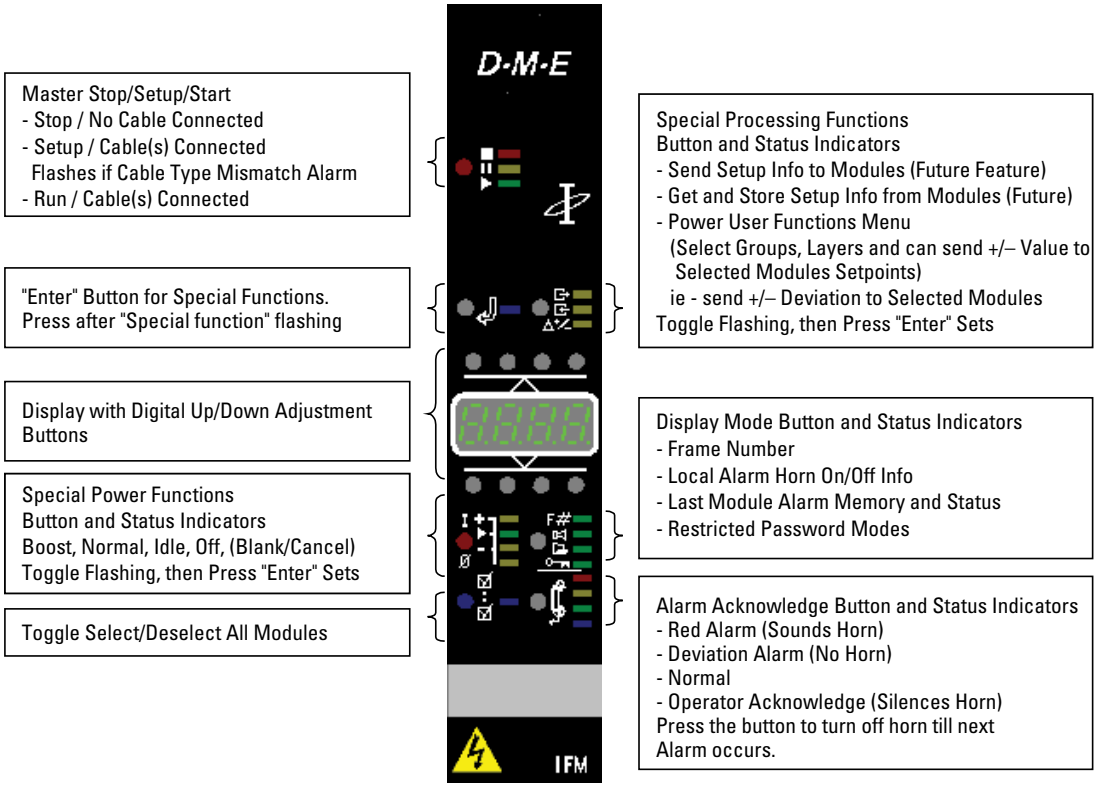

Change All "BLUE LIGHT" Selected Modules Set Point by a +/– Deviation Value.

Send Delta +/– Value to All BLUE ON Selected Modules

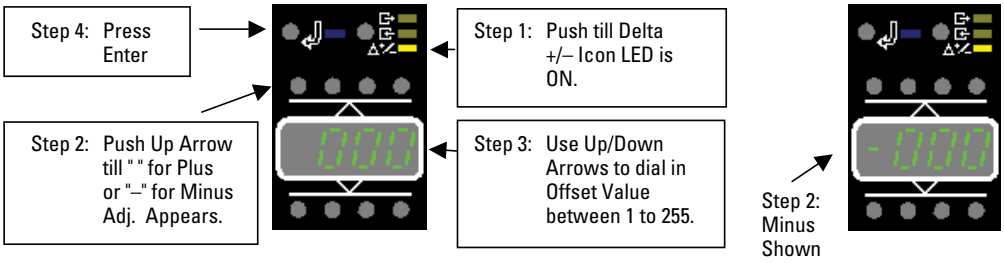

ICM modules with BLUE LEDs ON will add or subtract the Offset value from its current Auto Set-point.

IFM1000 INTEGRITY™ FRAME MODULE HIGHLIGHTS - CONTINUED

Machine Interface I/O

5.6. IFM - Alarm Output Connector - Located on Fan Panel on Rear of Mainframe.

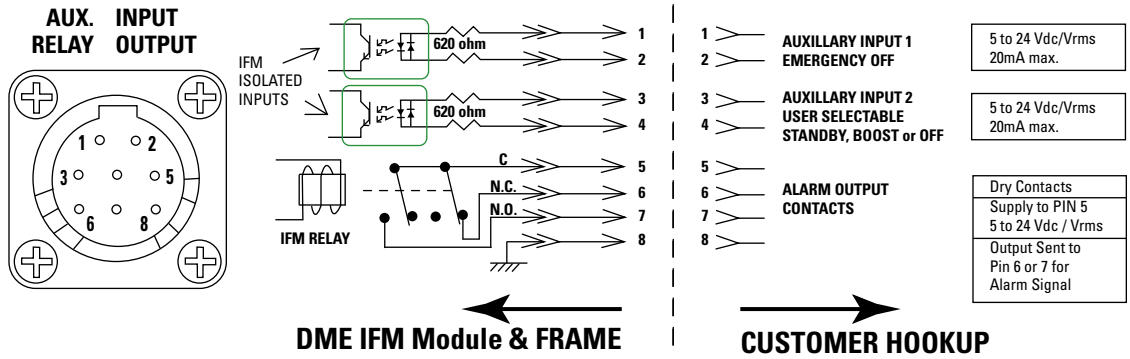

Changing Frame Number When Linking Multiple Integrity Frames Together

Following procedure shows how to change Frame Module Frame Number to F.002.

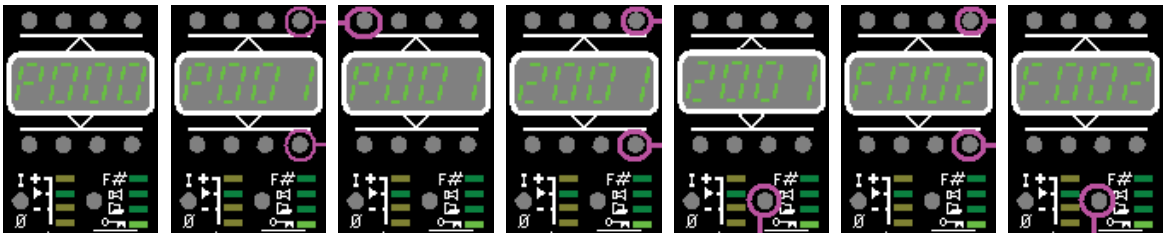

Password Menu | Select Level Use Up/Down Above ".001" | Swap/Select Level - Press Above "P" | Enter Password for Level | Press Enter | Adjust Frame # | Press Enter

Follow Procedure for Entering Password Levels Below.

5.8.1. Password Level 1 - Frame Number Valid 1–223, default 1.
➢ Each Integrity Frame Module must be unique. This procedure allows the operator to change the Frame Number.
5.8.1.1. Enter Password Level P.001
5.8.1.2. Enter Password for this Level = 2001
5.8.1.3. Adjust Frame Number F.xxx to desired value. Ie F.002. Note: all units reboot.
5.8.1.4. Press Enter. Back to P.001.

Cable Wiring Information

INTEGRITY™ CABLE WIRING INFORMATION

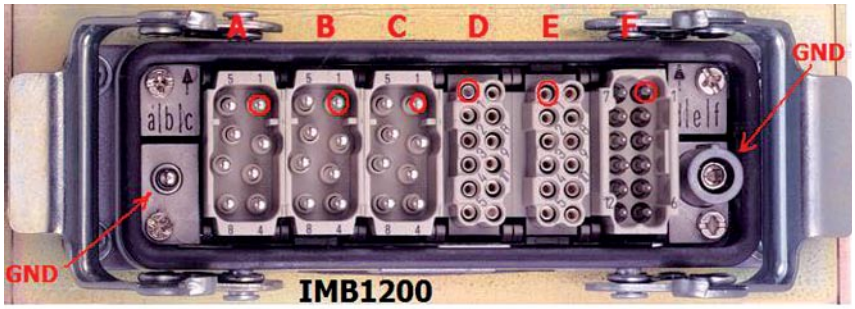

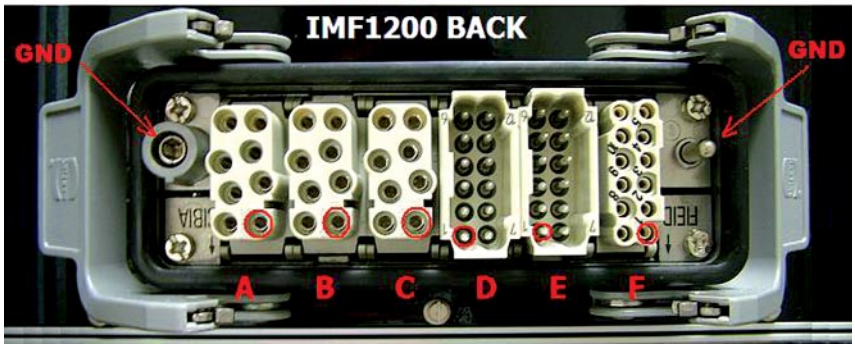

Heater Power Pins	Control zone Heater
A–1	1
A–2	2
A–3	3
A–4	4
A–5	1
A–6	2
A–7	3
A–8	4
B–1	5
B–2	6
B–3	7
B–4	8
B–5	5
B–6	6
B–7	7
B–8	8
C–1	9
C–2	10
C–3	11
C–4	12
C–5	9
C–6	10
C–7	11
C–8	12

T/C Pins	Control zone J T/C
D–1	*+1 t/c*
D–2	*+2 t/c*
D–3	*+3 t/c*
D–4	*+4 t/c*
D–5	*+5 t/c*
D–6	*+6 t/c*
D–7	*–1 t/c*
D–8	*–2 t/c*
D–9	*–3 t/c*
D–10	*–4 t/c*
D–11	*–5 t/c*
D–12	*–6 t/c*
E–1	*+7 t/c*
E–2	*+8 t/c*
E–3	*+9 t/c*
E–4	*+10 t/c*
E–5	*+11 t/c*
E–6	*+12 t/c*
E–7	*–7 t/c*
E–8	*–8 t/c*
E–9	*–9 t/c*
E–10	*–10 t/c*
E–11	*–11 t/c*
E–12	*–12 t/c*

Cable Connect Pins
F–1
F–2
F–3
F–4
F–5
F–6
F–7
F–8
F–9
F–10
F–11
F–12

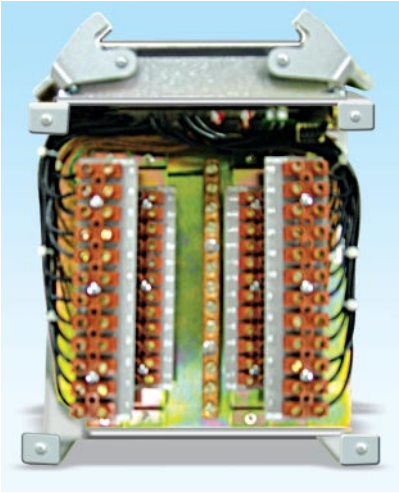

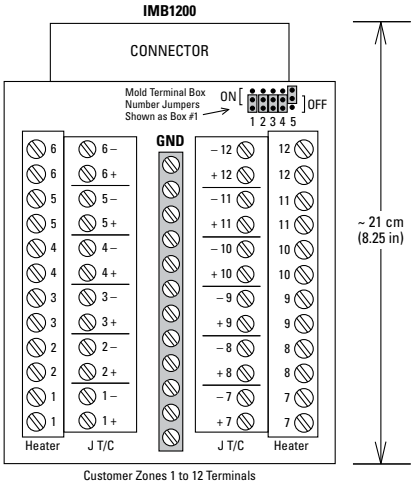

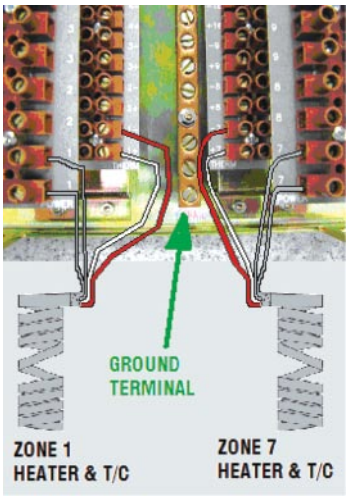

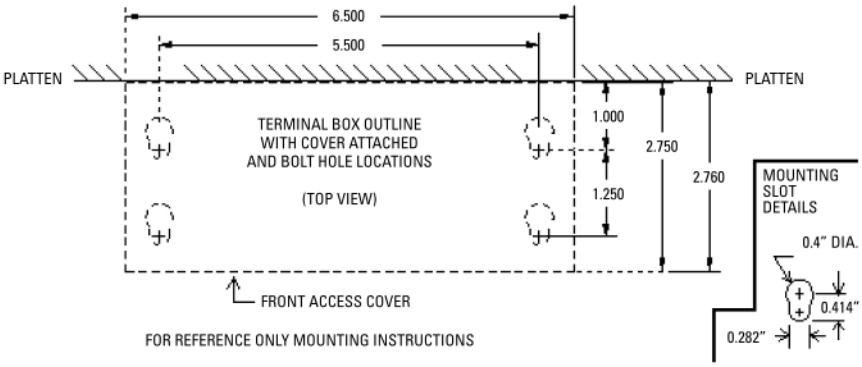

IMB1200 Mounting Box Dimensions – Leave Room for Cover Removal and Access.

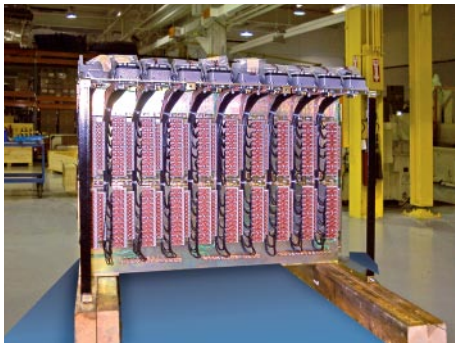

D-M-E Custom 120 zone (shown) and 72 zone Integrity™ Mold Power Boxes Available – Special Order

SMART SERIES AND INTEGRITY CONVERSION PRODUCTS

Not Recommended for New Designs

Cable Connect Safety Features Not Supported Using These Cables

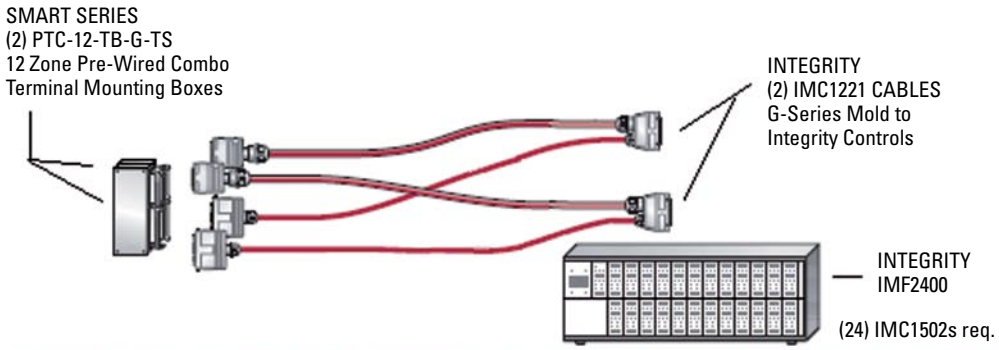

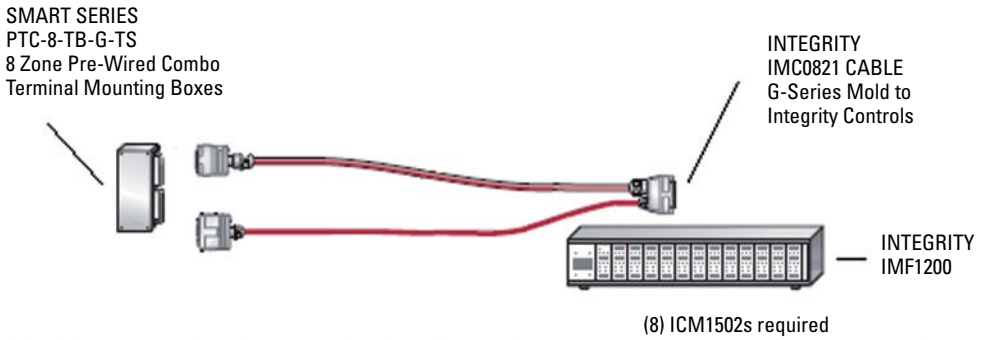

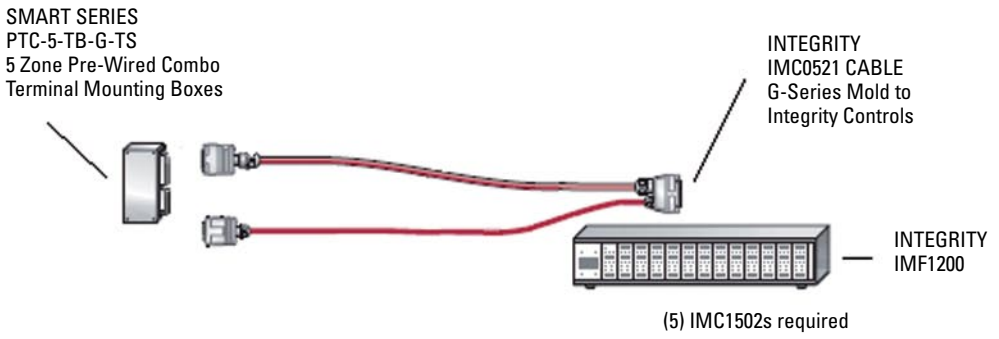

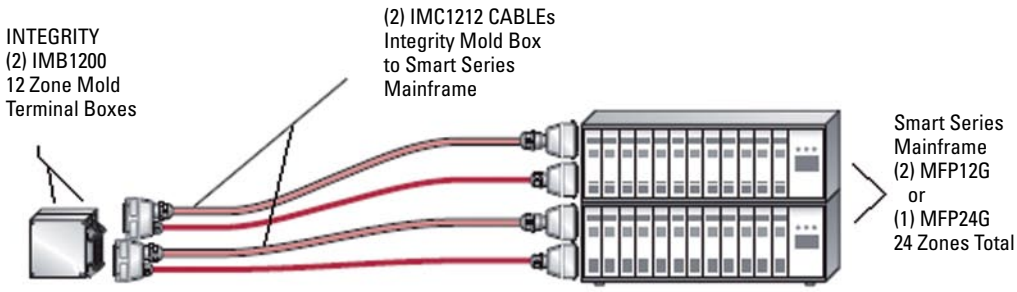

Integrity Configuration Accessories

STACKING INTEGRITY™ MAINFRAMES

A 36-Zone System with an IMF1200 placed on top of an IMF2400 with interconnecting cables to allow communications.
Shown using one ICAN1700 DMECAN Daisy Chain Cable and one CTP0120 DMECAN Termination Plug.
Each extra mainframe that is stacked requires another ICAN1700 DMECAN Daisy Chain Cable and Plant Power Hookup.

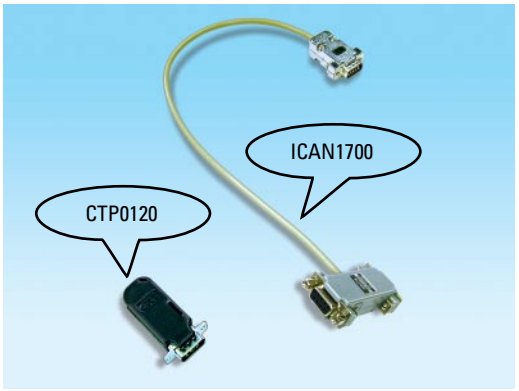

NOTE: Each Daisy Chained Frame ID in the IFM1000 must be set to a unique ID. Ex. F.001, F.002, F.003, etc. See user manual for more information relating to setting the FRAME ID on the IFM1000 module.

INTEGRITY™ MAINFRAME STANDS

IFSS1000 Straight Floor Stand
(Shown with IMF4800)

IFSA1000 Angled Floor Stand
(Shown with IMF2400)

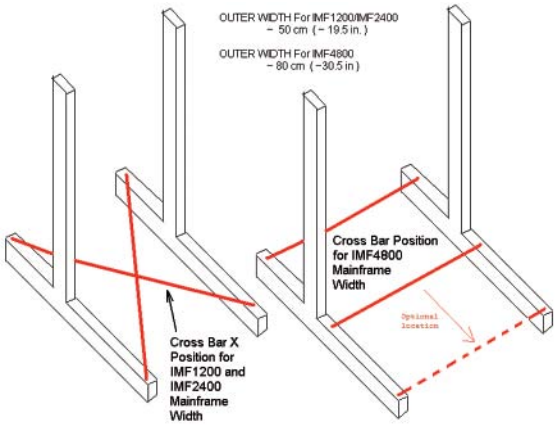

Adjust Floor Stand: X cross bars for IMF1200 & IMF2400; straight for IMF4800

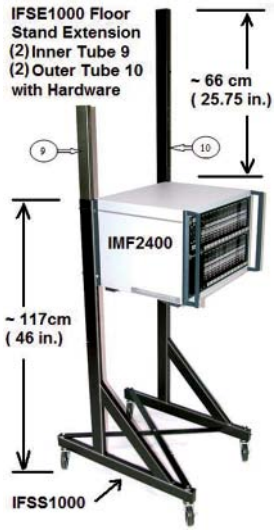

IFSE1000 Floor Stand Extension

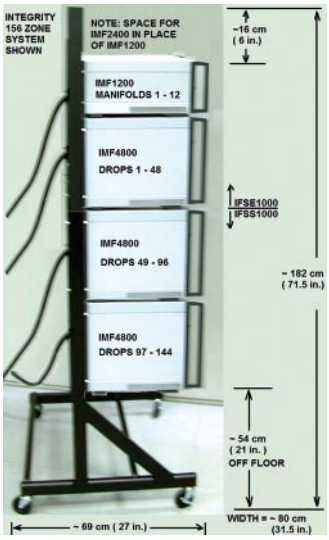

Side View Mounting/Stacking Order

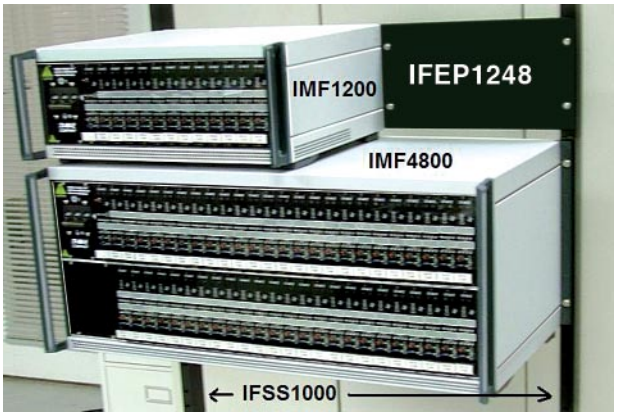

12-Zone Extension Plate Shown (24-Zone Ext. Plate Not Shown)

Integrity™ Component Ordering Information

INTEGRITY™ ITEM NUMBERS

Integrity™ 24-Zone System Overview

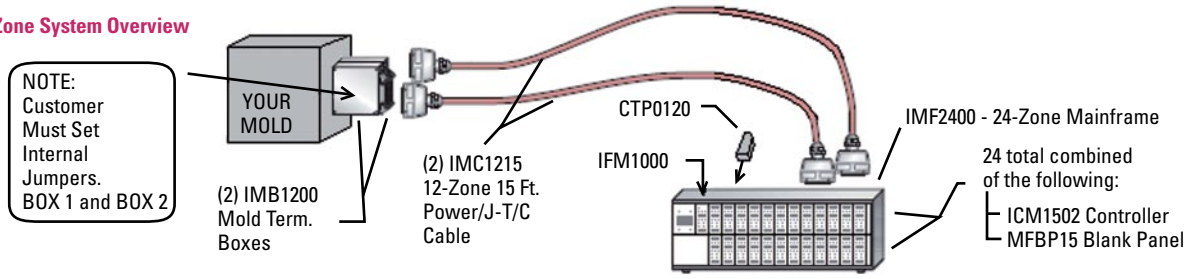

24-Zone Integrity™ System Shown

Qty.	Item #	Description
1	IMF2400	24-Zone Mainframe
1	IFM1000	Frame Module
2	IMC1215	12-Zone 15 Ft. Cable
2	IMB1200	Mold Terminal Box
1	CTP0120	Termination Plug

24 Total - ICM1502 and/or MFBP15

12-Zone Integrity™ System

Qty.	Item #	Description
1	IMF1200	12-Zone Mainframe
1	IFM1000	Frame Module
1	IMC1215	12-Zone 15 Ft. Cable
1	IMB1200	Mold Terminal Box
1	CTP0120	Termination Plug

12 Total - ICM1502 and/or MFBP15

48-Zone Integrity™ System

Qty.	Item #	Description
1	IMF4800	48-Zone Mainframe
1	IFM1000	Frame Module
4	IMC1215	12-Zone 15 Ft. Cable
4	IMB1200	Mold Terminal Box
1	CTP0120	Termination Plug

48 Total - ICM1502 and/or MFBP15

D-M-E ITEM #	INTEGRITY BASE PRODUCTS DESCRIPTION
ICM1502	15 Amp 240 VAC 3,600 Watt Temperature Control Module – (1 for each control zone required)
IFM1000	Frame Module (1 used per Mainframe – uses special non-controller reserved slot)
IMF1200	12-Zone Mainframe (Option A Standard – 100 Amp breaker, average full 3,600 Watts per zone balanced)
IMF2400	24-Zone Mainframe (Option A Standard – 100 Amp breaker, average 1,875 Watts per zone balanced)
IMF4800	48-Zone Mainframe (Option A Standard – 100 Amp breaker, average 937 Watts per zone balanced)
IMB1200	12-Zone Mold Terminal Mounting Box with J type T/C (1 for each 12 zones of control required.)
IMC1215	12-Zone 15-Foot Cable (Power and J Type T/C in one cable – 1 for each 12 zones of control required)
CTP0120	DMECAN termination plug (1 for each standalone or daisy-chained stacked mainframe system)
MFBP15	Blank Panel

D-M-E ITEM #	INTEGRITY ACCESSORY PRODUCTS DESCRIPTION
IFSS1000	Integrity Floor Stand Straight
IFSA1000	Integrity Floor Stand Angled
IFSE1000	Integrity Floor Stand Extension
IFEP1248	Extension Plates for IMF1200 to Mount with IMF4800 width Mainframe on common Floor Stand
IFEP2448	Extension Plates for IMF2400 to Mount with IMF4800 width Mainframe on common Floor Stand
ICAN1700	DMECAN Daisy-Chain Communications Cable (1 used with each stacked mainframe after first Frame)
IFMCCONN	IFM – Alarm Output connector for Machine Interface I/O (1 used on rear of each Mainframe)

D-M-E ITEM #	SMART SERIES® and INTEGRITY™ Conversion Products
IMC1212	12-Zone, 15-Foot Conversion Cable from IMB1200 Integrity Mold Box to Smart Series® Mainframe
IMC1221	15-Ft Conversion Cable, 12-Zone Smart Series® Mold Connectors to Integrity™ Mainframe (zones 1–12)
IMC0821	15-Ft Conversion Cable, 8-Zone Smart Series® Mold Connectors to Integrity™ Mainframe (zones 1–8)
IMC0521	15-Ft Conversion Cable, 5-Zone Smart Series® Mold Connectors to Integrity™ Mainframe (zones 1–5)

D-M-E ITEM #	INTEGRITY REPLACEMENT PARTS
IMC5012	12-Zone Integrity Mold Connector with 12 in. power & J type T/C wires attached & Cable Select Board
ABC15	F1 & F2, IMC1502 Main Load Fuses 15 AMP 250 VAC FUSE (2 required per module)
RPM0102	F3, IMC1502 Transformer Fuse, 100mA time delay 250 VAC TR5 Style Fuse – 1 per module
RPM0103	2 Integrity Mainframe Fan & Aux Power Fuses, 400mA time delay 250 VAC 5 x 20 mm style fuse
RPM0104	100 AMP 3 Phase 415 VAC rated breaker
RPM0105	Mainframe 5 Vdc 20 Watt Switching Power Supply
RPM0106	240VAC/120VAC Mainframe Fan

Advantages of the Integrity™ Control System

1. Fully isolated thermocouple input means highly accurate temperature readings and prevents heater current from penetrating the controls.
2. A pair of relays in each controller prevents a shorted triac from damaging a heater. If a runaway heat situation is detected, the relays open to prevent the heater from being damaged.
3. Each Integrity controller monitors line voltage, current drawn by the heater, damp heater leakage.
4. Since each controller monitors line voltage and current, Integrity controllers can calculate and display the power (watts) being delivered to the heater, and calculate the resistance of the heater. This provides the capability for users to detect hot runner system problems.
5. Each controller monitors its heat sink temperature. This allows the controller to determine if the control system has a defective fan or an air flow blockage.
6. Integrity controllers are switchable between phase angle fire and zero cross fire.
7. The controllers can be switched between J- and K-type thermocouples without the need for recalibration. (Mainframes should be wired for K type, however).
8. Despite being a modular system, Integrity modules can be slaved. A D-M-E patented feature lets users set a power offset between the master and the slave so small power adjustments can be made.
9. Set points can be input before turning power on to the heaters.
10. The system has a built-in alarm output and offers relay contacts for triggering external alarms or shutting down the injection process.
11. Auxiliary inputs are available for remote control of the system (ex. idle heat)
    Hot runner systems can use the classic D-M-E Smart Series connection system or the new combined power and thermocouple connections that save space on top of the mold. Custom cables are always available from D-M-E.

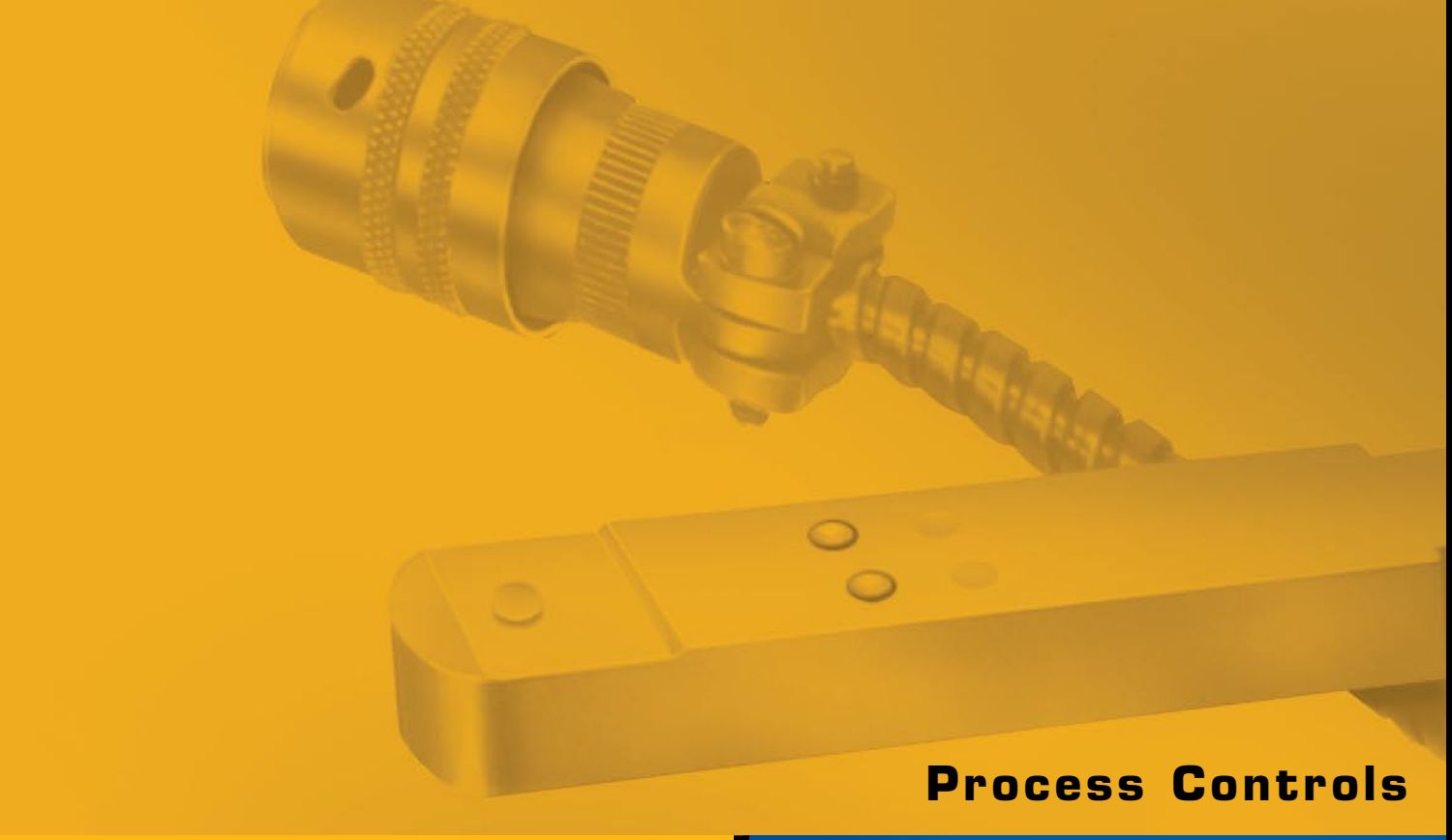

Process Controls

ACHIEVING OPTIMAL MOLDING RESULTS WITH INJECTION PROCESS CONTROLLERS, BUTTON SENSORS AND SLIDE SENSORS

Portable Cavity and Hydraulic Pressure Monitor and Controller

- COMPACT AND SELF CONTAINED
- PROVIDES DIGITAL DISPLAY READOUT OF HYDRAULIC AND CAVITY PRESSURES
- PROVIDES AMPLIFIED OUTPUT OF PRESSURE SIGNAL
- 1 AMP RELAY OUTPUT FOR CONTROL OF BOOSTER PUMP CUTOUT
- PROVIDES EASY CALIBRATION OF D-M-E CONSTANT CALIBRATION SENSORS

The IPC-01-01 Injection Process Controller is a portable device that provides an inexpensive means of controlling peak plastics pressure in the mold. Peak pressure control is accomplished using a mold pressure sensor and a single setpoint to control filling and packing of the mold. By closely monitoring and controlling cavity pressure the user will reduce cycle time, reject rates and plastics usage. The controller operates the booster pump for the absolute minimum time required to fill and pack the cavities, significantly reducing electrical power consumption.

The IPC-01-01 controller uses a technique known as Dynamic Pressure Control (DPC). DPC maintains a more constant peak cavity pressure than machine timers and limit switches, regardless of plastic viscosity changes. This is accomplished by switching from High Volume (Fill) to Low Volume (Hold) injection at a predetermined cavity pressure.

Because of a direct correlation between peak cavity pressure and part weight (and therefore part size), accurate control of peak cavity pressure means more consistent part production.

Because part weight range can be reduced by using DPC, the average part weight can be reduced without occurrences of short shots. This translates into potential reduction in material usage. Increased repeatability in part weight also means less scrap as a result of short shots, over packed and flashed parts. Reducing these occurrences can also reduce associated wear and damage to tooling.

The IPC offers the three most requested features in a pressure monitor/controller:

1. Display of the pressure reading, including the peak pressure that occurred.
2. Amplification of the pressure signal for use by other equipment.
3. A relay contact set for direct control of the molding machine's booster pump cutoff function.

The IPC uses an injection signal or other switch closure to arm the holding of the peek pressure that occurred during the shot. The peak pressure reading is held until the end of the injection sequence.

A connector on the rear of the IPC provides the amplified pressure signal. A zero to 1, 2, 5, or 10 VDC (or 4 to 20 mA DC) signal directly corresponds to a zero to 20.000 PSI pressure. This signal can be routed to strip chart recorders, plant wide monitors or other equipment. The signal can also be input into molding machines offering closed loop pressure control but that lack the necessary amplifiers for the sensing equipment.

The IPC offers a one amp, form C (normally open, normally closed) relay contact set for direct control of the machine's booster cutout function. The relay contacts are also gold plated for switching of low level signals such as the potentiometers used to set the machine's injection velocity. Many control relays are not capable of switching such sensitive signals. The relay contacts carry a voltage rating of up to 120 VAC.

The IPC is designed for use with D-M-E's Constant Calibration sensors but can be used with other manufacturers strain gage based sensors as well.

FRONT PANEL CONTROLS AND INDICATORS

The IPC offers quick easy calibration of pressure sensors via front panel adjustments. Calibration is quickly performed by pressing a push button and then adjusting the calibration setting.

A rotary switch allows for rapid selection of the pressure sensor and ejector pin size. A second rotary switch allows for selecting what is displayed: The pressure signal with peak hold, the pressure signal without peak hold or the DPC pressure setpoint.

A DPC light illuminates when the mold (or hydraulic) pressure reaches setpoint. This is an indication that the IPC's control relay has activated.

A toggle switch allows the user to override the control function while allowing for continued monitoring of pressures. A high accuracy ten-turn potentiometer allows for input of the pressure setpoint for booster cutout.

A three and one-half digit display allows for direct readout of pressures up to 19,990 PSI. This is displayed as pressure (times 10) for mold pressure.

A UL, CSA, VDE approved power switch allows the user to turn the IPC on and off from the front panel. Internal fuses (not shown) protect the unit from both sides of the AC line voltage. While the standard unit (IPC-01-01) is constructed for 120 VAC use, an optional IPC-01-02 is available. The unit is easily converted between 120 and 240 VAC operation. The 120 VAC unit comes with a standard wall outlet plug.

Portable Cavity and Hydraulic Pressure Monitor and Controller

OPERATION

The user plugs the IPC into a standard wall outlet. If machine control or automatic hold of the peak pressure signal is desired, a normally open relay contact is attached via the rear panel connector. If control of the machine is desired, the IPC's control relay is wired back to the machine via the same connector. A D-M-E pressure sensor is then attached via the rear panel and the unit is set to the appropriate pin size calibration. The pressure offset value is adjusted to zero with the front panel ZERO adjustment. The CAL push-button is pressed in and the CAL adjustment is then set for 8900 PSI. The user then sets IPC to the actual pin size being used and the IPC is ready to run. With the IPC set to MONITOR, the user notes and records the peak pressure obtained during acceptable part production. The SETPOINT is adjusted to 50 to 80% of the recorded peak. The user then places the IPC into the CONTROL mode and adjusts the SETPOINT until the desired peak pressure is achieved. It will be necessary to add time or distance to the machine's booster setting for the IPC to take control. The amplified signal output can be connected to process recording equipment or a molding machine's pressure signal input.

REAR PANEL (LEFT TO RIGHT)

Analog Output: is a standard 1/4 inch stereo headphone jack that outputs an amplified pressure signal of zero to 1, 2, 5 or 10 VDC (or 4 to 20 mA DC) corresponding to zero to 20,000 PSI.

D-M-E Sensor: accepts a D-M-E slide, or button sensor or related extension cable. Also accepts other sensors via a conversion cable.

Machine Interface: provides the injection forward and booster cutout wiring connections to the molding machine.

Power Input: provides 120 VAC (standard) or 240 VAC (optional) power for operation.

IPC-01-01 SPECIFICATIONS:

Accuracy:	Analog output and digital display: +/–1% full scale Setpoint: 0.8% of full scale
Repeatability:	Analog output and digital display: +/–0.5% full scale Setpoint: 0-25% of full scale
Recorder Output:	Proportional to cavity pressure. Zero to 1, 2, 5 or 10 VDC (or 4 to 20 mA DC) corresponds to zero to 20,000 PSI
Control Span Range:	Zero to 20,000 PSI
Temperature Range:	50° to 130°F
Power Required:	115 VAC (105-125), 50-60Hz
Zero Drift, Analog Out:	Long Term: 0.1%/month, with temperature 0.1%/°F
Control Relay:	1 amp, form C, 0-120 VAC, VDC
Injection Forward In:	normally open contact closure, less than 10 milliamps
Dimensions:	7.2" wide, 2.7" high, 8.6" deep

ORDERING INFORMATION

CONTROLLER

Includes 19 foot integral power cable, mating control and analog output connectors and two spare fuses. Pressure sensors and extension cables must be ordered separately.

Catalog Numbers:	**IPC-01-01**	(120 VAC standard)
	IPC-01-02	(240 VAC optional)
Fuse Requirement:	**(2) ABC-1**	**fuses**

SLIDE MOLD PRESSURE SENSORS

Catalog Numbers:	**SS-405C**	(500 pound)*
	SS-406C	(2000 pound)*

BUTTON MOLD PRESSURE SENSORS

Catalog Numbers:	**BS-411C**	(125 pound)
	BS-412C	(500 pound)*
	BS-413C	(2000 pound)*
Requires Extension:	**BSC-10**	(10 foot cable)

EXTENSION CABLES

Catalog Numbers:	**SSC-10**	works with all sensors, 10'
	BSC-10	one req'd for button sensor
	SI-900	JIG box with 15' cable, works with all sensors.

***NOTE:** 500 pound sensors are recommended for use with ejector pins from 1/16 to 3/16 inch diameters. 2000 pound sensors are recommended for use with ejector pins from 3/16 to 1/2 inch diameters. The 125 pound Sensor is recommended for 1/16 inch or less diameter pins.

DESIGNED, MANUFACTURED AND TESTED IN THE U.S.A.

Button Mold Pressure Sensors

Both Models Available in 12, 24 and 36 inch lengths

D-M-E Button Mold Pressure Sensors are used for measuring pressures in conjunction with auxiliary recording and control equipment in injection, die cast and transfer molds. They provide a full-scale output of 2 millivolts per volt of excitation.

Three Models
Available in 125, 500 and 2000 pounds force.

Hermetically Sealed
Allows sensor to be used where moisture is present.

NIST TRACEABLE
SUPPLIED WITH CERTIFICATE OF CALIBRATION

Permanently Installed
Minimizes damage due to mishandling of sensors.

Temperature Compensated
Special amplifiers that compensate for temperature changes are avoided.

Constant Output
Because each sensor is electrically identical, each sensor has the same output. This similarity practically eliminates the need to recalibrate the readout system when sensors are exchanged. Only a slight readjustment of the zero setting of the readout system may be required when exchanging sensors. Therefore errors in calibration are non-existent and operators will spend less time setting up control systems and recorders.

Small Size
Suitable for small molds or molds where water lines, support pillars, etc., inhibit the use of slide sensors.

Installation
The Button Sensor is usually installed under an ejector pin and the shielded lead wire is run to the outside of the mold for mounting. To accommodate the button sensor, a slot and counterbored hole is machined into the ejector plate. See installation information for details.

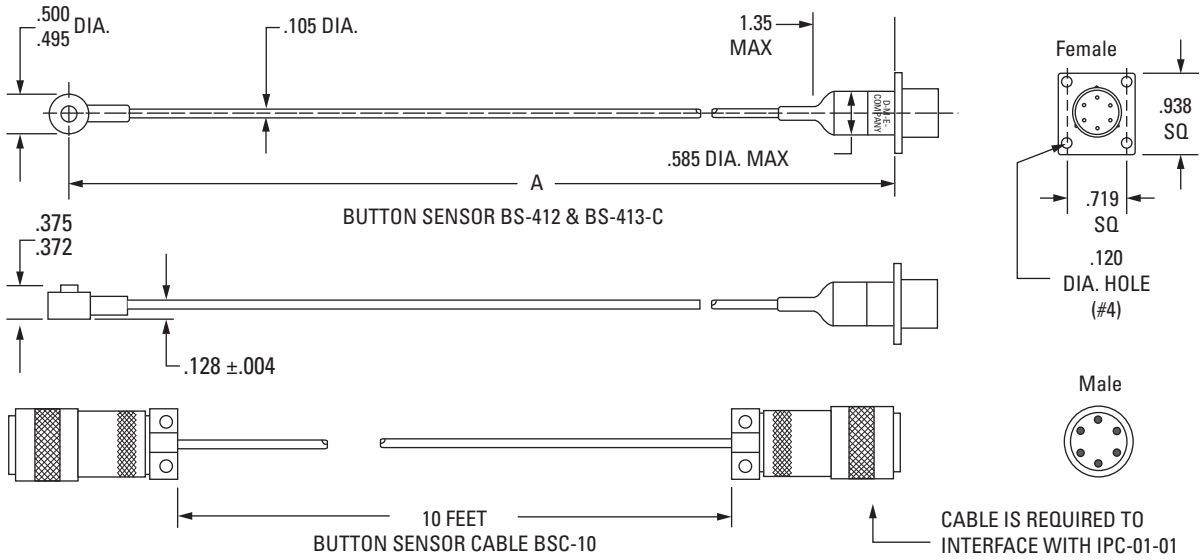

BUTTON MOLD PRESSURE SENSORS

Supplied with soldered on flush mount connector Amphenol PT02A10-6S (Mating connector Amphenol PT06A10-6P(SR) not supplied).

FORCE POUNDS	MEASURES PRESSURE ON PINS FROM:	A LENGTH				
		6" LEADS	12" LEADS	18" LEADS	24" LEADS	36" LEADS
125	1/32 Thru 3/32 (1 Thru 3mm) dia.	BS411C6	BS411C12	BS411C18	BS411C24	–
500	1/16 Thru 3/16 (2 Thru 6mm) dia.	–	BS412C12	–	BS412C24	BS412C36
2000	3/16 Thru 1/2 (6 Thru 16mm) dia.	–	BS413C12	–	BS413C24	BS413C36

BUTTON SENSOR EXTENSION CABLE*

ITEM NUMBER	LENGTH
BSC-10	10 FEET

*Mates with connector on button sensors above. Amphenol PT06A10-6P(SR) on each end. Use where required for monitoring and control equipment

Button Mold Pressure Sensors

INSTALLATION INFORMATION

FLUSH MOUNTED CONNECTOR

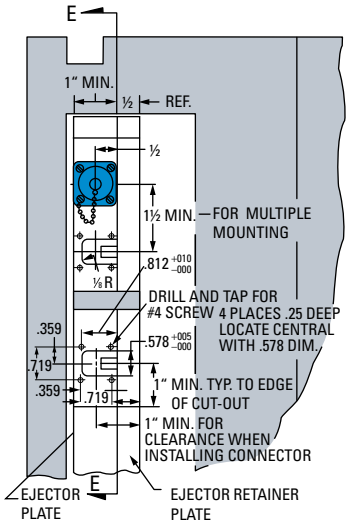

NOTE: When ejector plate is thicker than 1" connector may be centered on plate thickness. Altering mounting dimensions as required slot for lead wire should be depended as it approaches connector end as required.

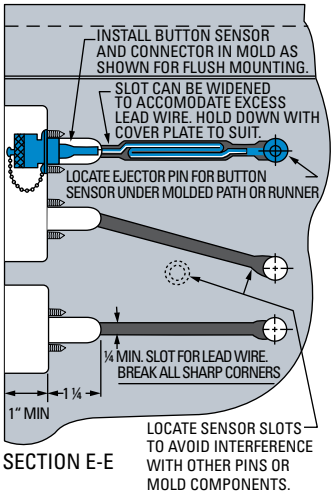

NOTE: When dummy pin installation is made. Altering mounting dimensions and location as required

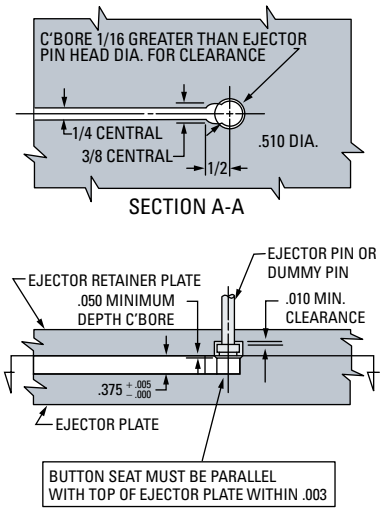

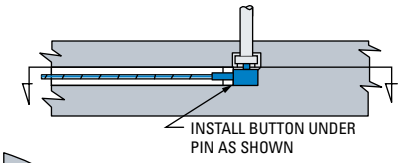

OUTSIDE BOX MOUNTED

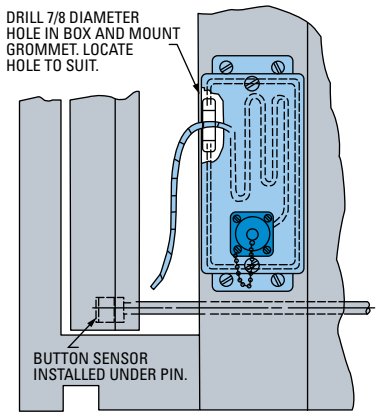

NOTE: When installing button sensor in mold pass button through hole in cover and Hole in box before incorporating into mold under pin excess wire may be left in box.

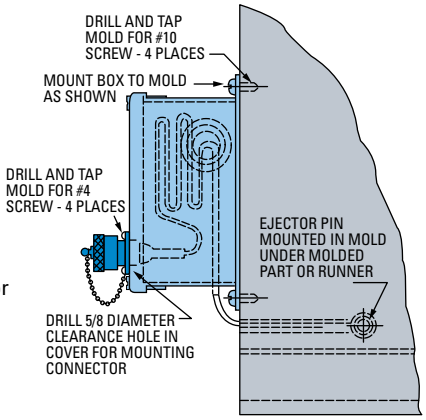

WIRING INFORMATION

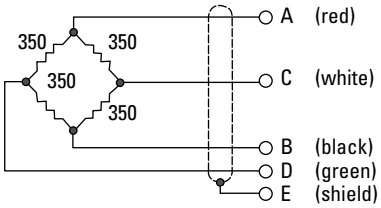

+	POWER	A	(red)
–	POWER	B	(black)
+	SIGNAL	C	(white)
–	SIGNAL	D	(green)
	GROUND	E	(shield)

WARNING:
DO NOT REMOVE CONNECTOR FROM SENSOR CABLE. CALIBRATION WILL BE ALTERED.

NOTE: MATING CONNECTOR IS AMPHENOL PT06A10-6P(SR).

SPECIFICATIONS

PRESSURE MEASUREMENT RANGE ..... 0 to 20,000 psi
(FOR RECOMMENDED PIN DIAMETERS)

FORCE RANGE	lb.	kg.
ITEM NO. BS-411C	125	60
ITEM NO. BS-412C	500	225
ITEM NO. BS-413C	2000	900

MAXIMUM LOAD ..... 150% FULL SCALE
TEMPERATURE RANGE ..... 0°F TO 450°F
TEMPERATURE COMPENSATION ..... 2% FULL SCALE
INPUT ..... 12V MAX.
OUTPUT ..... 2.0 mV/V FULL SCALE
ACCURACY ..... ¾% FULL SCALE
REPEATABILITY ..... 0.1% FULL RANGE OUTPUT
FULL RANGE DEFLECTION ..... LESS THAN .0008"
CIRCUIT ..... 4-ARM 350 OHM BRIDGE
CONNECTOR ..... AMPHENOL PT02A10-6S
MATES WITH AMPHENOL PT06A10-6P (SR)

Slide Mold Pressure Sensors

D-M-E Slide Mold Pressure Sensors are used for measuring pressures in conjunction with auxiliary recording and control equipment in injection and transfer molds. They provide a constant, full-scale output of 2 millivolts per volt. Because each sensor is electrically identical, the need for recalibration of control systems or recorders when a sensor is replaced is virtually eliminated. This means that errors in calibration are non-existent and operating personnel will now have an easier time setting up and operating control systems and recorders.

Constant Output

All sensors have the same output. This eliminates the need to recalibrate the readout system when sensors are exchanged.

Hermetically Sealed

Allows the sensor to be used at low temperatures where moisture is a problem.

Temperature Compensated

Special amplifiers are eliminated to compensate for temperature changes.

NIST TRACEABLE
SUPPLIED WITH CERTIFICATE OF CALIBRATION

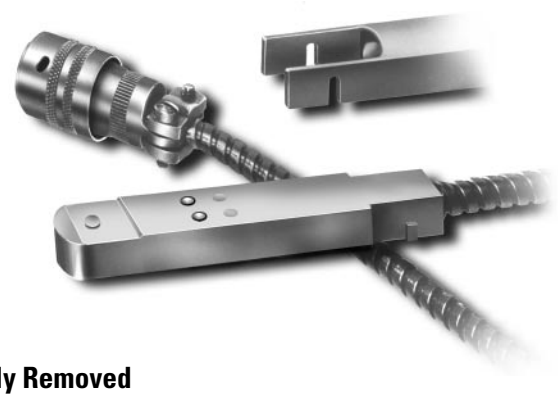

Easily Removed

Allows user to take sensor from one mold and place in another.

Two Models

Covers ejector pin sizes from 1/16" to 1/2" diameter, eliminating the need for stocking several different load ranges.

Installation

The sensing element is housed in a rectangular slide that plugs into a 3/8" deep by 1/2" wide slot, machined from the edge of the ejector plate to an ejector pin (slot machined in support plate when using a dummy pin). When fully inserted, the sensing element of the slide is under the head of the pin. See installation information for details.

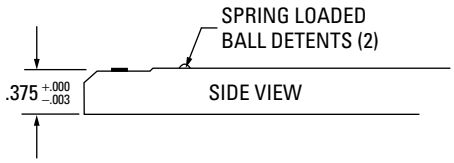

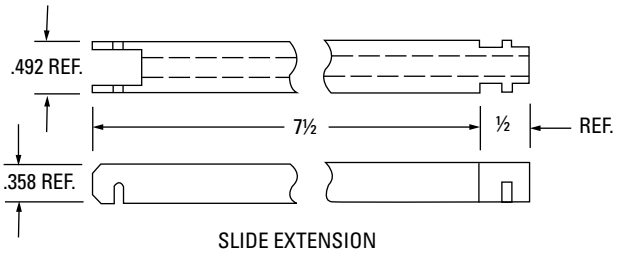

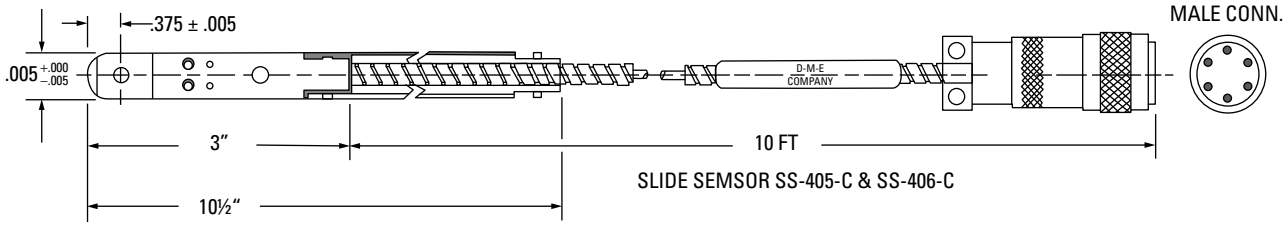

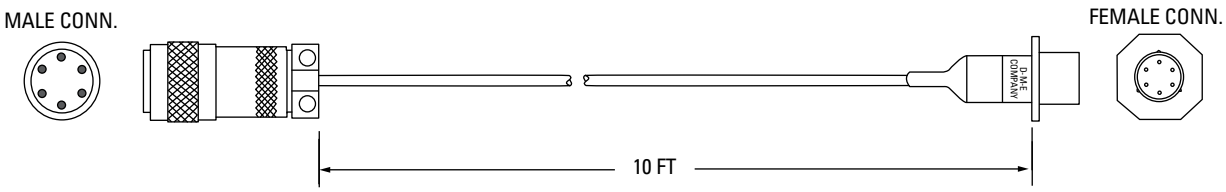

Slide Mold Pressure Sensors

INSTALLATION INFORMATION

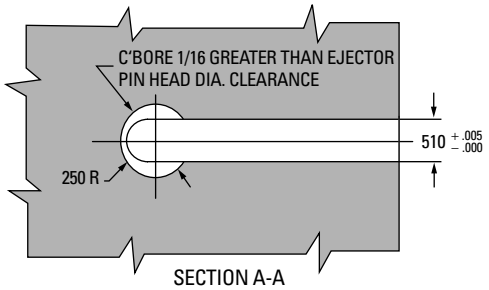

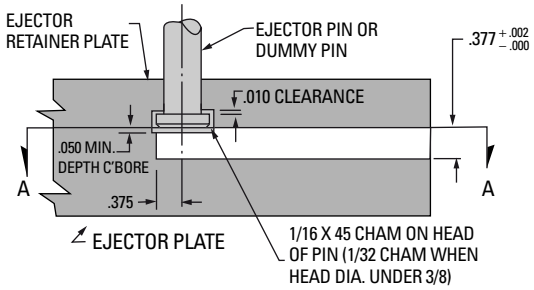

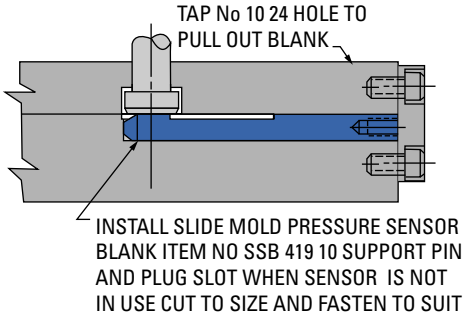

SLIDE MOLD PRESSURE SENSORS

ITEM NUMBER	MEASURES PRESSURES ON PINS FROM:
SS-405C	1/16 THRU 3/16 (2 THRU 6mm) Dia.
SS-406C	3/16 THRU 1/2 (6 THRU 16mm) Dia.

SIDE EXTENSION

ITEM NUMBER	LENGTH
SSE-418	7½"

SENSOR BLANK

ITEM NUMBER	LENGTH
SSB-419	12"

SLIDE SENSOR EXTENSION CABLE**

ITEM NUMBER	LENGTH
SSC-10	10 ft.

**Mates with connector on slide sensors above. Has Amphenol connector No. PT01A10-6S(SR) on one end and Amphenol connector No. PT06A10-6P(SR) on the other end. Use where required for monitoring and control equipment.

WIRING INFORMATION

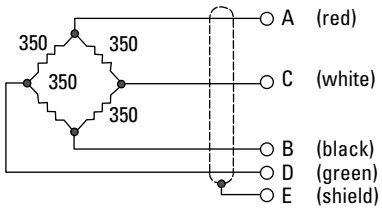

+ POWER	A	(red)
– POWER	B	(black)
+ SIGNAL	C	(white)
– SIGNAL	D	(green)
GROUND	E	(shield)

WARNING:
DO NOT REMOVE CONNECTOR FROM SENSOR CABLE. CALIBRATION WILL BE ALTERED.

SPECIFICATIONS

PRESSURE MEASUREMENT RANGE (FOR RECOMMENDED PIN DIAMETERS) ..... 0 to 20,000 psi

FORCE RANGE	lb.	kg.
ITEM NO. SS-405C	500	225
ITEM NO. SS-406C	2000	900

MAXIMUM LOAD ..... 150% FULL SCALE
TEMPERATURE RANGE ..... 0°F TO 450°F
TEMPERATURE COMPENSATION ..... 2% FULL SCALE/100°F
INPUT ..... 12V MAX.
OUTPUT ..... 2.0 mV/V FULL SCALE
ACCURACY ..... ¾% FULL SCALE
REPEATABILITY ..... 0.1% FULL RANGE OUTPUT
FULL RANGE DEFLECTION ..... LESS THAN .0008"
CIRCUIT ..... 4-ARM 350 OHM BRIDGE
CABLE LENGTH ..... 10 FEET
CONNECTOR ..... AMPHENOL PT06A10-6P(SR)
MATES WITH AMPHENOL PT01A10-6S(SR)

Using Process Controls and Monitoring to Achieve Optimal Molding Results

Ensuring part quality — everytime.

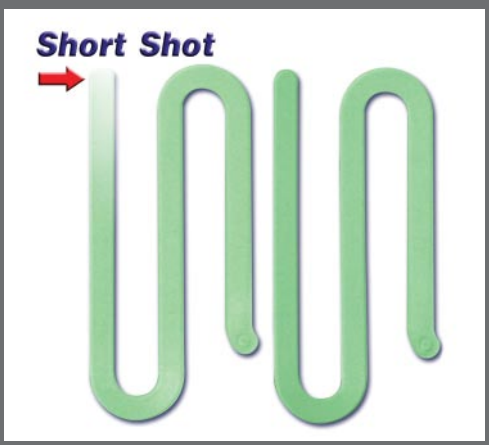

D-M-E button sensors, slide sensors and injection process controllers can be used for a number of applications. Assuming one is using newer injection molding machine technology with 3-stage control, managing the peak cavity pressure during pack (2nd stage) will guarantee consistent part quality. Peak cavity pressure determines how much plastic is injected into the part. Having consistent peak pressure during injection, shot after shot, guarantees that all parts in production are of the same size. This is referred to as process control.

Another application is that of process monitoring. By placing an ejector pin and a sensor at the last location in the part to fill, the sensor can be used to determine whether a short shot occurred. By determining the minimum pressure that defines a filled part, monitoring the process can determine whether a short shot has occurred. Many molders have used this method to scrap a suspected bad part because they would rather risk scrapping a good part than supplying a defective part to their customer. This is a fairly common practice for molders supplying certain industries, including automotive.

Many customers use D-M-E sensors in conjunction with plant-wide monitoring systems to automatically control conveyors. If a specific range of cavity pressure is not realized during ejection, the part is automatically scrapped. Again, this practice of scrapping a potentially good part rather than supplying a bad part to a customer ensures that part quality remains consistently good.

The D-M-E Injection Process Controller (IPC) can operate in a couple different ways. It can act as an amplifier to supply zero to one, zero to five, or zero to 10 volts DC. It can also output a four to 20 milliamp signal. If the molding machine has cavity pressure control but no strain gauge amplifier, the IPC can be used to fill the void. The IPC can also accept a relay contact closure indicating that injection forward is occurring. It can then use a pressure setpoint to trigger a relay contact to inform the molding machine that a specific cavity pressure has occurred. This action instructs the molding machine to go into a hold (3rd stage) state. Since there is a slight delay in triggering the machine, a slightly lower setpoint is used than the peak pressure.

The injection signal into the IPC also triggers a peak hold circuit so that peak cavity pressure is maintained on the display of the IPC until the end of injection.

For more information about setting up process control and monitoring applications, visit www.dme.net.

Valve Gate Controls

ENERGY EFFICIENT, RELIABLE
AND COMPACT HYDRAULIC
AND PNEUMATIC CONTROLS

4-Zone and 8-Zone Timer-Based Sequencers

- Solid-state timers and relays have a life rating of 10 million cycles
- Robust power supply
- User-friendly auto-reset function
- Individual test buttons for each zone provide precise time control to .01 second
- Compact design takes up minimal space
- Air-powered operation runs on 120 VAC and an air line
- Accumulator stores precharged oil, allowing for instantaneous operation

Hydraulic and pneumatic valve gate controls provide reliable, accurate and efficient control

Valve gate sequencers from D-M-E are available in pneumatic or hydraulic control for timer-based actuation of up to eight valve gates. Offering faster response than typical valve gate controllers and greatly reduced electrical use over the life of the unit, D-M-E Valve Gate Controls provide reliable, accurate, highly efficient time control for years of use.

Controllers feature highly accurate (resolution to 1/100 of a second) DIN-style solid state timers, individually fused against faults, to provide long life and high reliability. Each timer is capable of dual time functions, allowing each zone to be programmed with a delay-time and an on-time. Test functions for each zone assist in determining the correct hookup of each valve.

The controllers operate from a wide supply of operating voltages (88 to 264 volts AC), making them easy to relocate between different plants or even different countries. The standard product is offered with a 125 volt AC plug (North American Standard). This plug can be removed and replaced with any number of 240 VAC plugs.

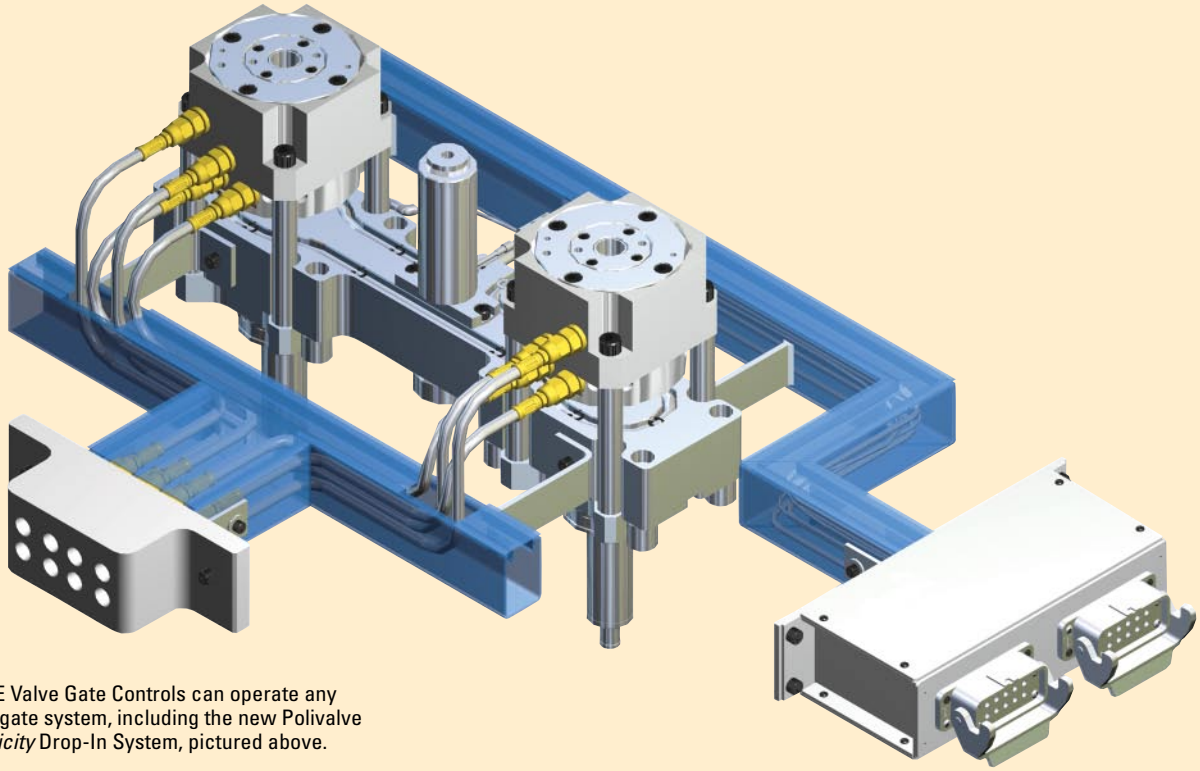

D-M-E Valve Gate Controls can operate any valve gate system, including the new Polivalve *Simplicity* Drop-In System, pictured above.

4-Zone and 8-Zone Timer-Based Sequencers

VCTH4000 and VCTH8000: 4-zone and 8-zone hydraulic control

The VCTH4000 provides four zones of hydraulic actuation and the VCTH8000 provides eight zones of actuation.

Hydraulic connections on the back of each controller allow for quick connect and disconnect of the hydraulic lines from the controller. This air-powered unit runs on 88 to 264 volts with a single air line. Because the VCTH pumps only when pressure build-up is required, operation is energy efficient, providing a low-cost energy solution. This style of pump also prevents degradation of hydraulic oil.

A hydraulic accumulator stores precharged oil, which provides on-demand flow for fast actuation of hydraulic cylinders. This powerful hydraulic system can provide up to 10 times the incoming air pressure.

ITEM NUMBER	DESCRIPTION
VCTH4000	4-ZONE HYDRAULIC CONTROLLER
VCTH8000	8-ZONE HYDRAULIC CONTROLLER
VCAH1500	15-FT. LONG HYDRAULIC HOSE ASSEMBLY

Note: Hydraulic hose assemblies and trigger signal cable included with each controller.

D-M-E Valve Gate controllers provide an extended life cycle, energy savings and more accurate time settings.

Compact 4-zone pneumatic or hydraulic control unit

The VCTB4000 Valve Gate Controller is designed to provide timer-based control of up to four 24 volt DC valves used to actuate pneumatic valve gate cylinders as well as some hydraulic valves, and features a user-friendly auto-reset feature. Its compact size makes it extremely portable and requires minimal space. A single DB-025 cable connects the controller to up to four remotely located valves, minimizing wiring and air connections.

ITEM NUMBER	DESCRIPTION
VCTB4000	4-ZONE PNEUMATIC HYDRAULIC CONTROLLER
VCPT0100	100-FT. LENGTH OF PNEUMATIC TUBING

Note: Trigger signal cable included with controller.

Highly accurate D-M-E solid state timers feature resolution to 1/100 of a second, far exceeding the industry standard of 1/10 of a second.

VCAP Air Valve Assemblies

VCAP multi-station air valve assemblies

The VCAP series offers 4-station (0400), 6-station (0600), 8-station (0800), 10-station (1000), and 12-station (1200) valve assemblies. The single-solenoid valves are spring returned and designed to run from 24 VDC +/- 10%. The air supply (maximum rated pressure 145 PSI) can be lubricated or non-lubricated — dry air is preferred but the valve is designed to tolerate some moisture.

Quick connects are provided on all air outputs to accept standard 1/4" tubing. The de-energized outputs, used for closing valve gates, feature check valves to ensure that unused valves do not leak air.

ITEM NUMBER	DESCRIPTION
VCAP0400	4-STATION AIR VALVE ASSEMBLY
VCAP0600	6-STATION AIR VALVE ASSEMBLY
VCAP0800	8-STATION AIR VALVE ASSEMBLY
VCAP1000	10-STATION AIR VALVE ASSEMBLY
VCAP1200	12-STATION AIR VALVE ASSEMBLY

Note: Each valve assembly includes a valve cable.

Technical Support

TECHNICAL SUPPORT: CURRENT LISTING OF ONLINE DOCUMENTS

Visit www.dme.net under D-M-E Americas "North America". Select "Download Documents" – Product Application Guides, Frequently Asked Questions, etc. for the most current listings.

Valve Gate Control Related

Valve Gate Controller User Manual

- VCTH-4000, 8000 Four-Zone and Eight-Zone Timer Based Hydraulic Valve Gate Controller User Manual
- Valve Gate Controller User Manual

Air Valve Assemblies User Manual

- Air Valve Assemblies User Manual

Pressure Control Related

- IPC-01-01 Pressure Control Unit User's Manual (625KB)
- Sensor Cables (54KB)
- Technical Literature for D-M-E Pressure Transducers - Revision 1.1 (16KB)
- A Short Tutorial on Cavity Pressure Transducers Usage 06-22-93 (25KB)

SMART SERIES® Temperature Control Related

Temperature Control Guides Replacement Parts

- Temperature Control Replacement Parts List (ED-0095-PL-001-H) (112KB)

Mainframes

- MFP1G, MFP1G1, MFPR2G, MFFPR2G & MFHP1G Mainframe User's Manual (427KB)
- MFP5G, MFP8G, & MFP12G Mainframe User's Manual (660KB)
- MFP5G, MFP8G, & MFP12G Mainframe User's Manual (Chinese Version) (3.15MB)
- MFHP2G, MFHP3G, & MFHP5G High Power Mainframe User's Manual (742KB)
- How to Calculate the Required KVA Size Needed for a D-M-E Single Phase Power Transformer (4KB)
- How to Calculate the Required KVA Size Needed for a D-M-E Three Phase Power Transformer (6KB)
- "G" Series Mainframe Replacement Parts
- Power and Thermocouple Cables

Temperature Controls

- SSM-15-11, SSM-15-12 & SSM-30-12 Temperature Control Module User's Manual (690KB)
- SSM-15-01, SSM-15-02 & SSM-30-02 Temperature Control Module User's Manual (447KB)
- SSM-15-01, SSM-15-02 & SSM-30-02 Temperature Control Module User's Manual (Chinese Version) (1.73MB)
- SSM-15-G & SSM-30-G SSMX-15-G & SSMX-30-G Temperature Control Module User's Manual (141KB)
- DSS-15-11, DSS-15-12 & DSS-30-12 Temperature Control Module User's Manual
- Old DSS-15-01, DSS-15-02 & DSS-30-02 Temperature Control Module User's Manual (222KB)
- DSS15G Temperature Control Module User's Manual (681KB)
- CSS-15-02 & CSS-30-02 Temperature Control Module User's Manual (242KB)
- CSS-15 & CSS-30 Temperature Control Module User's Manual (750KB)
- CIM-01-01 & CIM-01-02 Computer Interface Module User's Manual (114KB)
- CIM-10-G & CIM-10-GS Computer Interface Module User's Manual (743KB)
- SSH-10-01 & SSH-10-02 Temperature Control Unit User's Manual (522KB)
- SSH-10-21, SSH-10-22 & ESH-10-22 Temperature Control Unit User's Manual (427KB)
- SSH-10-11, SSH-10-12 & ESH-10-12 Temperature Control Unit User's Manual (427KB)
- TAS-05-02 Temperature Alarm & Stand-by Heat Module User's Manual (310KB)
- TAS-05-11, TAS-05-12 Temperature Alarm & System Control Module User's Manual (284KB)
- SMP/CMP Microprocessor Temperature Control Modules Technical Manual (obsolete product) (1.24MB)
- SMP/CMP Calibration Procedure
- Series 965 - 1/16 DIN Microprocessor-Based Auto-tuning Control User Manual (1.97MB)

Frequently Asked Questions - Temperature Controls

- Temperature Control Guides - Frequently asked questions
- Temperature Controls - Not Heating Up/SHI/Anti-Arc Clips Problems
- Selecting Connectors for a 2-Zone MFPR2G
- Selecting Connectors for a SSH Hookup Diagram

TECHNICAL SUPPORT: CURRENT LISTING OF ONLINE DOCUMENTS

Integrity™ Temperature Control Related

- INTEGRITY™ Control System User's Guide

TECHNICAL SUPPORT: MISCELLANEOUS

General Transformer Rules of Thumb (Typical 3 Phase, 3 Wire Delta Type Power Connection)

- Heavy Duty Main Frame Stands required with Transformer Kits above 15 KVA.
  (1 KVA transformer rating = 1000 Watts of Resistance Heater Loads)
- Typical Modules Requirements
  - 15 amp 240 VAC modules rated at 3600 Watts Maximum
  - 10 amp 240 VAC modules rated at 2400 Watts Maximum
  - 5 amp 240 VAC modules rated at 1200 Watts Maximum
- Effects of Line Voltage Supply
  - If resistive heater is rated 1,000 Watts at 240 Vac, its Effective Wattage will be:
    - 750 Watts at 208 VAC drawing 3.6 amps
    - 840 Watts at 220 VAC drawing 3.82 amps
    - 1,000 Watts at 240 VAC drawing 4.17 amps
    - 1,210 Watts at 264 VAC drawing 4.58 amps
- each 100 amp breaker uses 45 KVA minimum for full available power to frame
  (can supply 15 KVA or 15,000 Watts per phase, zones balanced on the 3 phases.)
  - 45 KVA / 12 zones = 3,750 Watts available per zone
  - 45 KVA / 24 zones = 1,875 Watts Average available per zone
  - 45 KVA / 48 zones = 937.5 Watts Average available per zone
- each 70 amp 3 phase breaker uses 30 KVA minimum for full available power to frame
  (can supply 10 KVA or 10,000 Watts per phase, zones balanced on the 3 phases.)
  - 30 KVA /12 zones = 2,500 Watts Average available per zone
  - 30 KVA /24 zones = 1,250 Watts Average available per zone
  - 30 KVA/48 zones = 625 Watts Average available per zone
- each 50 amp 3 phase breaker uses 22.5 KVA min. for full available power to frame
  (can supply 7.5 KVA or 7,500 Watts per phase, zones balanced on the 3 phases.)
  - 22.5 KVA /12 zones = 1875 Watts Average available per zone
  - 22.5 KVA /24 zones = 916 Watts Average available per zone
  - 22.5 KVA/48 zones = 468 Watts Average available per zone

Returning Items to D-M-E U.S. for

- Repairs

  You can send temperature control repairs and modules needing calibration to:

  D-M-E Repairs
  1419 State Route 45 South
  Austinburg, Ohio 44010

  Please enclose contact information and a description of what problems you have been experiencing with the product. Module repairs are a fixed price. Cable and main frame repairs depend on what needs to be serviced. Warranty service is also covered via this method, however, module fuses and triacs are not covered.
- Return for Credit

  Call D-M-E USA at 1-800-626-6653 or D-M-E Canada at 1-800-387-6600 toll free

D-M-E U.S. Custom Quote Procedures

- Cables
- Special Mainframe Requirements
- Contact Thom Linehan at 248-544-5027 or email at thom_linehan@dme.net

D-M-E: Your Complete Mold Technologies Provider

Every step of the way

Check Out All of the D-M-E Mold Technology Catalogs And You'll See Why We're an Essential Resource to Thousands of Customers Worldwide!

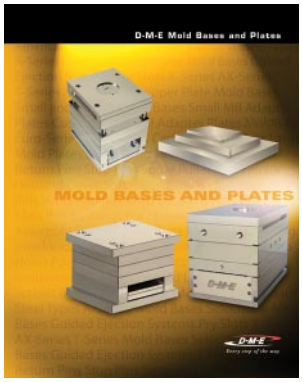

CATALOG: 308 PAGES

D-M-E Mold Bases & Plates

Choose from the world's widest selection of mold bases from uniquely featured, off-the-shelf solutions to full-featured, custom-configured offerings. An array of standard and specially machined mold plate sizes gives you unlimited options.

CATALOG: 156 PAGES

MUD Quick-Change Systems From D-M-E

Reduce downtime by as much as 75 percent with an innovative approach to fast production changeovers. Master Unit Die is the leader in quick-change systems and the MUD Catalog offers many systems that will maximize your production volume.

CATALOG: 316 PAGES

D-M-E Mold Components

With the largest selection of mold components available around the globe, the D-M-E Mold Components Catalog has the products that will help you meet the unprecedented demands you face for speed, cost reduction and performance.

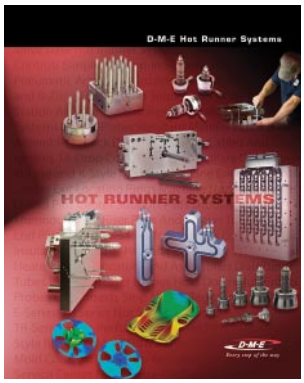

CATALOG: 174 PAGES

D-M-E Hot Runner Systems

Moldmakers, molders and mold designers worldwide look to the D-M-E Hot Runner Systems Catalog for essential hot runner solutions. From best-in-class components to complete, fully-functioning hot half systems, D-M-E has the broadest range of hot runner products and services.

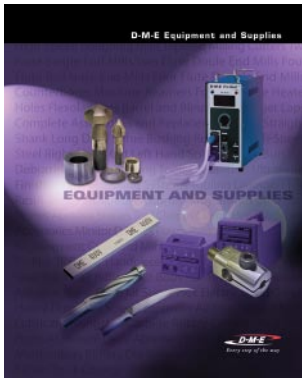

CATALOG: 76 PAGES

D-M-E Equipment and Supplies

From high-speed cutting tools and finishing and polishing systems to a vast array of maintenance, repair and operation-related products, the D-M-E Equipment and Supplies Catalog is an invaluable resource for mold technology professionals.

CATALOG: 68 PAGES

D-M-E Technical Services

From powerful, online resources available 24/7, to our team of trained, experienced experts committed to helping customers achieve maximum productivity, reliable operation, and better performance, D-M-E's goal is simple: to be an essential resource for your molding challenges every step of the way.

D-M-E, an essential resource to the customers it serves worldwide, offers the industry's broadest range of market-leading products, unsurpassed knowledge and expertise, a global logistics infrastructure that ensures speed and accuracy, and a support organization unrivaled for its ability to assist customers when and where they need it. A complete line of hot runner systems, control systems, mold bases, MUD quick-change mold systems, mold components, moldmaking and molding equipment supplies, and technical services helps customers compete every step of the way.

D-M-E
Every step of the way

World Headquarters
D-M-E Company
29111 Stephenson Highway
Madison Heights, MI 48071
800-626-6653 *toll-free tel*
248-398-6000 *tel*
888-808-4363 *toll-free fax*
www.dme.net *web*
info@dme.net *e-mail*

D-M-E of Canada, Ltd.
6210 Northwest Drive
Mississauga, Ontario
Canada L4V 1J6
800-387-6600 *toll-free tel*
905-677-6370 *tel*
800-461-9965 *toll-free fax*
dme_canada@dme.net *e-mail*

D-M-E Europe C.V.B.A.
Industriepark Noord
B-2800 Mechelen Belgium
32-15-215011 *tel*
32-15-218235 *fax*
sales@dmeeu.com *e-mail*

a Milacron Company

Printed in U.S.A.