90° BSP Elbows

Mat.: Brass

200 / 300 / 500 - 90°

REF	R	Rp	W	Z
200 - 90 / BSP	1/8" BSPT	1/8" BSP	13	13
300 - 90 / BSP	1/4" BSPT	1/4" BSP	18	18
500 - 90 / BSP	1/2" BSPT	1/2" BSPT	26	27

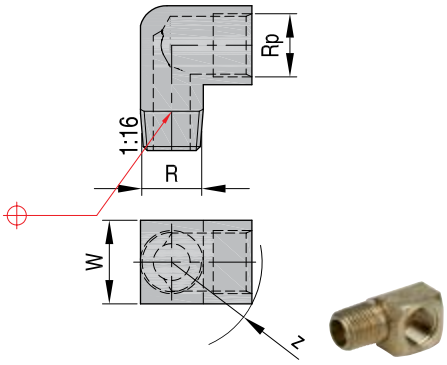

45° BSP Elbows

Mat.: Brass

200 / 300 / 500 - 45°

REF	R	Rp	W	Z
200 - 45 / BSP	1/8" BSPT	1/8" BSP	13	13
300 - 45 / BSP	1/4" BSPT	1/4" BSP	18	18
500 - 45 / BSP	1/2" BSPT	1/2" BSPT	24	23

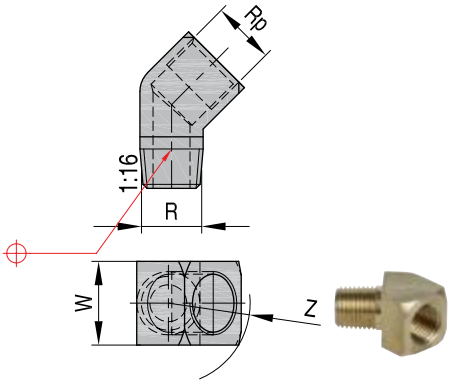

Double nipples

Mat.: Brass

FDN

REF	Rp	Rp1	L	l1	l2	d	SW
FDN-3814	3/8" BSP	1/4" BSP	27	11	11	6,5	19
FDN-3812	1/2" BSP	3/8" BSP	30	12	9	12	22
FDN-1212	1/2" BSP	1/2" BSP	33	12	12	14	22

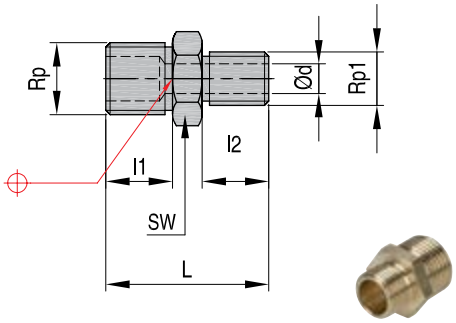

Double nipples

Mat.: Brass

ST16

REF	Rp	d2	L	L1	L2	SW
ST16 M14x1,5	M14x1,5	6	23	9	9	17
ST16 R1/4"	1/4" BSP	6	23	9	9	17
ST16 M16x1,5	M16x1,5	9	23	9	9	19
ST16 R3/8"	3/8" BSP	9	23	9	9	19
ST16 M24x1,5	M24x1,5	13	40	16	16	27
ST16 R1/2"	1/2" BSP	13	30	12	12	22
ST16 R3/4"	3/4" BSP	13	40	16	16	27

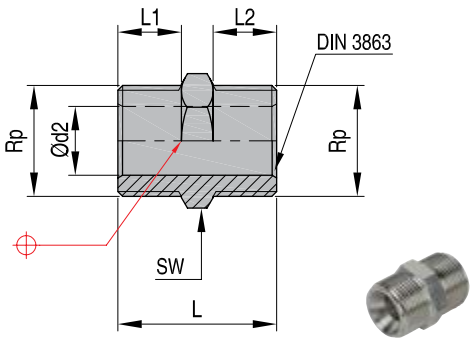

CAD reference point

ST17

Reducing nipples

Mat.: Brass

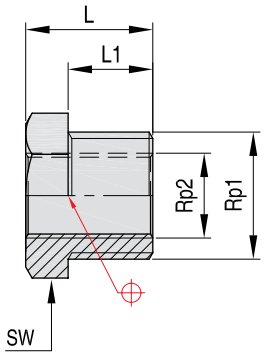

REF	Rp1	Rp2	L	L1	SW
ST17 M14x1,5 - M10x1	M14x1,5	M10x1	11	7	17
ST17 M18x1,5 - M14x1,5	M18x1,5	M14x1,5	14	9	22
ST17 R1/4" - R1/8"	1/4" BSP	1/8" BSP	11	7	17
ST17 R3/8" - R1/4"	3/8" BSP	1/4" BSP	13	9	19
ST17 R1/2" - R3/8"	1/2" BSP	3/8" BSP	18	12	24
ST17 M24x1,5 - M16x1,5	M24x1,5	M16x1,5	24	16	27

AN

Pressure plugs

Mat.: Brass

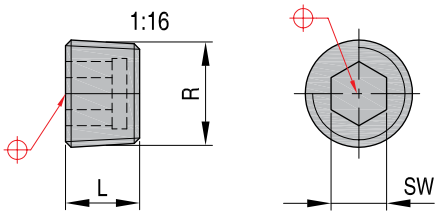

REF	R	L	SW
AN - 8	1/8" BSPT	8	5
AN - 4	1/4" BSPT	10	7
AN - 3	3/8" BSPT	10	8
AN - 10	M10 x 1	8	5
AN - 2	1/2" BSPT	10	10

V

Knurled Pressure plugs

Mat.: Brass

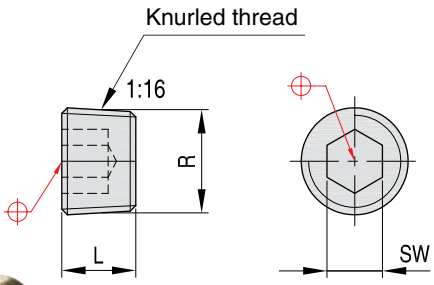

REF	R	L	SW
V 360 M8x0,75	M8x0,75	8	4
V 361 M10x1	M10x1	8	5
V 362 R1/8"	1/8" BSPT	8	5
V 363 R1/4"	1/4" BSPT	10	7
V 364 R3/8"	3/8" BSPT	10	8
V 365 M12x1,5	M12x1,5	8	6
V 366 M14x1,5	M14x1,5	10	7
V 367 R1/2"	1/2" BSPT	10	10

ST155

Extension pipes

Mat.: Brass

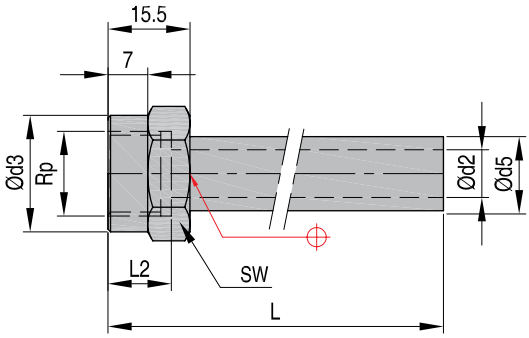

REF	Rp	L	L1	d2	d3	d5	L2	SW
ST155-120-M14x1,5	M14x1,5	120	7	6	16	10	12	17
ST155-240-M14x1,5	M14x1,5	240	7	6	16	10	12	17
ST155-150-M16x1,5	M16x1,5	150	7	9	21	14	12	22
ST155-300-M16x1,5	M16x1,5	300	7	9	21	14	12	22

CAD reference point

Hose nipples — Mat.: Brass — GW-Z

REF	Rp	d1	d2	SW
GW 299 Z M8 x 0,75	M8 x 0,75	9,5	4,5	12
GW 300 Z M10 x 1	M10 x 1	12,0	6,0	12
GW 302 Z R1/8"	1/8" BSP	7,0	3,5	12
GW 305 Z R1/8"	1/8" BSP	12,0	6,0	12
GW 307 Z R1/4"	1/4" BSP	7,0	3,5	14
GW 310 Z R1/4"	1/4" BSP	14,0	9,0	14
GW 315 Z M10	M10	12,0	6,0	12
GW 320 Z M12 x 1,5	M12x1,5	11,8	8,0	12

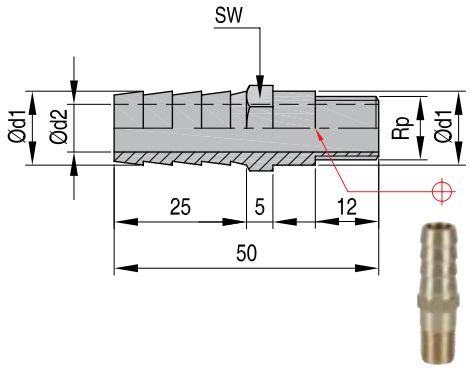

Hose nipples — Mat.: Brass — GW-K

REF	R	d1	d2	SW
GW 301K M10x1	M10x1	12	6	12
GW 306 K R1/8"	1/8" BSPT	12	6	12
GW 311 K R1/4"	1/4" BSPT	14	9	14

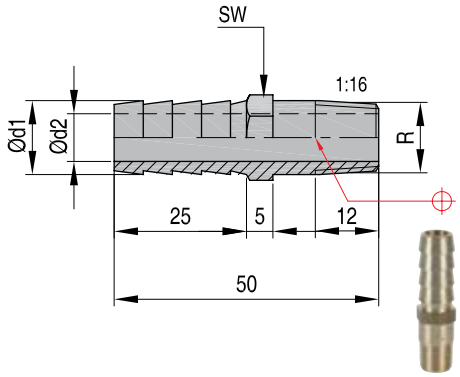

Hose nipples — Mat.: Brass — GW

REF	Rp	d1	d2	L	l1	SW
GW 330 R3/8"	3/8" BSP	14	10	44	10	19
GW 340 R1/2"	1/2" BSP	14	10	46	12	22

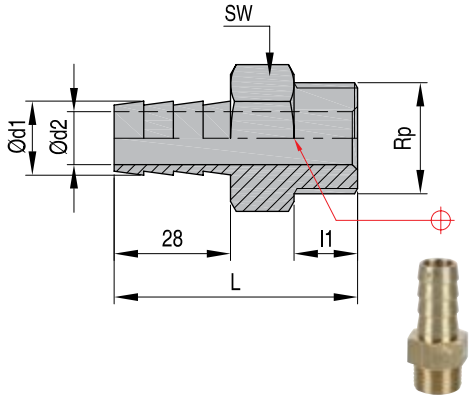

Hose nipples — Mat.: Brass — SST

REF	R	d1	d	L	SW
SST-12-1/8K	1/8" BSPT	6	12	50	12
SST-12-1K	M10 x 1	6	12	50	12
SST-14-1/4K	1/4" BSPT	9	14	54	14

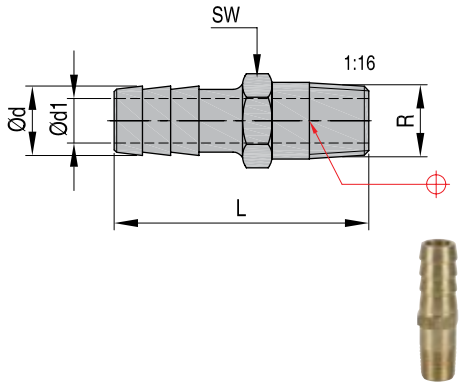

CAD reference point

GW

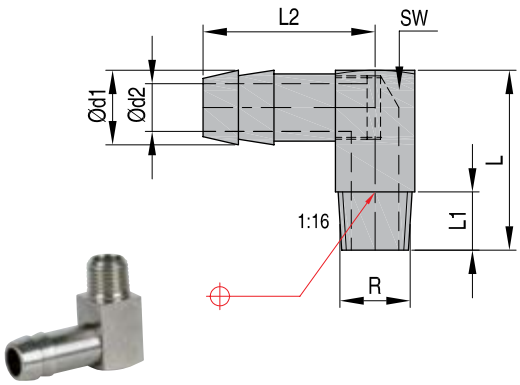

Angle Hose nipples

Mat.: Brass

REF	R	d1	d2	L	L1	L2	SW
GW 500 M10x1	M10x1	9	6,0	27	9	23,5	11
GW 510 R1/8"	1/8" BSPT	9	6,0	27	9	23,5	11
GW 520 M8x0,75	M8x0,75	9	4,5	27	9	23,5	11
GW 530 M14x1,5	M14x1,5	13	9,0	34	9	32,5	15
GW 540 R1/4"	1/4" BSPT	13	9,0	34	9	32,5	15

BSS

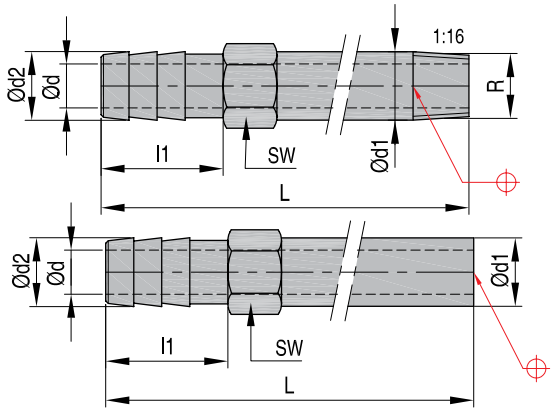

Brass extension pipes

Mat.: Brass

REF	R	L	l1	d	d1	d2	SW
BSS-1810	1/8" BSPT	100	17	6	10	10	11
BSS-1815	NO THREAD	150	17	6	10	10	11
BSS-1825	NO THREAD	250	17	6	10	10	11
BSS-1415	1/4" BSPT	150	25	9	14	14	15
BSS-1425	NO THREAD	250	25	9	14	14	15

ET

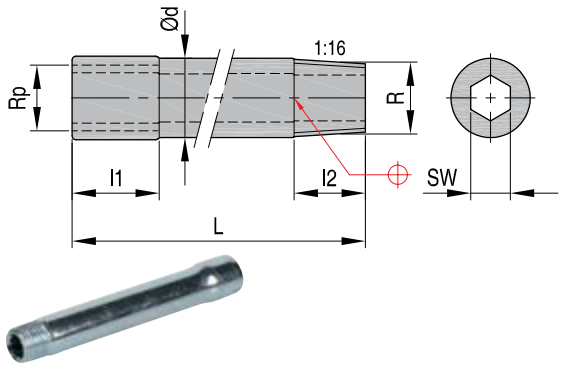

Extension Pipe Hex Key

Mat.: Zinc plated steel

REF	R	Rp	L	d	l1	l2	SW
ET 18050	1/8" BSPT	1/8" BSP	50	10	11	9	5
ET 18100	1/8" BSPT	1/8" BSP	100	10	11	9	5
ET 18150	1/8" BSPT	1/8" BSP	150	10	11	9	5
ET 14050	1/4" BSPT	1/4" BSP	50	14	12	10	8
ET 14100	1/4" BSPT	1/4" BSP	100	14	12	10	8
ET 14150	1/4" BSPT	1/4" BSP	150	14	12	10	8

VL

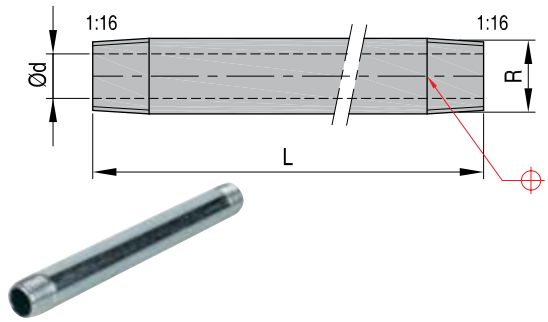

Extension pipes

Mat.: Zinc plated steel

REF	R	d	L
VL 1/8" x 50	1/8" BSPT	6	50
VL 1/8" x 100	1/8" BSPT	6	100
VL 1/8" x 150	1/8" BSPT	6	150
VL 1/8" x 200	1/8" BSPT	6	200
VL 1/4" x 50	1/4" BSPT	9	50
VL 1/4" x 100	1/4" BSPT	9	100
VL 1/4" x 150	1/4" BSPT	9	150
VL 1/4" x 200	1/4" BSPT	9	200
VL 3/8" x 100	3/8" BSPT	12	100
VL 3/8" x 150	3/8" BSPT	12	150
VL 3/8" x 200	3/8" BSPT	12	200
VL 1/2" x 100	1/2" BSPT	16	100
VL 1/2" x 150	1/2" BSPT	16	150
VL 1/2" x 200	1/2" BSPT	16	200

CAD reference point

Hose nipples

Mat.: Brass

GW

REF	Rp	d1	d2	L	T	SW
GW 350 R3/8"	3/8" BSP	14	10	43	9	19
GW 360 R1/2"	1/2" BSP	14	10	45	11	24

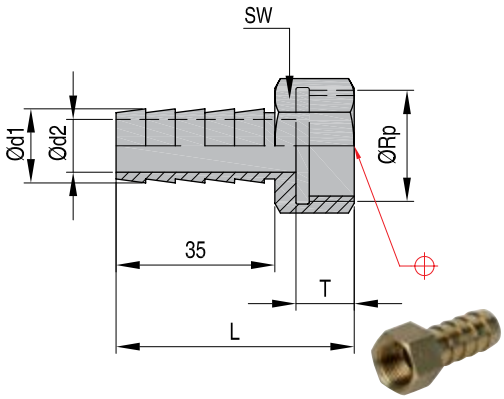

Hoses

Mat.: Nylon reinforced

GS 1090

REF L	d1	d2	Pmax.20°C	Pmax.40°C	Pmax.60°C	R*	L
GS 1090 6 T	6	12	22bar	16bar	8bar	R min=36 mm	25
GS 1090 8 T	8	13	20bar	14bar	7bar	R min=54 mm	50
GS 1090 9 B	10	15	20bar	14bar	7bar	R min=74 mm	25
GS 1090 9 R	10	15	20bar	14bar	7bar	R min=74 mm	25
GS 1090 13 B	12,5	18	18bar	12bar	6bar	R min=90 mm	25
GS 1090 13 R	12,5	18	18bar	12bar	6bar	R min=90 mm	25

R* = bending radius

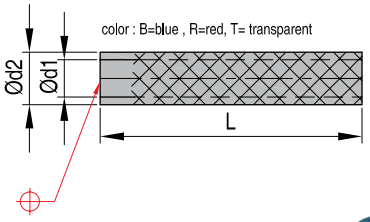

Hoses *(not for vacuum)*

Mat.: Viton

VM 200

REF	d1	d2	Pmax.	T (°C)	R*
VM 200 9	9	13,5	20bar	200	R min=50 mm
VM 200 13	13	18,0	20bar	200	R min=60 mm

R* = bending radius
Not suited for use with oil!

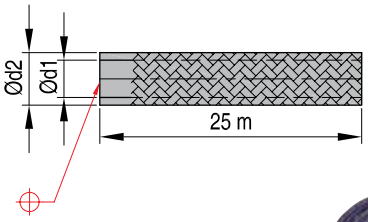

"Push-to-Lock" Hoses

Mat.: Mixture of synthetic elastomers, black smooth

PTLH

REF	d1	d2	Pmax.	T (°C)	Info	R*
PTLH 10 R	3/8"	16	20bar	-35->85	20m roll	R min=70 mm
PTLH 10 B	3/8"	16	20bar	-35->85	20m roll	R min=70 mm
PTLH 13 R	1/2"	19	20bar	-35->85	20m roll	R min=84 mm
PTLH 13 B	1/2"	19	20bar	-35->85	20m roll	R min=84 mm

R* = bending radius

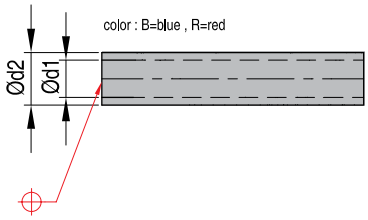

CAD reference point

US 1600

Hose clamps — Mat.: St (CrNi)

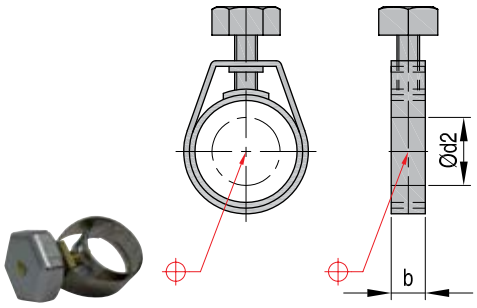

REF	d2	b
US 1600 1	7-12	10
US 1600 2	9-14	11
US 1600 3	10-15	11
US 1600 4	12-17	11
US 1600 5	14-19	11
US 1600 6	16-21	11
US 1600 7	17-22	11
US 1600 8	20-25	11

US 1650

Hose clamps — Mat.: St (CrNi)

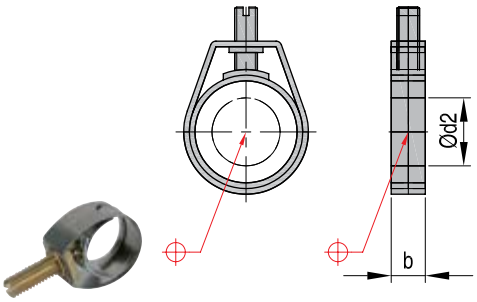

REF	d2	b
US 1650 1	7-12	10
US 1650 2	9-14	11
US 1650 3	10-15	11
US 1650 4	12-17	11
US 1650 5	14-19	11
US 1650 6	16-21	11
US 1650 7	17-22	11
US 1650 8	20-25	11

US 1700

Hose clamps — Mat.: St DIN 3017

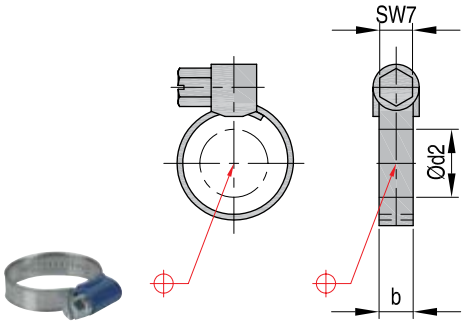

REF	d2	b
US 1700 1	8-12	9
US 1700 2	10-16	9
US 1700 3	12-20	9
US 1700 4	16-25	9
US 1700 5	20-32	9

CAD reference point

Press-fit assembly sleeves

MH 1

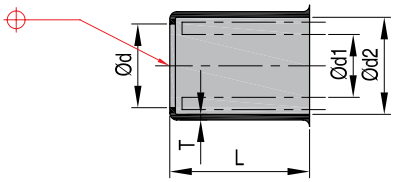

REF	d1	d2	d	L	T
MH 1 - 9 - 15,5	9	15,5	12	20	0,8
MH 1 - 13 - 19	13	19,0	14	26	0,9
MH 1 - 13 - 23	13	23,0	17	32	0,9

2-piece hose nipple for MH1

Mat.: Brass

ST 19

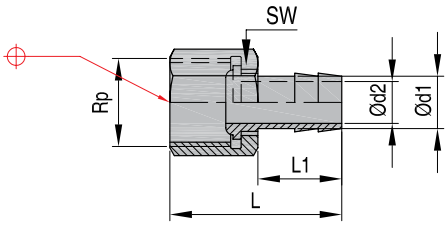

REF	Rp	d1	d2	L	L1	SW
ST 19 - 9 - M14x1,5	M14x1,5	9	6	34,5	19	17
ST 19 - 9 - R1/4"	1/4" BSP	9	6	34,5	19	17
ST 19 - 13 - M16x1,5	M16x1,5	13	9	41,0	27	22
ST 19 - 13 - R3/8"	3/8" BSP	13	9	41,0	27	22

Hose assembly tool

SM 1

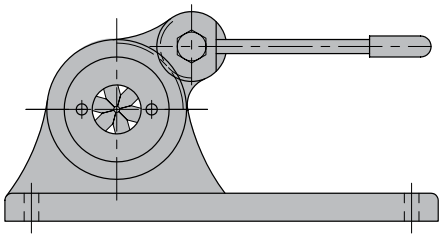

REF
SM 1

CAD reference point

WV

Threadless turn off Pressure plugs — Mat.: Brass, O-ring: Viton

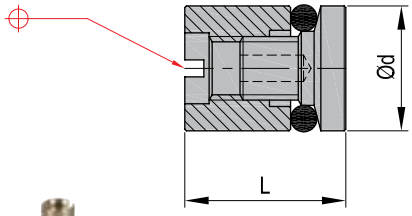

REF	L	d	BORE HOLE d H13	Installation Key
WV 006	15	6	6	WV106 / WV306
WV 007	15	7	7	WV107 / WV307
WV 008	15	8	8	WV108 / WV308
WV 010	15	10	10	WV110 / WV310
WV 012	15	12	12	WV112 / WV312

WV

Installation key, plug extractor incl. — Mat.:Tool steel

REF	for plug d	L
WV106	6	150
WV107	7	150
WV108	8	150
WV110	10	150
WV112	12	150
WV306	6	300
WV307	7	300
WV308	8	300
WV310	10	300
WV312	12	300

KN 105

Threadless Pressure plugs — Mat.: Brass, O-ring: Viton

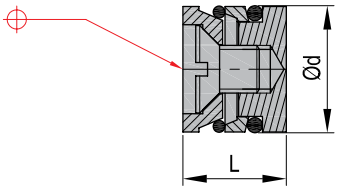

REF	L	d	BORE HOLE d H13	Pmax	T (°C)
KN 105 6	10	6	6	10	200
KN 105 7	10	7	7	10	200
KN 105 8	11	8	8	10	200
KN 105 10	11	10	10	10	200
KN 105 12	11	12	12	10	200
KN 105 14	13	14	14	10	200
KN 105 16	13	16	16	10	200

Installation Instructions KN-WV-AN-V

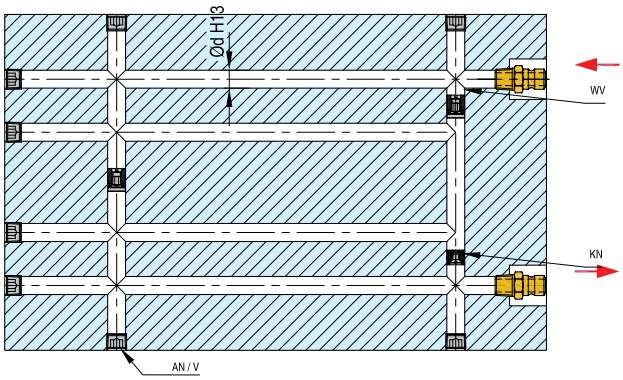

CAD reference point

Baffle ribs

T Max.: 200°C

WV 700

REF	d	La	L	l	l1	l2	l3	S	R	o-ring	d1 H13	Installation Key
WV 700 6 200	6	-	208	200	6,0	3,5	2,0	1,0	2,4	2x	4	WV106 / WV306
WV 700 6 320	6	320	313	305	6,0	3,5	2,0	1,0	2,4	2x	4	WV106 / WV306
WV 700 8 200	8	-	210	200	6,0	3,5	2,0	1,0	3,4	2x	5	WV108 / WV308
WV 700 8 320	8	320	315	305	6,0	4,5	4,0	1,0	3,4	2x	5	WV108 / WV308
WV 700 10 200	10	-	209	200	7,0	5,0	3,0	1,5	3,5	1x	6	WV110 / WV310
WV 700 10 320	10	320	315	305	7,0	5,0	3,0	1,5	3,5	1x	6	WV110 / WV310
WV 700 12 200	12	-	212	200	9,0	6,0	3,0	1,5	4,5	1x	8	WV112 / WV312
WV 700 12 320	12	320	316	305	9,0	6,0	3,0	1,5	4,5	1x	8	WV112 / WV312
WV 700 14 200	14	-	213	200	10,5	7,5	2,5	1,5	5,5	1x	10	WV112 / WV312
WV 700 14 320	14	320	318	305	10,5	7,5	2,5	1,5	5,5	1x	10	WV112 / WV312

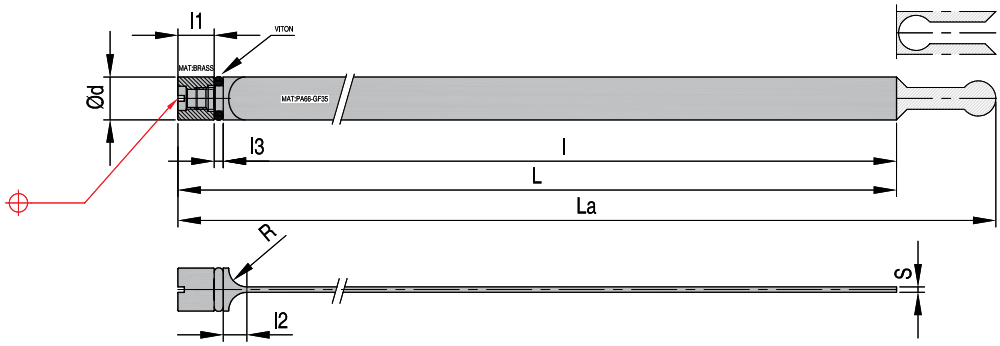

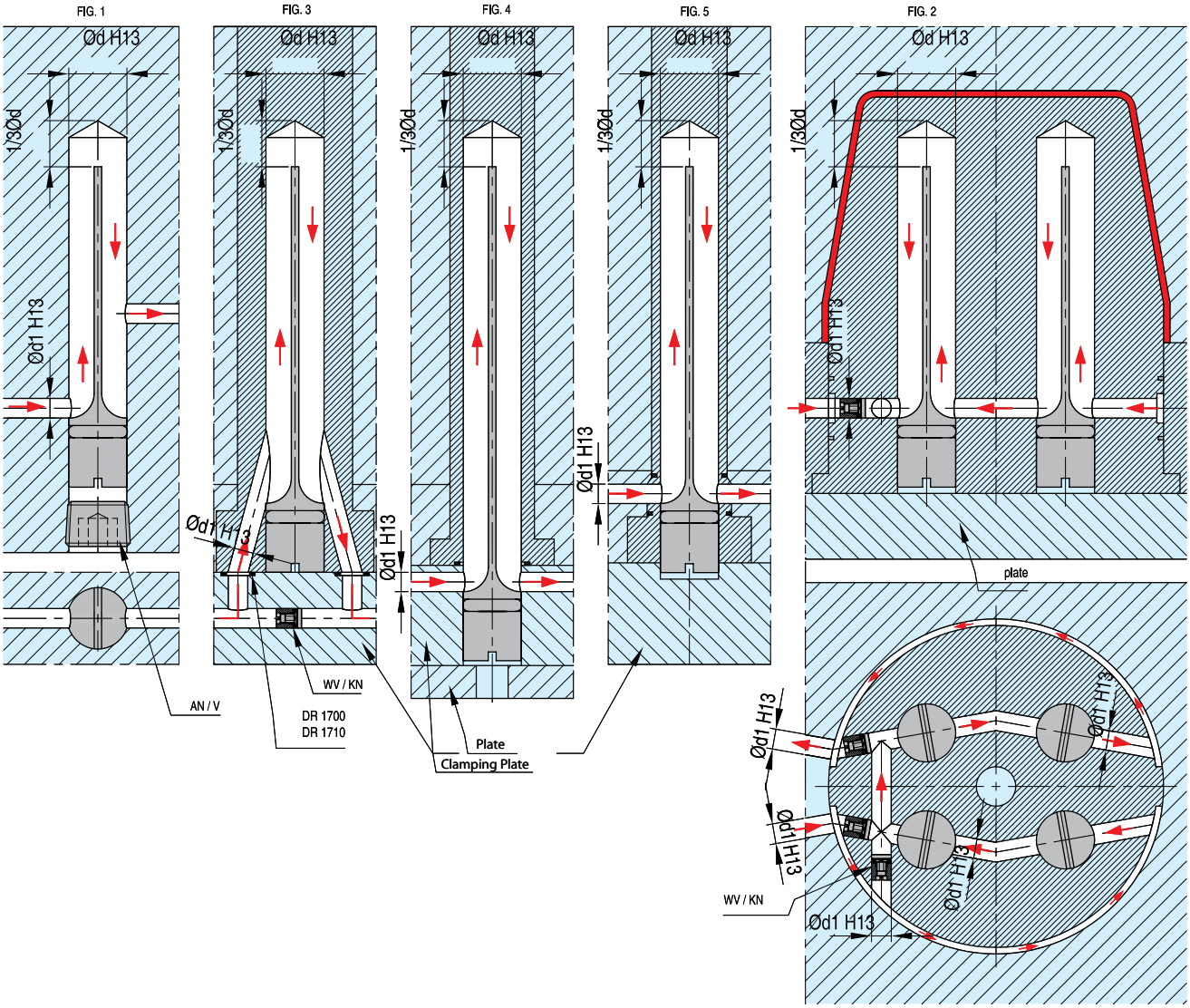

CAD reference point

BBP - BBJ

Plastic baffle ribs

Mat.: High temperature resistant plastic

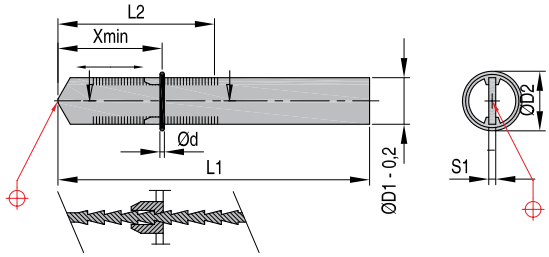

REF	D1	D2	L1	L2	X min.	S1	S2	d	REF. O-RINGE (VITON 200°C)
BBP 0001	10	17	220	55	12	1,5	2,0	2,4	BBJ 0001
BBP 0002	15	22	300	70	16	1,8	2,0	2,4	BBJ 0002
BBP 0003	20	28	350	90	20	2,0	2,4	2,9	BBJ 0003
BBP 0004	25	33	380	115	24	2,2	2,4	2,9	BBJ 0004

BBP - BBJ

Plastic baffle ribs

Mat.: High temperature resistant plastic

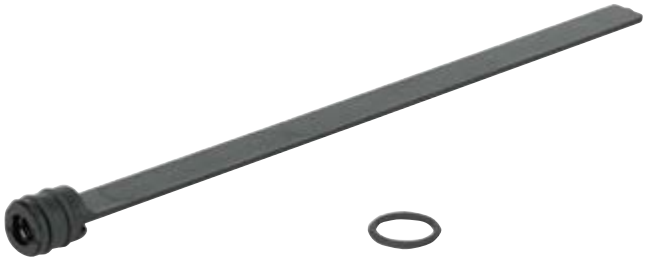

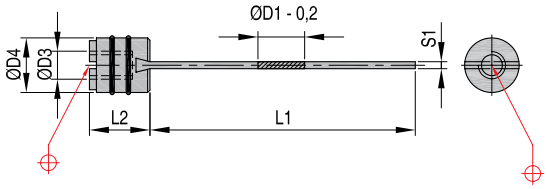

REF	D1	D2	D3	D4	L1	L2	S1	REF. O-RINGE (VITON 200°C)
BBP 0101	10	12	M6	11,7	180	13	1,5	BBJ0101
BBP 0102	15	16	M8	15,7	250	16	1,8	BBJ0102
BBP 0103	20	22	M12	21,7	300	20	2,0	BBJ0103
BBP 0104	25	26	M16	25,7	390	22	2,2	BBJ0104

CAD reference point

Installation Instructions BBP

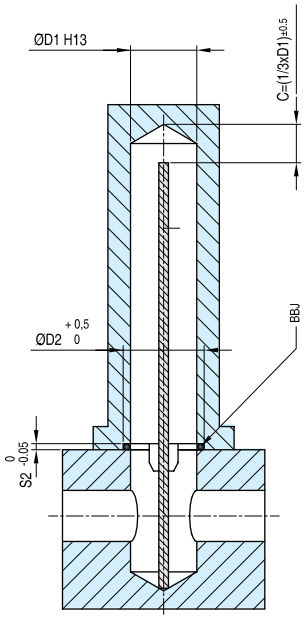

Installation Instructions BBP

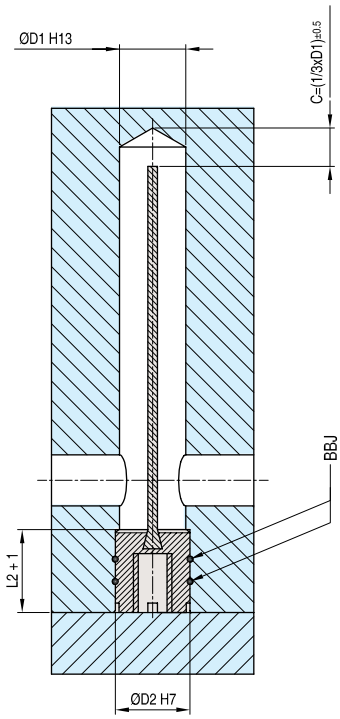

MILACRON®

BB

Brass plug baffles Mat.: Brass

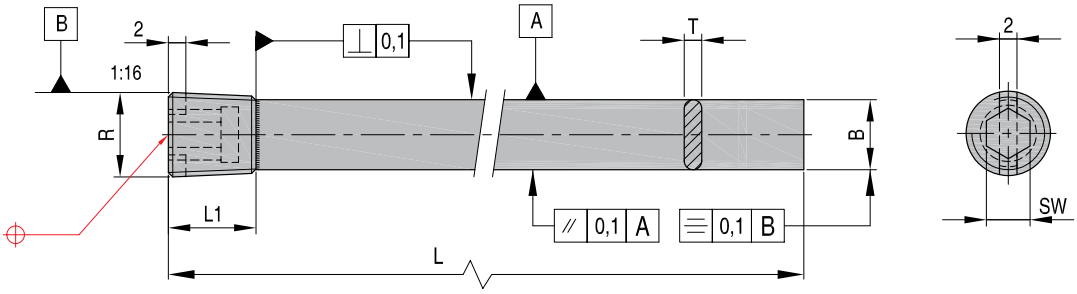

REF	R	B	L	L1	T	d	SW
BB-100-1/8	1/8" BSPT	8,2	104	8	1,6	8,5	5
BB-200-1/8	1/8" BSPT	8,2	204	8	1,6	8,5	5
BB-125-1/4	1/4" BSPT	11,2	131	10	2,4	11,5	7
BB-250-1/4	1/4" BSPT	11,2	258	10	2,4	11,5	7
BB-150-3/8	3/8" BSPT	14,7	156	10	2,4	15,0	8
BB-300-3/8	3/8" BSPT	14,7	309	10	2,4	15,0	8
BB-200-1/2	1/2" BSPT	18,2	207	10	2,4	18,5	10
BB-400-1/2	1/2" BSPT	18,2	410	10	2,4	18,5	10
BB-300-3/4	3/4" BSPT	23,2	309	12	3,2	23,5	12
BB-500-3/4	3/4" BSPT	23,2	512	12	3,2	23,5	12

Brass Plug Baffles are constructed entirely of high quality brass with blades brazed to the plugs for long, dependable service. They provide a high pressure seal through a deliberate difference of taper between the plug and the tapped hole. Spiral baffles improve cooling balance by creating turbulent action in the channel providing efficient coolant movement.

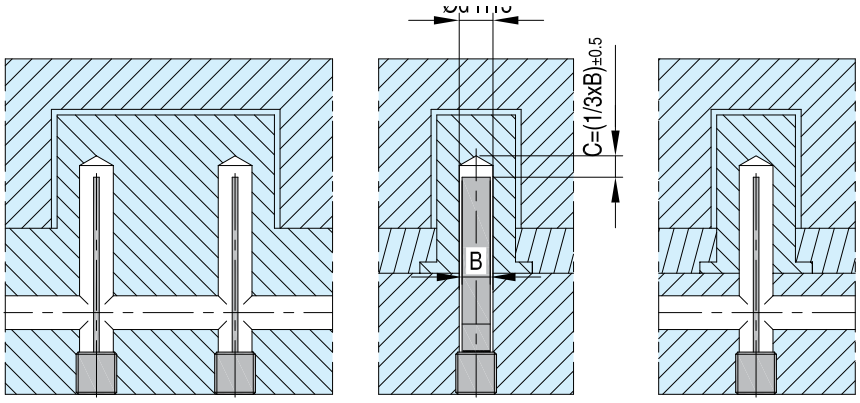

CAD reference point

Spiral brass plugs baffles

Mat.: Brass

BBS

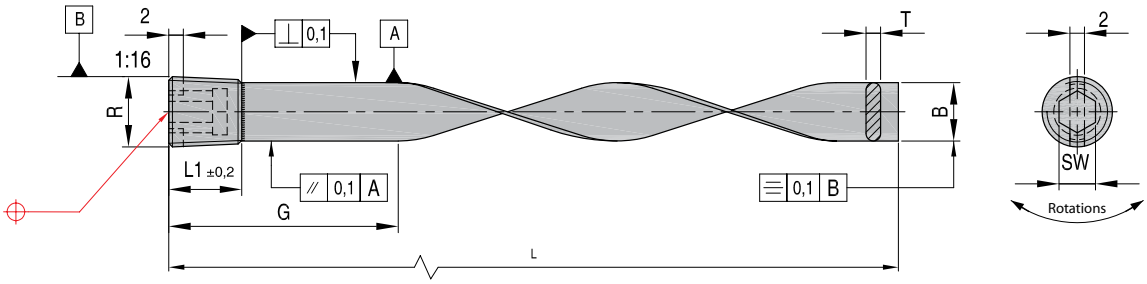

REF	R	G	B	L	L1	T	d1	ROTATIONS	SW
BBS-100-1/16	1/16" BSPT	51	6,2	102	8	1,6	6,5	360°	4
BBS-200-1/16	1/16" BSPT	102	6,2	202	8	1,6	6,5	540°	4
BBS-100-1/8	1/8" BSPT	51	8,2	102	8	1,6	8,5	360°	5
BBS-200-1/8	1/8" BSPT	102	8,2	202	8	1,6	8,5	540°	5
BBS-125-1/4	1/4" BSPT	51	11,2	127	10	2,4	11,5	360°	7
BBS-250-1/4	1/4" BSPT	102	11,2	252	10	2,4	11,5	540°	7
BBS-150-3/8	3/8" BSPT	51	14,7	152	10	2,4	15,0	360°	8
BBS-300-3/8	3/8" BSPT	102	14,7	302	10	2,4	15,0	540°	8
BBS-200-1/2	1/2" BSPT	76	18,2	203	10	2,4	18,5	360°	10
BBS-400-1/2	1/2" BSPT	127	18,2	402	10	2,4	18,5	540°	10
BBS-300-3/4	3/4" BSPT	102	23,2	[illegible]	12	3,2	23,5	360°	12
BBS-500-3/4	3/4" BSPT	153	23,2	[illegible]	12	3,2	23,5	540°	12
BBS-400-1	1" BSPT	127	28,2	[illegible]	12	3,2	28,5	360°	17
BBS-600-1	1" BSPT	203	28,2	[illegible]	12	3,2	28,5	540°	17

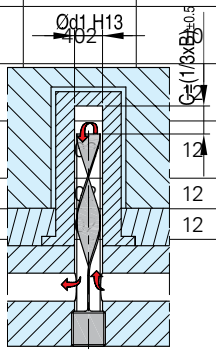

CAD reference point

MILACRON®

BB

Brass plug baffles Mat.: Brass

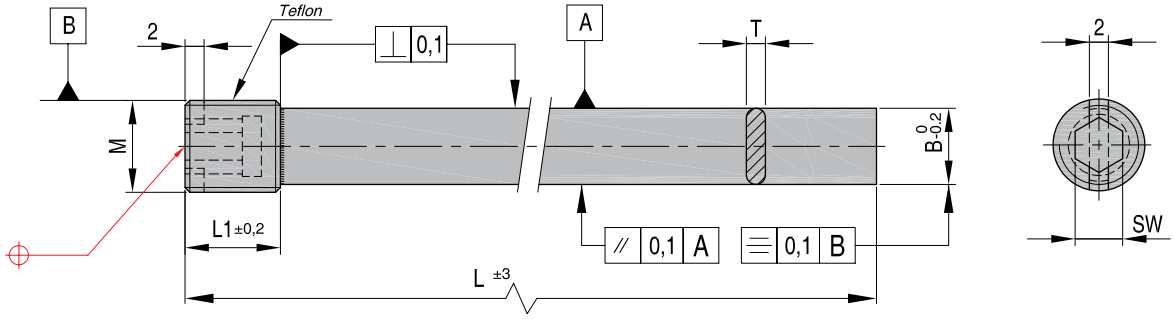

REF	M	SW	B	L	L1	T	d
BB-100-M8x0,75	M8x0,75	4	5,8	104	8	1,6	6
BB-200-M8x0,75	M8x0,75	4	5,8	204	8	1,6	6
BB-100-M10x1	M10x1	5	7,8	104	8	1,6	8
BB-200-M10x1	M10x1	5	7,8	204	8	1,6	8
BB-125-M12x1,5	M12x1,5	6	9,8	129	8	2,0	10
BB-250-M12x1,5	M12x1,5	6	9,8	254	8	2,0	10
BB-150-M16x1,5	M16x1,5	8	13,8	154	10	2,4	14
BB-300-M16x1,5	M16x1,5	8	13,8	304	10	2,4	14
BB-150-M20x1,5	M20x1,5	10	17,8	154	10	2,4	18
BB-200-M20x1,5	M20x1,5	10	17,8	304	10	2,4	18
BB-300-M20x1,5	M20x1,5	10	17,8	204	10	2,4	18
BB-400-M20x1,5	M20x1,5	10	17,8	404	10	2,4	18
BB-150-M24x2	M24x2	12	19,8	154	12	2,5	20
BB-300-M24x2	M24x2	12	19,8	304	12	2,5	20

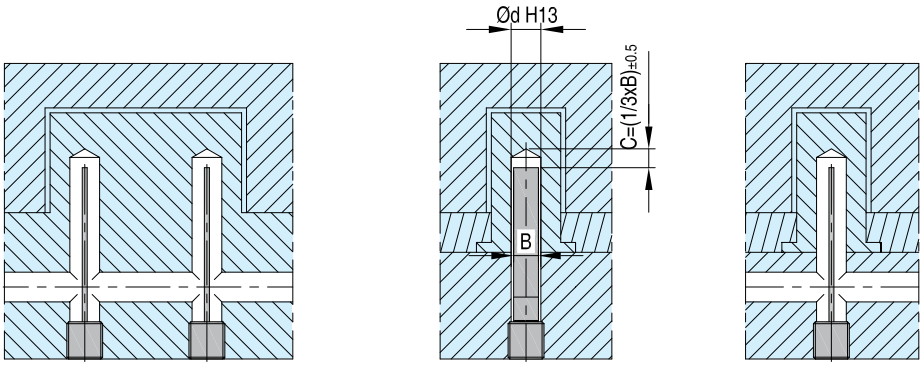

CAD reference point

Spiral brass plugs baffles

Mat.: Brass

BBS

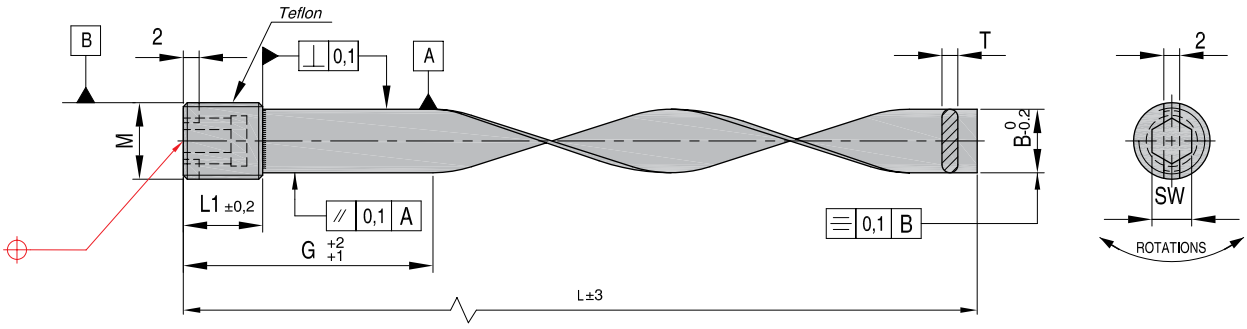

REF	M	G	SW	B	L	L1	T	2D1	Rotations
BBS-100-M8x0,75	M8x0,75	50	4	5,8	102	8	1,6	6	360°
BBS-200-M8x0,75	M8x0,75	100	4	5,8	202	8	1,6	6	540°
BBS-300-M8x0,75	M8x0,75	150	4	5,8	302	8	1,6	6	720°
BBS-100-M10x1	M10x1	50	5	7,8	102	8	1,6	8	360°
BBS-200-M10x1	M10x1	100	5	7,8	202	8	1,6	8	540°
BBS-300-M10x1	M10x1	150	5	7,8	302	8	1,6	8	720°
BBS-125-M12x1,5	M12x1,5	50	6	9,8	127	8	2,0	10	360°
BBS-250-M12x1,5	M12x1,5	100	6	9,8	252	8	2,0	10	540°
BBS-150-M16x1,5	M16x1,5	50	8	13,8	152	10	2,4	14	360°
BBS-300-M16x1,5	M16x1,5	100	8	13,8	302	10	2,4	14	540°
BBS-150-M20x1,5	M20x1,5	50	10	17,8	152	10	2,4	18	360°
BBS-300-M20x1,5	M20x1,5	100	10	17,8	302	10	2,4	18	540°
BBS-150-M24x2	M24x2	50	12	19,8	152	12	2,5	20	180°
BBS-300-M24x2	M24x2	100	12	19,8	302	12	2,5	20	540°

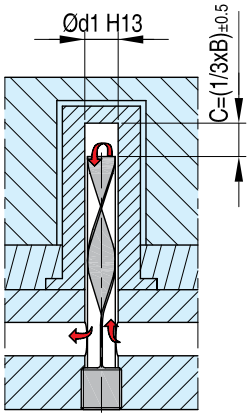

CAD reference point

MILACRON®

V

Cascade water junctions

Mat.: Brass

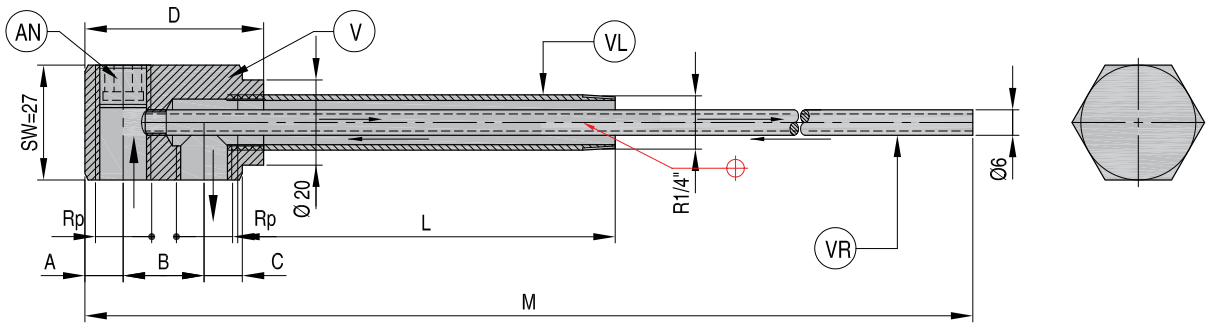

REF	Rp	M	A	B	D	C	L
V 485	1/8″	356	9	19	42	9	50
V 4810	1/8″	356	9	19	42	9	100
V 4815	1/8″	356	9	19	42	9	150
V 4820	1/8″	356	9	19	42	9	200
V 445	1/4″	356	9	19	42	9	50
V 4410	1/4″	356	9	19	42	9	100
V 4415	1/4″	356	9	19	42	9	150
V 4420	1/4″	356	9	19	42	9	200
V 585	1/8″	362	9	26	54	12	50
V 5810	1/8″	362	9	26	54	12	100
V 5815	1/8″	362	9	26	54	12	150
V 5820	1/8″	362	9	26	54	12	200
V 545	1/4″	362	9	26	54	12	50
V 5410	1/4″	362	9	26	54	12	100
V 5415	1/4″	362	9	26	54	12	150
V 5420	1/4″	362	9	26	54	12	200

Cascade Water Junctions are ideal for cooling plastics molds and die cast dies where drilled waterlines through the block are not possible due to interference with ejector pins, sprue puller pins, etc.

The brass tube has the rigidity to maintain uniform spacing inside the water channel and is threaded into the body for firm support. Waterlines may be connected to the same side or opposing sides of the brass hexagonal body.

CAD reference point

Body — Mat.: Brass — V

REF	Rp	A	B	D	C
V 48	1/8" BSP	9	19	42	9
V 44	1/4" BSP	9	19	42	9
V 58	1/8" BSP	9	26	54	12
V 54	1/4" BSP	9	26	54	12

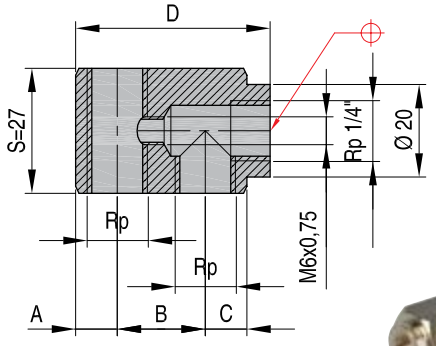

Feed pipes — Mat.: Brass — VR

REF	d	L
VR-6x340	6	340

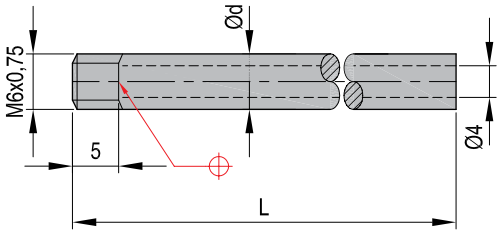

Extension pipes — Mat.: Zinc plated — VL

REF	R	d	L
VL 1/4" x 50	1/4" BSPT	9	50
VL 1/4" x 100	1/4" BSPT	9	100
VL 1/4" x 150	1/4" BSPT	9	150
VL 1/4" x 200	1/4" BSPT	9	200

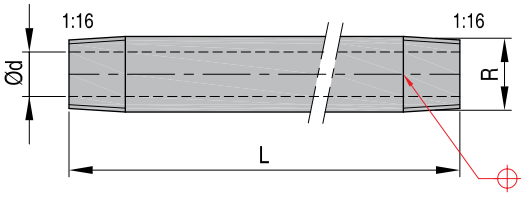

Pressure plugs — Mat.: Brass — AN

REF	R	L	SW
AN - 8	1/8" BSPT	8	5
AN - 4	1/4" BSPT	10	7

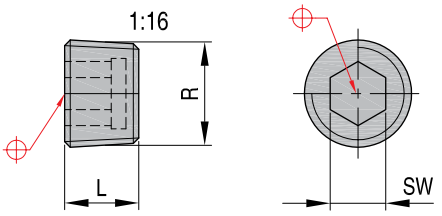

CAD reference point

MILACRON®

T 2000

Cascade water junctions

Mat.: Tube: Steel Nickel plated
Cylinder: Mat.: Brass Nickel plated

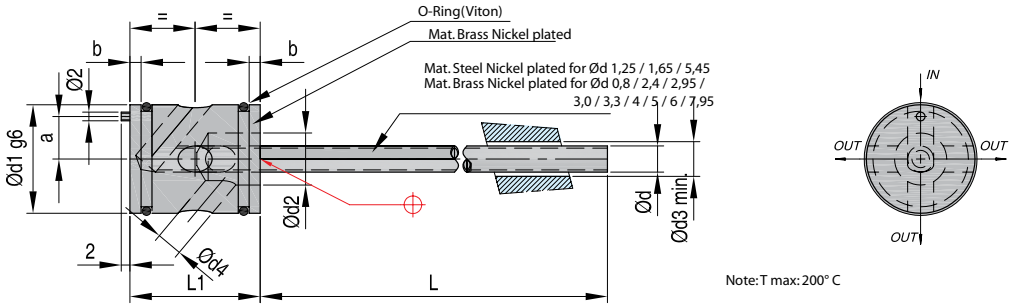

Note: T max: 200° C

REF d1 d x L	d1	d2	d4	d3	L1	L3	a	b	REF. O-RINGS
T2000 10 0,80x160	10	4,2	2	1,0	15	1,2	3,0	1,1	**DR 1710 6x2**
T2000 10 1,25x160	10	4,2	2	1,5	15	1,2	3,0	1,1	**DR 1710 6x2**
T2000 10 1,65x160	10	4,2	2	2,0	15	1,2	3,0	1,1	**DR 1710 6x2**
T2000 10 2,40x160	10	4,2	2	3,2	15	1,2	3,0	1,1	**DR 1710 6x2**
T2000 10 3,00x160	10	4,2	2	4,0	15	1,2	3,0	1,1	**DR 1710 6x2**
T2000 16 0,80x160	16	6,0	3	1,0	20	1,6	5,5	2,2	**DR 1710 12x2**
T2000 16 0,80x300	16	6,0	3	1,0	20	1,6	5,5	2,2	**DR 1710 12x2**
T2000 16 1,25x160	16	6,0	3	1,5	20	1,6	5,5	2,2	**DR 1710 12x2**
T2000 16 1,25x300	16	6,0	3	1,5	20	1,6	5,5	2,2	**DR 1710 12x2**
T2000 16 1,65x160	16	6,0	3	2,0	20	1,6	5,5	2,2	**DR 1710 12x2**
T2000 16 1,65x300	16	6,0	3	2,0	20	1,6	5,5	2,2	**DR 1710 12x2**
T2000 16 2,40x160	16	6,0	3	3,2	20	1,6	5,5	2,2	**DR 1710 12x2**
T2000 16 2,40x300	16	6,0	3	3,2	20	1,6	5,5	2,2	**DR 1710 12x2**
T2000 16 2,95x160	16	6,0	3	4,0	20	1,6	5,5	2,2	**DR 1710 12x2**
T2000 16 2,95x300	16	6,0	3	4,0	20	1,6	5,5	2,2	**DR 1710 12x2**
T2000 16 3,30x160	16	6,0	3	4,5	20	1,6	5,5	2,2	**DR 1710 12x2**
T2000 16 3,30x300	16	6,0	3	4,5	20	1,6	5,5	2,2	**DR 1710 12x2**
T2000 25 4,00x160	25	12,0	6	5,0	30	1,6	9,8	3,4	**DR 1710 21x2**
T2000 25 4,00x300	25	12,0	6	5,0	30	1,6	9,8	3,4	**DR 1710 21x2**
T2000 25 5,00x160	25	12,0	6	6,0	30	1,6	9,8	3,4	**DR 1710 21x2**
T2000 25 5,00x300	25	12,0	6	6,0	30	1,6	9,8	3,4	**DR 1710 21x2**
T2000 25 5,45x160	25	12,0	6	7,0	30	1,6	9,8	3,4	**DR 1710 21x2**
T2000 25 5,45x300	25	12,0	6	7,0	30	1,6	9,8	3,4	**DR 1710 21x2**
T2000 25 6,00x160	25	12,0	6	8,0	30	1,6	9,8	3,4	**DR 1710 21x2**
T2000 25 6,00x300	25	12,0	6	8,0	30	1,6	9,8	3,4	**DR 1710 21x2**
T2000 25 7,95x160	25	12,0	6	10,0	30	1,6	9,8	3,4	**DR 1710 21x2**
T2000 25 7,95x300	25	12,0	6	10,0	30	1,6	9,8	3,4	**DR 1710 21x2**

CAD reference point

T 2000

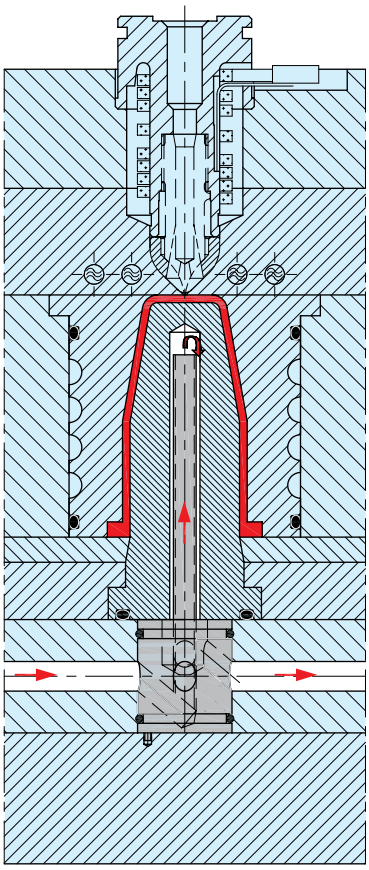

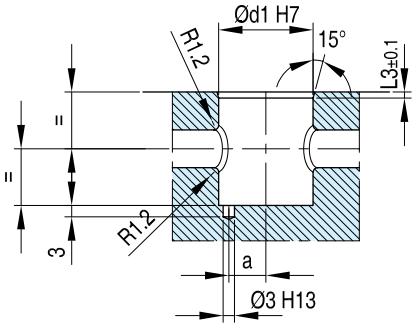

WWK

Head

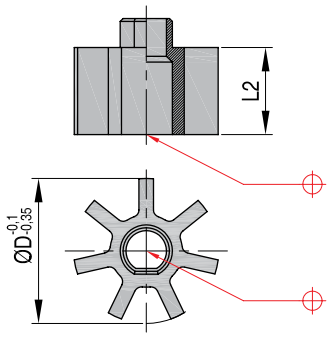

REF	D	L1
WWK 020	20	25
WWK 025	25	25
WWK 028	28	25
WWK 032	32	25
WWK 035	35	25
WWK 040	40	25
WWK 045	45	25
WWK 050	50	25

WWM

Center piece

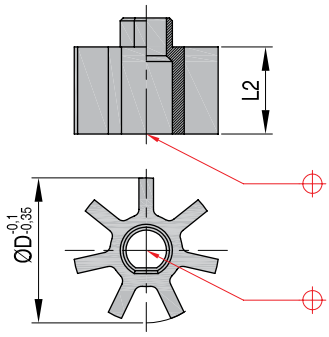

REF	D	L2
WWM 020	20	30
WWM 025	25	30
WWM 028	28	30
WWM 032	32	30
WWM 035	35	30
WWM 040	40	30
WWM 045	45	30
WWM 050	50	30

WWF

Base

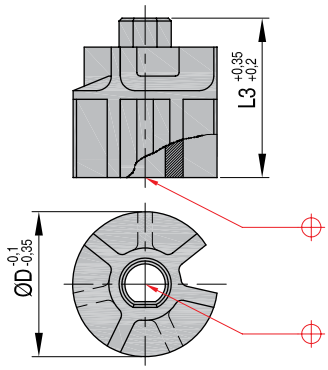

REF	D	L3	d
WWF 020	20	45	10
WWF 025	25	45	10
WWF 028	28	45	12
WWF 032	32	45	12
WWF 035	35	45	14
WWF 040	40	45	14
WWF 045	45	45	14
WWF 050	50	45	14

WWK-WWM-WWF

Plastic cooling cores

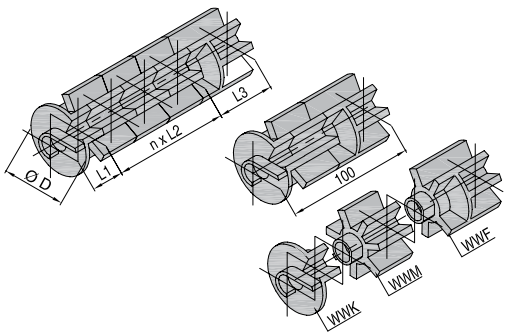

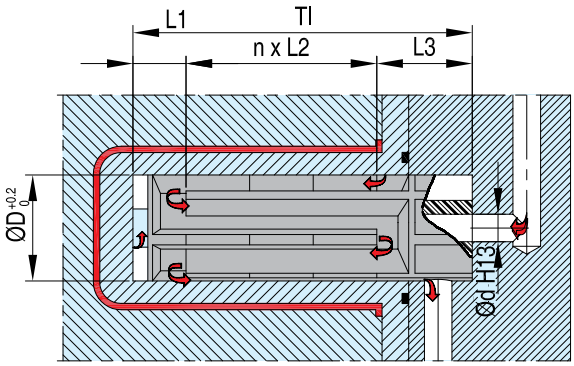

CAD reference point

Duo Press 60, power pump to test cooling lines for leaks

DUO-Press 60

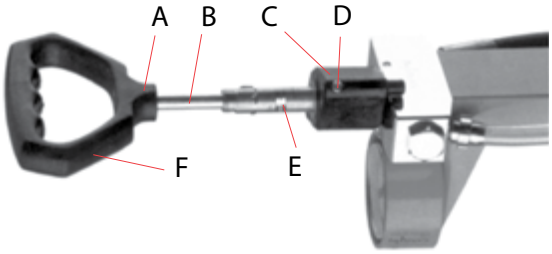

To check a system

1. Connect the coupling nut of the pressure hose to the system that needs to be checked. The system should then be filled with a suitable liquid.
2. Put the transparent suction hose in the liquid to be circulated.
3. Use the handle F to push both pistons A and B down to the stop.
4. Screw down both pistons completely by turning the handle clockwise.
5. Turn the steering unit C clockwise until the stop.
6. By turning the handle F gently to the left or right, the catch in the large piston is released, it is now possible to pump up to 15 bar.
7. In order to reach higher pressures with less effort, the handle is first pushed down completely, then turned anticlockwise. The catch engages.
8. By turning the handle further to the left both pistons A and B are separated.
9. It is now possible to reach pressures up to 60 bar effort- lessly by pumping through the smallest piston.

To empty the system

1. In order to secure both pistons A and B together, the handle F is pushed down fully and turned clockwise.
2. Continue to turn the handle F gently, the pistons are now in the rest position. When the catch D engages, a soft click is heard.
3. Turn the steering unit C anticlockwise. The pressurised fluid flows through the pump system and suction hose back into the tank.

Technical specification:

Pressure:	max. 60 bar
Weight:	5 kg
Piston diameter:	piston 1: 16 mm piston 2: 10 mm
Test liquids:	water or oil

REF
DUO

REF
DUO-0060

Cascade water junctions

EAS

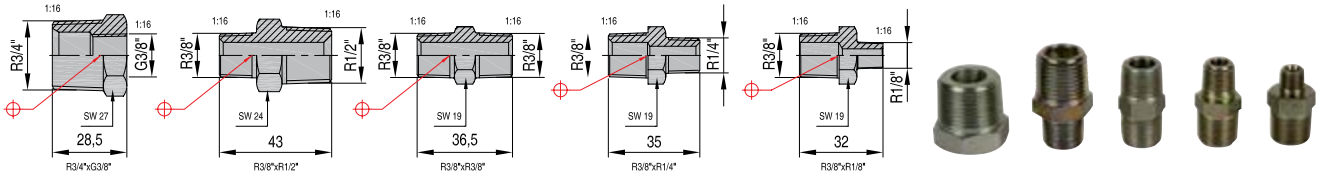

REF
EAS-0001

CAD reference point

WL - WM - WH

Heat Transfer Rods

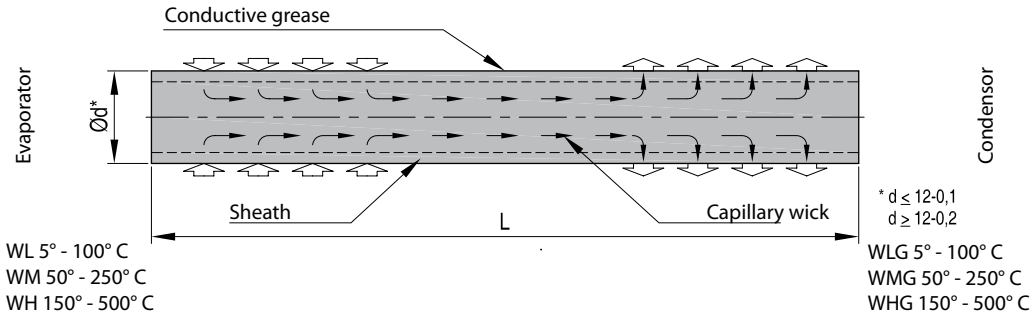

General description

The **DME** Heat Transfer Rods are static devices with very high thermal conductivity (over a thousand times greater than copper rods).
It allows an important transmission of thermal power with a very low temperature gradient (a few degrees only).

Operation

DME Heat Transfer Rods work on the basis of latent heat with a difference of only about 10°C in temperature between each end.
At the "hot" end of the tube, the liquid evaporates and absorbs energy. The resulting vapour moves to the "cold" end of the tube, where it condenses and releases energy. The liquid then flows back to the other end by gravity and capillary action. The latter occurs over a mesh inside the rod.

DME Service

DME provides recommendations on the most efficient use of Heat Transfer Rods in injection moulding or diecasting applications. In most cases, an application analysis will determine the estimated cycle time. Just fill out and fax or email the attached questionnaire. Our application engineers will submit a suitable quotation by return.

Application

Heat Transfer Rods are used in the following industries:

- Die casting
- Injection moulding for:
  a) Cooling (molds)
  b) Pre-heating of material
  c) Leveling of service temperatures

Advantages

1. **Simplified mold construction**
   The **DME** Heat Transfer Rods are used in cores, core slides, cavities and other areas of a mold or die requiring cooling or controlled temperatures. In addition, the ability to locate Heat Transfer Rods in areas inaccessible to other cooling devices can further simplify the overall mold design.
   In most of the cases, the machining and construction time required for the mould is reduced, thus lowering mould making costs.
2. **Faster cycle times**
   The cooling lines, throughout the entire mould can be larger in diameter, permitting a higher cooling velocity. A larger volume of fluid flowing through the cooling lines results in a lower overall coolant temperature rise.
   The ability to transfer heat away from the otherwise inaccessible areas improves the overall cooling rate and reduces the cycle time.
3. **Improved product quality**
   The Heat Transfer Rod transfers heat to the coolant, air or mold components, it also dissipates heat evenly along its entire length. This isotherm action provides faster and more uniform cooling, thus eliminating hot spots which cause sink marks, pulling and spotting.
4. **Reduced maintenance costs**
   The increased waterline diameter, coolant velocity and heat capacity eliminate scale formation. Consequently, cooling system maintenance and overall operating costs are almost nil.
5. **Retrofit in existing molds and dies**
   In addition to their many applications Heat Transfer Rods have been retrofitted as replacement parts for bubblers of baffles and provide heat transfer in previously uncooled areas.

Heat Transfer Rods

WL(G)

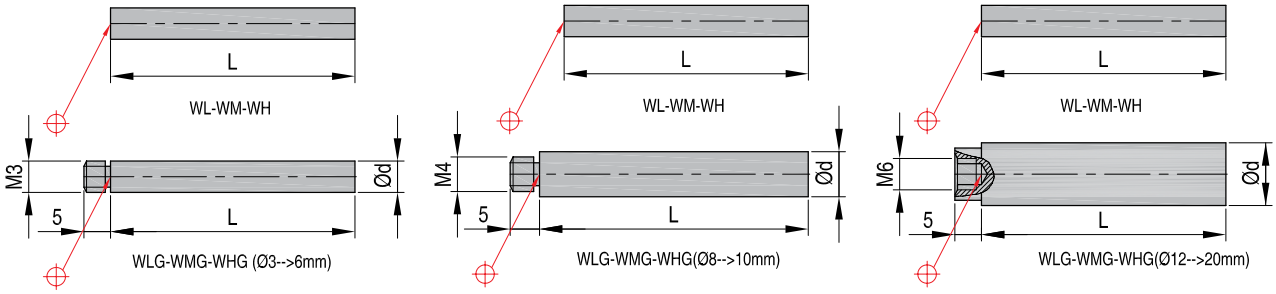

REF(G)	d	L	REF(G)	d	L	REF(G)	d	L
WL-2-50	2	50	**WL-6-80**	6	80	**WL-12-90**	12	90
WL-2-65	2	65	**WL-6-90**	6	90	**WL-12-120**	12	120
WL-2-80	2	80	**WL-6-120**	6	120	**WL-12-160**	12	160
WL-2-90	2	90	**WL-6-160**	6	160	**WL-12-200**	12	200
WL-2-120	2	120	**WL-6-200**	6	200	**WL-12-270**	12	270
WL-3-50	3	50	**WL-6-270**	6	270	**WL-12-320**	12	320
WL-3-65	3	65	**WL-8-50**	8	50	**WL-16-50**	16	50
WL-3-80	3	80	**WL-8-65**	8	65	**WL-16-65**	16	65
WL-3-90	3	90	**WL-8-80**	8	80	**WL-16-80**	16	80
WL-3-120	3	120	**WL-8-90**	8	90	**WL-16-90**	16	90
WL-4-50	4	50	**WL-8-120**	8	120	**WL-16-120**	16	120
WL-4-65	4	65	**WL-8-160**	8	160	**WL-16-160**	16	160
WL-4-80	4	80	**WL-8-200**	8	200	**WL-16-200**	16	200
WL-4-90	4	90	**WL-8-270**	8	270	**WL-16-270**	16	270
WL-4-120	4	120	**WL-10-50**	10	50	**WL-16-320**	16	320
WL-4-160	4	160	**WL-10-65**	10	65	**WL-20-50**	20	50
WL-4-200	4	200	**WL-10-80**	10	80	**WL-20-65**	20	65
WL-5-50	5	50	**WL-10-90**	10	90	**WL-20-80**	20	80
WL-5-65	5	65	**WL-10-120**	10	120	**WL-20-90**	20	90
WL-5-80	5	80	**WL-10-160**	10	160	**WL-20-120**	20	120
WL-5-90	5	90	**WL-10-200**	10	200	**WL-20-160**	20	160
WL-5-120	5	120	**WL-10-270**	10	270	**WL-20-200**	20	200
WL-5-160	5	160	**WL-10-320**	10	320	**WL-20-270**	20	270
WL-5-200	5	200	**WL-12-50**	12	50	**WL-20-320**	20	320
WL-6-50	6	50	**WL-12-65**	12	65			
WL-6-65	6	65	**WL-12-80**	12	80			

CAD reference point

MILACRON®

WM(G)

Heat Transfer Rods

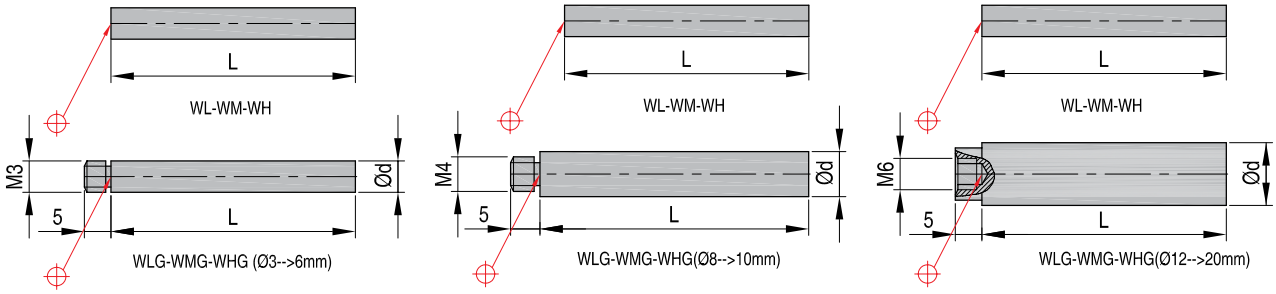

REF(G)	d	L	REF(G)	d	L	REF(G)	d	L
WM-2-50	2	50	**WM-6-80**	6	80	**WM-12-90**	12	90
WM-2-65	2	65	**WM-6-90**	6	90	**WM-12-120**	12	120
WM-2-80	2	80	**WM-6-120**	6	120	**WM-12-160**	12	160
WM-2-90	2	90	**WM-6-160**	6	160	**WM-12-200**	12	200
WM-2-120	2	120	**WM-6-200**	6	200	**WM-12-270**	12	270
WM-3-50	3	50	**WM-6-270**	6	270	**WM-12-320**	12	320
WM-3-65	3	65	**WM-8-50**	8	50	**WM-16-50**	16	50
WM-3-80	3	80	**WM-8-65**	8	65	**WM-16-65**	16	65
WM-3-90	3	90	**WM-8-80**	8	80	**WM-16-80**	16	80
WM-3-120	3	120	**WM-8-90**	8	90	**WM-16-90**	16	90
WM-4-50	4	50	**WM-8-120**	8	120	**WM-16-120**	16	120
WM-4-65	4	65	**WM-8-160**	8	160	**WM-16-160**	16	160
WM-4-80	4	80	**WM-8-200**	8	200	**WM-16-200**	16	200
WM-4-90	4	90	**WM-8-270**	8	270	**WM-16-270**	16	270
WM-4-120	4	120	**WM-10-50**	10	50	**WM-16-320**	16	320
WM-4-160	4	160	**WM-10-65**	10	65	**WM-20-50**	20	50
WM-4-200	4	200	**WM-10-80**	10	80	**WM-20-65**	20	65
WM-5-50	5	50	**WM-10-90**	10	90	**WM-20-80**	20	80
WM-5-65	5	65	**WM-10-120**	10	120	**WM-20-90**	20	90
WM-5-80	5	80	**WM-10-160**	10	160	**WM-20-120**	20	120
WM-5-90	5	90	**WM-10-200**	10	200	**WM-20-160**	20	160
WM-5-120	5	120	**WM-10-270**	10	270	**WM-20-200**	20	200
WM-5-160	5	160	**WM-10-320**	10	320	**WM-20-270**	20	270
WM-5-200	5	200	**WM-12-50**	12	50	**WM-20-320**	20	320
WM-6-50	6	50	**WM-12-65**	12	65			
WM-6-65	6	65	**WM-12-80**	12	80			

CAD reference point

Heat Transfer Rods

WH(G)

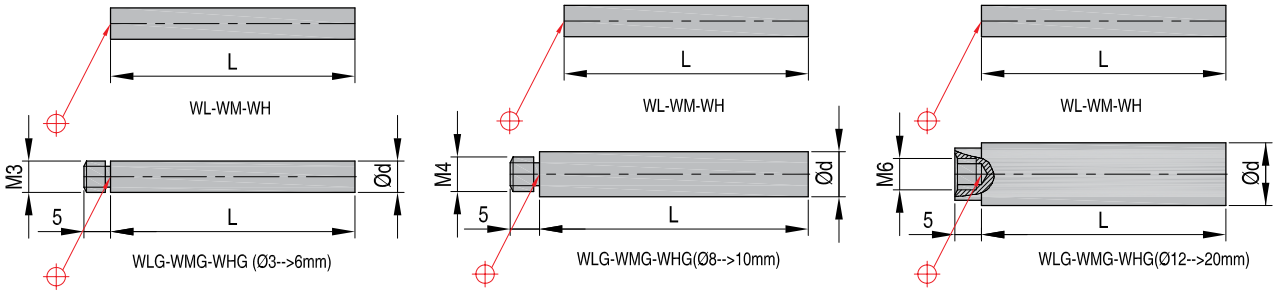

REF(G)	d	L
WH-3-50	3	50
WH-3-65	3	65
WH-3-80	3	80
WH-3-90	3	90
WH-3-120	3	120
WH-4-50	4	50
WH-4-65	4	65
WH-4-80	4	80
WH-4-90	4	90
WH-4-120	4	120
WH-4-160	4	160
WH-4-200	4	200
WH-5-50	5	50
WH-5-65	5	65
WH-5-80	5	80
WH-5-90	5	90
WH-5-120	5	120
WH-5-160	5	160
WH-5-200	5	200
WH-6-50	6	50
WH-6-65	6	65

REF(G)	d	L
WH-6-80	6	80
WH-6-90	6	90
WH-6-120	6	120
WH-6-160	6	160
WH-6-200	6	200
WH-6-270	6	270
WH-8-50	8	50
WH-8-65	8	65
WH-8-80	8	80
WH-8-90	8	90
WH-8-120	8	120
WH-8-160	8	160
WH-8-200	8	200
WH-8-270	8	270
WH-10-50	10	50
WH-10-65	10	65
WH-10-80	10	80
WH-10-90	10	90
WH-10-120	10	120
WH-10-160	10	160
WH-10-200	10	200
WH-10-270	10	270
WH-10-320	10	320
WH-12-50	12	50
WH-12-65	12	65
WH-12-80	12	80

REF(G)	d	L
WH-12-90	12	90
WH-12-120	12	120
WH-12-160	12	160
WH-12-200	12	200
WH-12-270	12	270
WH-12-320	12	320
WH-16-50	16	50
WH-16-65	16	65
WH-16-80	16	80
WH-16-90	16	90
WH-16-120	16	120
WH-16-160	16	160
WH-16-200	16	200
WH-16-270	16	270
WH-16-320	16	320
WH-20-50	20	50
WH-20-65	20	65
WH-20-80	20	80
WH-20-90	20	90
WH-20-120	20	120
WH-20-160	20	160
WH-20-200	20	200
WH-20-270	20	270
WH-20-320	20	320

CAD reference point

DME 63 - MS 110 - MS 120

REF	Quantity
DME 63	400 ml
MS 110	450 gr
MS 120	10 gr

Working range
The **DME** Heat Transfer Rods contain heat exchange fluid specially selected for the temperature of operation. They are available in 3 Series providing high transfer efficiency over a given range of temperatures. For low and medium temperatures, the WL Series covers the range from 5 to 100°C and the WM Series from 50°C to 250°C.
For high temperatures, the WH Series covers the range from 150°C to 500°C.
It is always recommended to choose the largest diameter and greatest length.
Graphs should not be used for determining energy values.
At each end of each curve, there is a critical zone in which the operation of the Heat Transfer Rod does not present the best guarantee of efficiency.

Operating Temperature

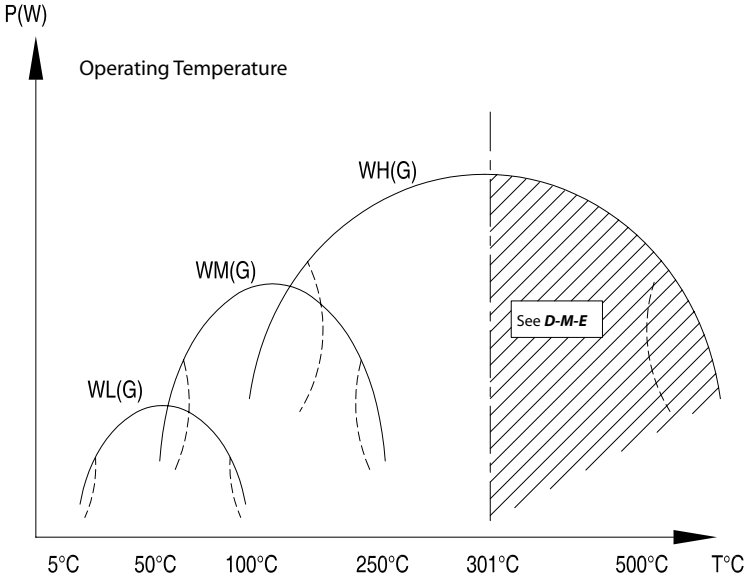

Installation Instruction WL(G) - WM(G) - WH(G)

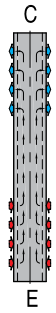

Recommended

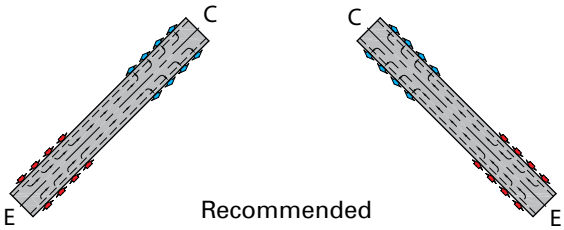

Recommended

Recommended

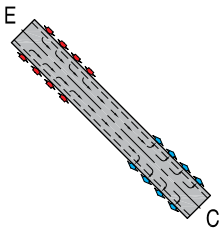

Avoid where possible

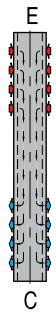

Not recommended

With proper installation, the rod may last as long as the mold. Efficiency of the HeatTransfer Rods varies, according to their position, length and diameter. A correct working action of the rod is obtained by reducing the thermal resistances to a minimum by using a thermal bond of the **DME** Heat Transfer Paste 63.

As the fluid inside the rod circulates by gravity and capillarity, the best position for the rod is the vertical position (bottom: heat source + evaporation / top: cold section + condensation).

The less efficient position is the reserved position (bottom: cold section + condensation / top: heat source + evaporation).

- Drill a blind hole of 0,1 mm larger than the nominal diameter of the rod for diameters ranging from 2 to 10 mm and 0,2 mm for those larger than 12 mm.
- Make sure no chips remain into the drilled hole.
- Insert into the hole the **DME** Heat Transfer Paste 63 which will insure a thermal contact (thermal bond) between the rod and the steel mass of the mould.
- Push the rod into the hole, thus allowing the Heat Transfer Paste 63 to drive back along the hole wall.

C = condensator + cold section
E = evaporator + heat source

Installation Instruction WL(G) - WM(G) - WH(G)

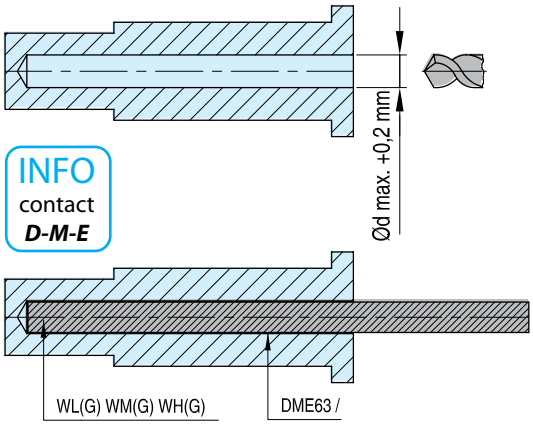

Irregular shapes of the zone to be cooled
As a general rule, it is advisable to install a Heat Transfer Rod with maximum diameter and maximum length acceptable. When there is a narrow section into the zone to be cooled, where a small diameter should be necessary, it is better to install the rod farther away from the surface to be cooled in order to have a bigger diameter rather than to install a small diameter closer to the surface to be cooled.

Fig. I

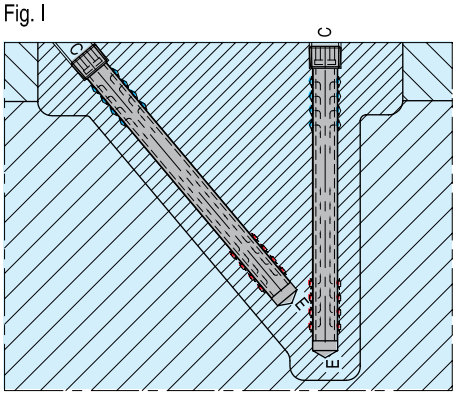

Fig. II

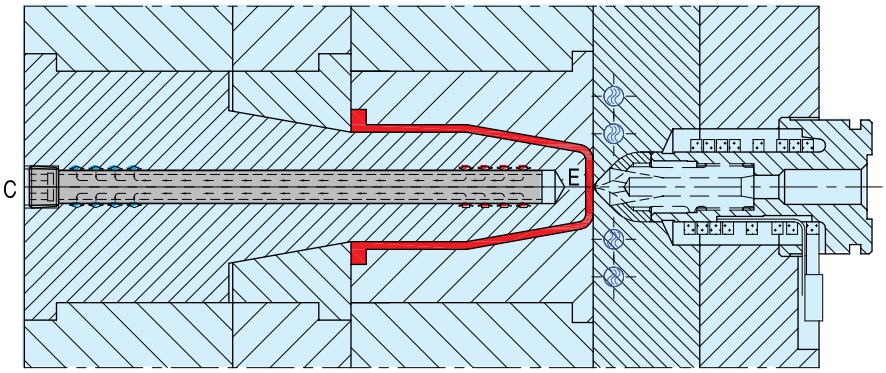

Examples
Inside a core:
1) All types: without cooling lines (thermal conduction into the cold part of the mould).
2) Heat Transfer Rod not in contact with the cooling fluid. The transfer is obtained by means of a cooling line circulating close to the end of the rod.
3) Cooling by means of air circulation. It is however preferable to allow the heat transfer by thermal conduction into the mould rather than by air circulation, the thermal exchanges being low in this latter case.

Fig. III

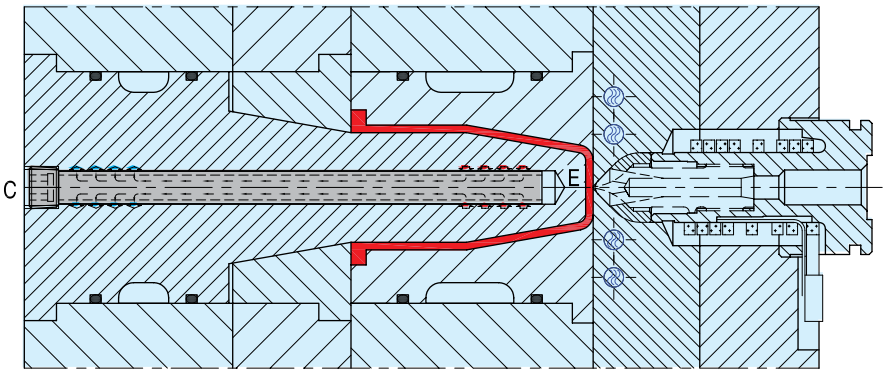

O-Rings Mat.: Perbunan Hardness: ~72 Shore T= -40°C --> 100°C

DR 1700

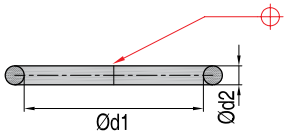

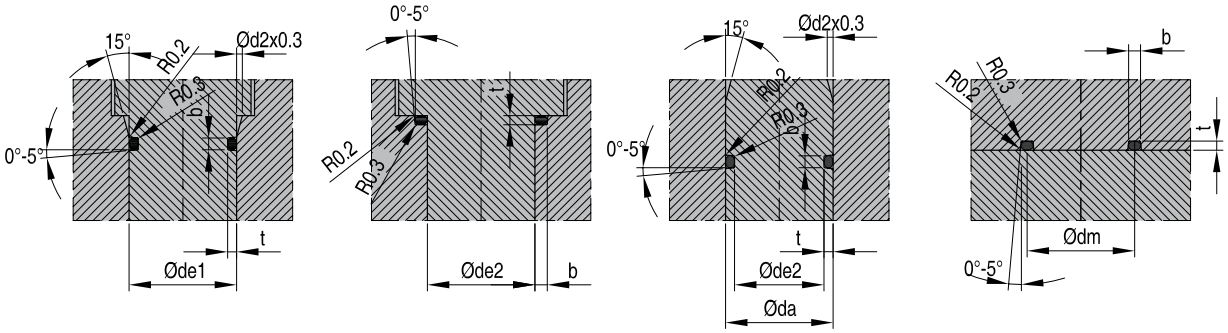

REF	d1	d2	da	de1	de2	dm	b	t
DR 1700 10 x 2,00	10	2,00	13,2	13,2	10	12,00	2,6	1,6
DR 1700 10 x 3,00	10	3,00	14,8	14,8	10	13,00	3,9	2,4
DR 1700 100 x 3,00	100	3,00	104,8	104,8	100	103,00	3,9	2,4
DR 1700 100 x 4,00	100	4,00	106,4	106,4	100	104,00	5,2	3,2
DR 1700 105 x 4,00	105	4,00	111,4	111,4	105	109,00	5,2	3,2
DR 1700 12 x 1,50	12	1,50	14,2	14,8	12	13,50	1,9	1,2
DR 1700 12 x 2,00	12	2,00	15,2	15,2	12	14,00	2,6	1,6
DR 1700 12 x 3,00	12	3,00	16,8	16,8	12	15,00	3,9	2,4
DR 1700 120 x 2,00	120	2,00	123,2	123,2	120	122,00	2,6	1,6
DR 1700 13 x 3,00	13	3,00	17,8	17,8	13	16,00	3,9	2,4
DR 1700 130 x 5,00	130	5,00	138,0	138	130	135,00	6,5	4,0
DR 1700 14 x 1,60	14	1,60	16,6	16,6	14	15,60	2,0	1,3
DR 1700 14 x 2,00	14	2,00	17,2	17,2	14	16,00	2,6	1,6
DR 1700 140 x 4,00	140	4,00	146,4	146,4	140	144,00	5,2	3,2
DR 1700 150 x 2,00	150	2,00	153,2	153,2	150	152,00	2,6	1,6
DR 1700 150 x 4,00	150	4,00	156,4	156,4	150	154,00	5,2	3,2
DR 1700 16 x 1,25	16	1,25	18,0	18,0	16	17,25	1,6	1,0
DR 1700 16 x 2,00	16	2,00	19,2	19,2	16	18,00	2,6	1,6
DR 1700 17 x 3,00	17	3,00	21,8	21,8	17	20,00	3,9	2,4
DR 1700 18 x 1,50	18	1,50	20,4	20,4	18	19,50	1,9	1,2
DR 1700 185 x 6,00	185	6,00	194,6	194,6	185	191,00	7,5	4,8
DR 1700 20 x 2,00	20	2,00	23,2	23,2	20	22,00	2,6	1,6
DR 1700 20 x 3,00	20	3,00	24,8	24,8	20	23,00	3,9	2,4
DR 1700 20 x 4,00	20	4,00	26,4	26,4	20	24,00	5,2	3,2
DR 1700 210 x 4,00	210	4,00	216,4	216,4	210	214,00	5,2	3,2
DR 1700 22 x 3,00	22	3,00	26,8	26,8	22	25,00	3,9	2,4
DR 1700 26 x 3,00	26	3,00	30,8	30,8	26	29,00	3,9	2,4

CAD reference point

MILACRON®

DR 1700

O-Rings Mat.: Perbunan Hardness: ~72 Shore T= -40°C --> 100°C

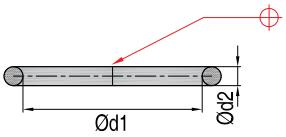

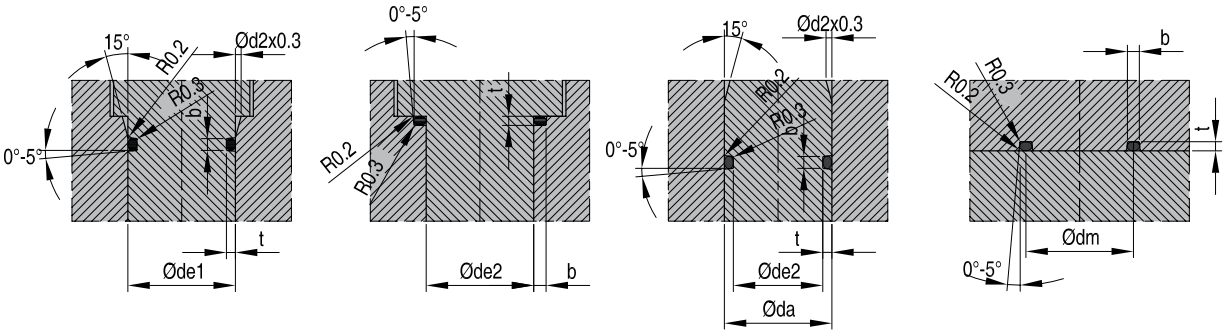

REF	d1	d2	da	de1	de2	dm	b	t
DR 1700 27 x 3,20	27	3,20	32,2	32,2	27	30,20	4,2	2,6
DR 1700 30 x 2,00	30	2,00	33,2	33,2	30	32,00	2,6	1,6
DR 1700 30 x 3,00	30	3,00	34,8	34,8	30	33,00	3,9	2,4
DR 1700 30 x 4,00	30	4,00	36,4	36,4	30	34,00	5,2	3,2
DR 1700 32 x 4,00	32	4,00	38,4	38,4	32	36,00	5,2	3,2
DR 1700 35 x 3,20	35	3,20	40,2	40,2	35	38,20	4,2	2,6
DR 1700 38 x 4,00	38	4,00	44,4	44,4	38	42,00	5,2	3,2
DR 1700 40 x 2,00	40	2,00	43,2	43,2	40	42,00	2,6	1,6
DR 1700 40 x 3,00	40	3,00	44,8	44,8	40	43,00	3,9	2,4
DR 1700 40 x 4,00	40	4,00	46,4	46,4	40	44,00	5,2	3,2
DR 1700 42 x 3,00	42	3,00	46,8	46,8	42	45,00	3,9	2,4
DR 1700 45 x 4,00	45	4,00	51,4	51,4	45	49,00	5,2	3,2
DR 1700 48 x 4,00	48	4,00	54,4	54,4	48	52,00	5,2	3,2
DR 1700 50 x 2,00	50	2,00	53,2	53,2	50	52,00	2,6	1,6
DR 1700 50 x 4,00	50	4,00	56,4	56,4	50	54,00	5,2	3,2
DR 1700 52 x 3,00	52	3,00	56,8	56,8	52	55,00	3,9	2,4
DR 1700 59 x 3,00	59	3,00	63,8	63,8	59	62,00	3,9	2,4
DR 1700 6 x 2,00	6	2,00	9,2	9,2	6	8,00	2,6	1,6
DR 1700 6 x 2,50	6	2,50	10,0	10,0	6	8,50	3,2	2,0
DR 1700 60 x 3,00	60	3,00	64,8	64,8	60	63,00	3,9	2,4
DR 1700 60 x 4,00	60	4,00	66,4	66,4	60	64,00	5,2	3,2
DR 1700 70 x 3,00	70	3,00	74,8	74,8	70	73,00	3,9	2,4
DR 1700 70 x 4,00	70	4,00	76,4	76,4	70	74,00	5,2	3,2
DR 1700 8 x 2,00	8	2,00	11,2	11,2	8	10,00	2,6	1,6
DR 1700 80 x 2,80	80	2,80	84,4	84,4	80	82,80	3,7	2,2
DR 1700 80 x 4,00	80	4,00	86,4	86,4	80	84,00	5,2	3,2
DR 1700 84 x 3,00	84	3,00	88,8	88,8	84	87,00	3,9	2,4
DR 1700 90 x 4,00	90	4,00	96,4	96,4	90	94,00	5,2	3,2

CAD reference point

O-Rings

Mat.: FPM (Viton) Hardness: ~80 Shore.T max: +200°C air-permanent. +250°C air-temporary. +100°C water-permanent

DR 1710

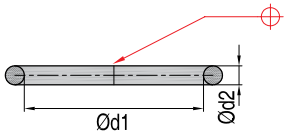

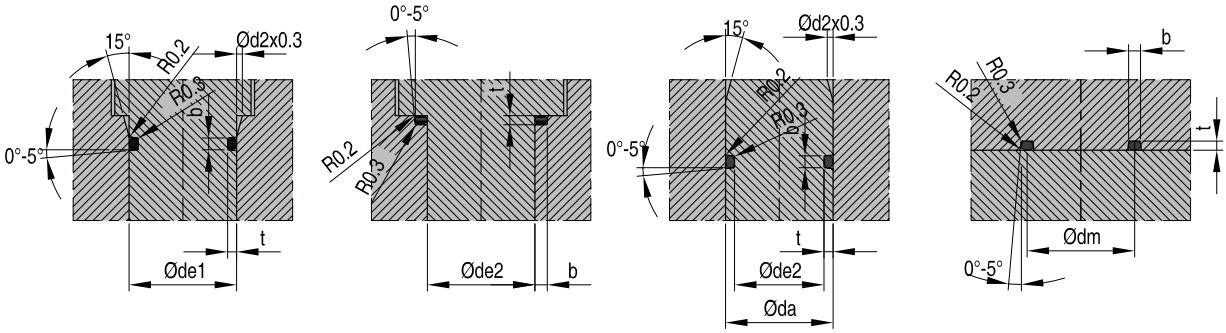

REF	d1	d2	da	de1	de2	dm	b	t
DR 1710 3,50 x 1,50	3,50	1,50	5,7	6	3,5	5,00	1,9	1,20
DR 1710 5,50 x 1,50	5,50	1,50	7,7	8	5,5	7,00	1,9	1,20
DR 1710 6,00 x 2,00	6,00	2,00	9,0	10	6,0	8,00	2,7	1,50
DR 1710 6,35 x 1,78	6,35	1,78	9,1	10	6,5	8,13	2,2	1,45
DR 1710 7,50 x 1,50	7,50	1,50	9,7	10	7,5	9,00	1,9	1,20
DR 1710 8,00 x 2,50	8,00	2,50	11,7	12	8,0	10,50	3,2	2,00
DR 1710 10,00 x 2,50	10,00	2,50	13,7	14	10,0	12,50	3,2	2,00
DR 1710 12,00 x 2,00	12,00	2,00	15,0	16	12,0	14,00	2,7	1,50
DR 1710 12,00 x 2,50	12,00	2,50	15,7	16	12,0	14,50	2,2	2,00
DR 1710 12,42 x 1,78	12,42	1,78	15,1	16	12,5	14,20	3,2	1,45
DR 1710 14,00 x 2,50	14,00	2,50	17,7	18	14,0	16,50	3,2	2,00
DR 1710 16,00 x 2,50	16,00	2,50	19,7	20	16,0	18,50	3,9	2,00
DR 1710 17,00 x 3,00	17,00	3,00	21,6	22	17,0	20,00	3,9	2,40
DR 1710 20,00 x 3,00	20,00	3,00	24,6	25	20,0	23,00	2,7	2,40
DR 1710 21,00 x 2,00	21,00	2,00	24,0	25	21,0	23,00	2,2	1,50
DR 1710 21,95 x 1,78	21,95	1,78	24,6	25	22,0	23,73	3,9	1,45
DR 1710 23,00 x 3,00	23,00	3,00	27,6	28	23,0	26,00	3,9	2,40
DR 1710 25,00 x 3,00	25,00	3,00	29,6	30	25,0	28,00	3,9	2,40
DR 1710 27,00 x 3,00	27,00	3,00	31,6	32	27,0	30,00	3,9	2,40
DR 1710 30,00 x 3,00	30,00	3,00	34,6	35	30,0	33,00	3,9	2,40
DR 1710 35,00 x 3,00	35,00	3,00	39,6	40	35,0	38,00	3,9	2,40
DR 1710 40,00 x 3,00	40,00	3,00	44,6	45	40,0	43,00	3,9	2,40
DR 1710 45,00 x 3,00	45,00	3,00	49,6	50	45,0	48,00	3,9	2,40
DR 1710 55,00 x 3,00	55,00	3,00	59,6	60	55,0	58,00	3,9	2,40
DR 1710 58,00 x 3,00	58,00	3,00	62,6	63	58,0	61,00	3,9	2,40
DR 1710 64,00 x 4,00	64,00	4,00	70,2	70	64,0	68,00	5,2	3,20
DR 1710 74,00 x 4,00	74,00	4,00	80,2	80	74,0	78,00	5,2	3,20
DR 1710 84,00 x 4,00	84,00	4,00	90,2	90	84,0	88,00	5,2	3,20
DR 1710 94,00 x 4,00	94,00	4,00	100,2	100	94,0	98,00	5,2	3,20
DR 1710 104,00 x 4,00	104,00	4,00	110,2	110	104,0	108,00	5,2	3,20
DR 1710 120,00 x 4,00	120,00	4,00	126,2	126	120,0	124,00	5,2	3,20
DR 1710 134,00 x 4,00	134,00	4,00	140,2	140	134,0	138,00	5,2	3,20
DR 1710 155,00 x 4,00	155,00	4,00	161,2	161	155,0	159,00	5,2	3,20

CAD reference point