MILACRON®

HZ160R

Hydraulic cylinder

Interchangeability acc. to ISO 6020/2-1981
Symbolization acc. to ISO 6099
Standardized accesories acc. to ISO 8133
Installation only with fasteners from property class 10.9
All **DME** HZ cylinders are fitted with magnets mounted on the piston to enable use of magnetic switches. Magnetic switches offer more straightforward installation than mechanical switches, simplifying setup and maintenance costs.

Pmax = 160 bar (for size 50 only 120 bar)
Tmax = 80° C (max working temperature)
Head + rear cushioning and air bleed
Max piston speed: Vmax = 0,7 - 0,8 m/s

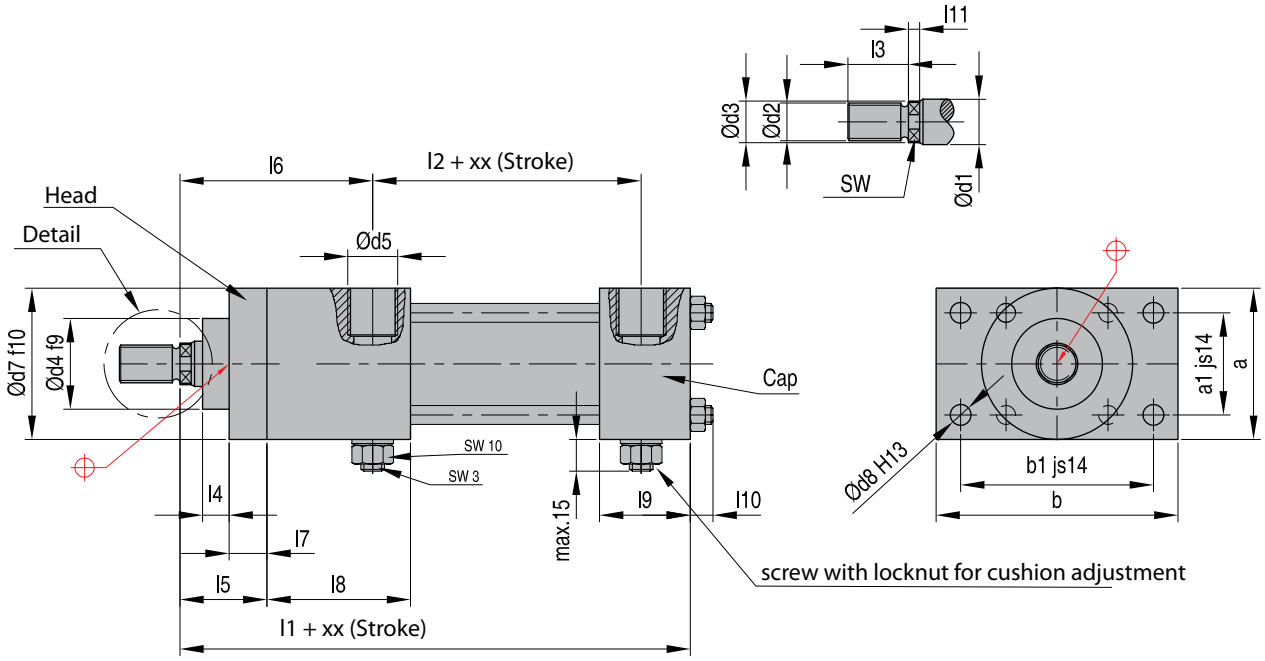

REF	d1	d2	d3	d4	d5	d7*	d8	l1	l2	l3	l4	l5	l6	l7	l8	l9	l10	l11	a	a1	b	b1	SW	S
HZ160R-25-xx	12	M10x1,25	11	24	R1/4"	44	5,5	114	51	14	7	25	51	10	38	24	8	5	40	27,0	64	51	10	16
HZ160R-32-xx	14	M12x1,25	13	26	R1/4"	50	6,5	128	55	16	9	35	61	10	38	25	10	8	46	33,2	70	58	11	17
HZ160R-40-xx	18	M14x1,50	17	30	R3/8"	57	11,0	153	68	18	8	35	63	10	43	37	12	6	60	41,0	109	87	15	20
HZ160R-50-xx	22	M16x1,50	21	34	R1/2"	70	13,5	159	72	22	9	41	67	16	43	37	16	8	75	52,0	128	105	18	20

FD=thrust in kg FZ=traction force in kg	P bar												xx(Stroke)												
	80		90		100		120		125		160														
d	FD	FZ	FD	FZ	FD	FZ	FD	FZ	FD	FZ	FD	FZ	20	50	80	100	125	160	200	250	300	350	400	500	600
25	392	302	442	340	490	377	589	453	613	471	785	603	S	S	S	S	S	S	S	UR					
32	643	520	724	585	804	650	965	780	1005	812	1286	1040	S	S	S	S	S	S	S	UR	UR				
40	1004	800	1131	902	1256	1001	1508	1203	1570	1251	2009	1601	S	S	S	S	S	S	S	UR	UR	UR	UR		
50	1570	1265	1767	1425	1963	1582	2356	1900					S	S	S	S	S	S	S	UR	UR	UR	UR	UR	UR

S = Standard
UR = Upon request

Hydraulic cylinder

HZ160S

All **DME** HZ cylinders are fitted with magnets mounted on the piston to enable use of magnetic switches. Magnetic switches offer more straightforward installation than mechanical switches, simplifying setup and maintenance costs.

Pmax = 160 bar (for size 50 only 120 bar)
Tmax = 80° C (max working temperature)
Head + rear cushioning and air bleed
Max piston speed: Vmax = 0,7 - 0,8 m/s

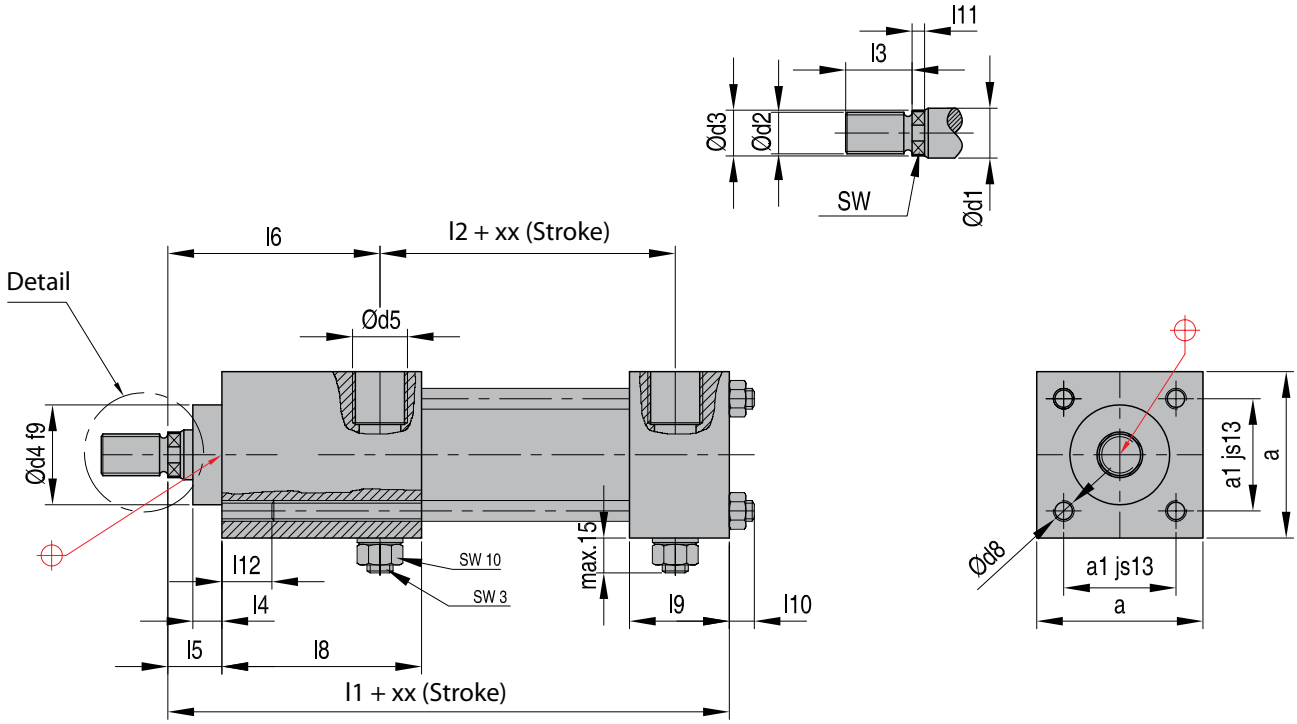

REF	d1	d2	d3	d4	d5	d8	l1	l2	l3	l4	l5	l6	l8	l9	l10	l11	l12	a	a1	SW	S
HZ160S-25-xx	12	M10x1,25	11	24	R1/4"	M5x0,80	114	51	14	7	15	51,0	48	24	8	5	12	40	28,3	10	16
HZ160S-32-xx	14	M12x1,25	13	26	R1/4"	M6x1,00	128	55	16	9	25	60,5	48	25	10	8	15	46	33,2	11	17
HZ160S-40-xx	18	M14x1,50	17	30	R3/8"	M8x1,00	153	68	18	8	25	63,0	53	37	12	6	20	60	41,7	15	20
HZ160S-50-xx	22	M16x1,50	21	34	R1/2"	M12x1,25	159	72	22	9	25	67,0	59	37	16	8	25	75	52,3	18	20

FD=thrust in kg FZ=traction force in kg	P bar												xx(Stroke)												
	80		90		100		120		125		160														
d	FD	FZ	FD	FZ	FD	FZ	FD	FZ	FD	FZ	FD	FZ	20	50	80	100	125	160	200	250	300	350	400	500	600
25	392	302	442	340	490	377	589	453	613	471	785	603	S	S	S	S	S	S	S	UR					
32	643	520	724	585	804	650	965	780	1005	812	1286	1040	S	S	S	S	S	S	S	UR	UR				
40	1004	800	1131	902	1256	1001	1508	1203	1570	1251	2009	1601	S	S	S	S	S	S	S	UR	UR	UR	UR		
50	1570	1265	1767	1425	1963	1582	2356	1900					S	S	S	S	S	S	S	UR	UR	UR	UR	UR	UR

S = Standard
UR = Upon request

HZ161U

Magnetic-switches for hydraulic cylinder HZ 160

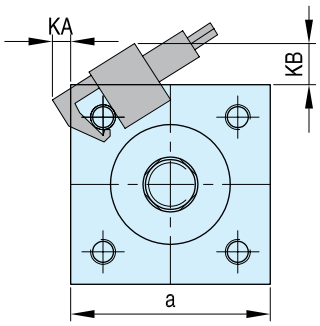

DME introduces the new "Universal" sensor HZ161U as replacement for the REED-switch HZ161U. The universal sensor combines the functionality of REED magnetic sensor with an inductive magnetic sensor, greatly reducing the interference caused by ferrous objects (such as steel mold plates). This gives more accurate readings than the old REED sensor.
Typically 2 sensors per cylinder; to be ordered seperately.

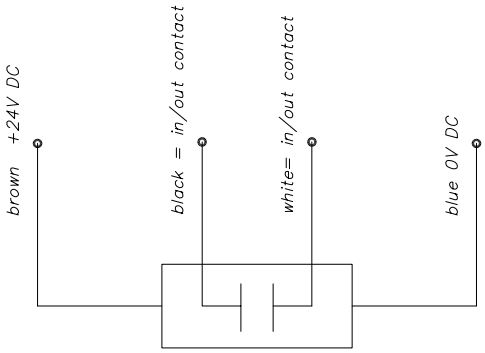

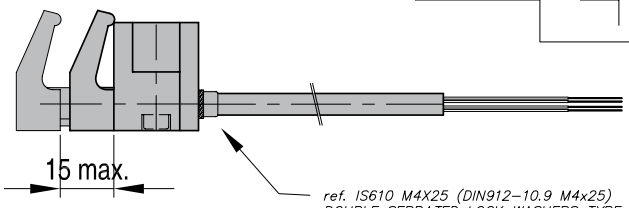

ref. IS610 M4X25 (DIN912–10.9 M4x25)
DOUBLE SERRATED LOCK WASHERS TYPE DD STEEL AND STEEL ZINC PLATED M4

REF
HZ161U

For	a	KA	KB
HZ160 25	40	9,2	23,2
HZ160 32	46	9	23,5
HZ160 40	60	8	21
HZ160 50	75	7,7	18,5

Technical specification	
Supply	24 VDC ± 10%
Protection	polarity inversion
Output	clean contact 0V
Max. switching voltage	125 VAC
Max. switching current	800 mA
Max. switching frequency	60 Hz
Max. switching power	20 W
Electric life at rated power (operations)	10,000,000
Hysteresis	±0,02 mm typical
24 volt disconnection delay	15 m sec.
Max. working temperature	+80° C - +176° F
Cable (Extraflex armoured + transp. PVC sheath)	mm Ø6 x 3000
Section wires	4x0,25 mm²
Serial signal connection	ok, max 6 switches
Switch type	magnet-resistive
Repeatability	> 0,05 mm.
ON minimum time	3 msec.
Max. flow speed	15 mt/sec.
Degree of protection against liquids	IP 67 (DIN 40050)
Dimensions	39x24x28 mm

Spare parts

HZ160 Spare parts

1. Rod end
2. Rod cartridge
3. Rod cartridge seals (kit)
4. Rod
5. Tube
6. Piston
7. Piston seals (kit)
8. Piston magnet (for magnetic cylinder)
9. Magnetic switch with bracket
10. Screw with locknut for cushion adjustment

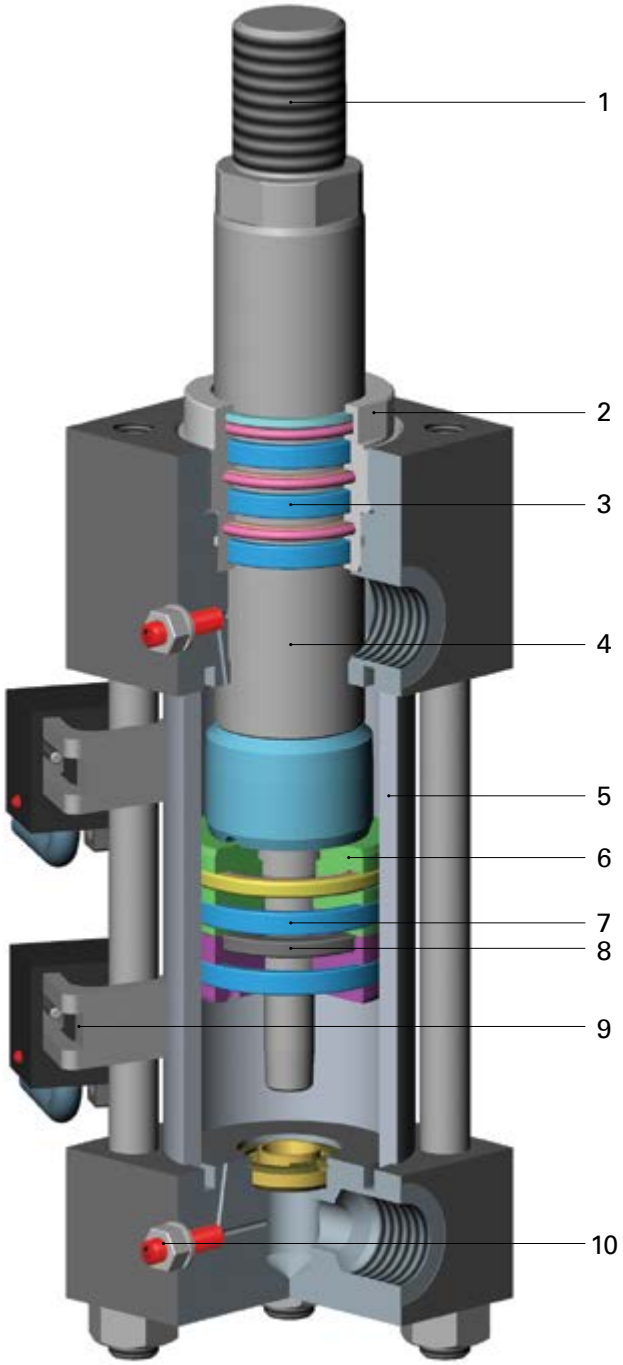

REF (3) ROD CARTRIDGE SEAL	FOR	REF (7) PISTON SEALS	FOR
V160-25-12-KITC	HZ160 25	V160-25-12-KITP	HZ160 25
V160-32-14-KITC	HZ160 32	V160-32-14-KITP	HZ160 32
V160-40-18-KITC	HZ160 40	V160-40-18-KITP	HZ160 40
V160-50-22-KITC	HZ160 50	V160-50-22-KITP	HZ160 50
V160-63-28-KITC	HZ160 63	V160-63-28-KITP	HZ160 63
V160-80-36-KITC	HZ160 80	V160-80-36-KITP	HZ160 80

HZ260

Hydraulic cylinder

All **DME** HZ cylinders are fitted with magnets mounted on the piston to enable use of magnetic switches. Magnetic switches offer more straightforward installation than mechanical switches, simplifying setup and maintenance costs.

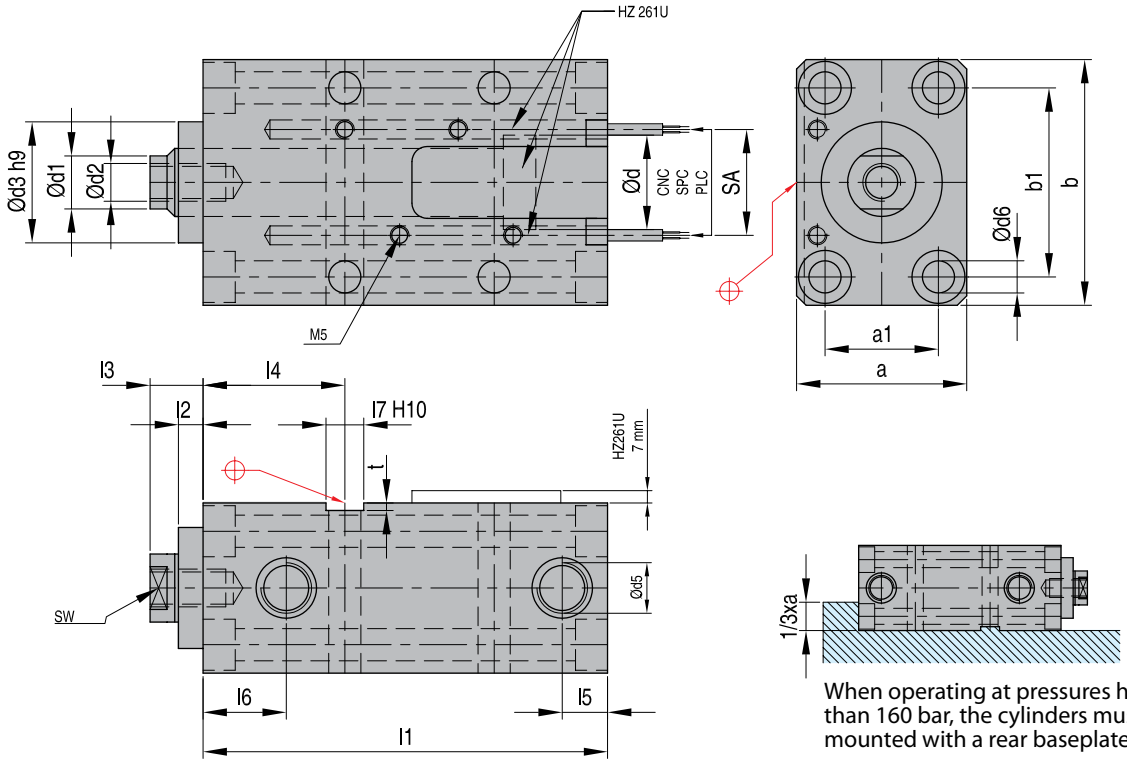

When operating at pressures higher than 160 bar, the cylinders must be mounted with a rear baseplate

						Stroke														
						20	50													
REF - d	d1	d2	d3	d5	d6	l1	l2	l2	l3	l4	l5	l6	l7	a	a1	b	b1	SW	t	SA
HZ260 25	18	M10	32	R1/4"	8,5	77	107	6,5	14	37	12	22	10	45	30	65	50	14	2	28
HZ260 32	22	M12	34	R1/4"	10,5	80	110	8	15	40	12	22	12	55	35	75	55	18	3	30
HZ260 40	22	M14	34	R1/4"	10,5	93	123	7	17	43	14	24	12	63	40	85	63	18	3	36
HZ260 50	28	M20	42	R1/4"	13	95	125	8	20	45	14,5	25	15	75	45	100	76	24	5	42

FD = thrust in kg FZ = traction force in kg	P bar											
	80		100		125		160		200		250	
d	FD	FZ	FD	FZ	FD	FZ	FD	FZ	FD	FZ	FD	FZ
25	392	189	491	236	613	295	785	378	981	473	1227	591
32	643	339	804	424	1005	530	1286	678	1608	848	2010	1060
40	1005	701	1256	876	1570	1095	2010	1402	2512	1752	3140	2190
50	1570	1078	1963	1347	2453	1684	3140	2155	3925	2694	4906	3388

Reed-switches for hydraulic cylinder HZ260

HZ261

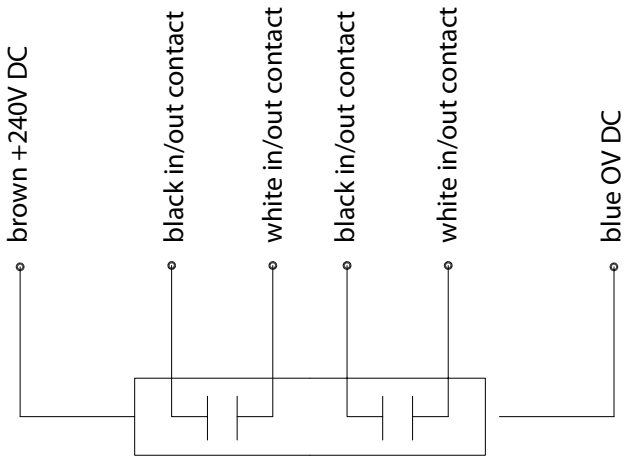

DME introduces this new "Universal" sensor as replacement for the REED-switch HZ261. The Universal sensor combines the functionality of REED magnetic sensor with an inductive magnetic sensor, greatly reducing the interference caused by ferrous objects (such as steel mold plates). This gives more accurate readings than the old REED sensor.

HZ261U is produced in 2 versions with different cable lengths between sensor and connection box. The table indicates the version suitable for each cylinder.

Bore Ø	Stroke	
	20 mm	50 mm
25	**HZ261 U1**	**HZ261 U1**
32	**HZ261 U1**	**HZ261 U1**
40	**HZ261 U1**	**HZ261 U2**
50	**HZ261 U1**	**HZ261 U2**
63	**HZ261 U2**	**HZ261 U2**
80	**HZ261 U2**	**HZ261 U2**
100	**HZ261 U2**	**HZ261U 2**

Technical Specifications	
Max switching voltage	125V AC
Max current (resistive load)	800 mA
Max switching power	300 W
Operating temperature	-20 - -> +80°C

HZ261

Interlocking cylinder

1. Rod seals (kit)
2. Rod cartridge
3. Rod
4. Piston
5. Piston seals (kit)
6. Piston magnet (for magnetic cylinder)
7. Body
8. Magnetic switch with screws (accessory)

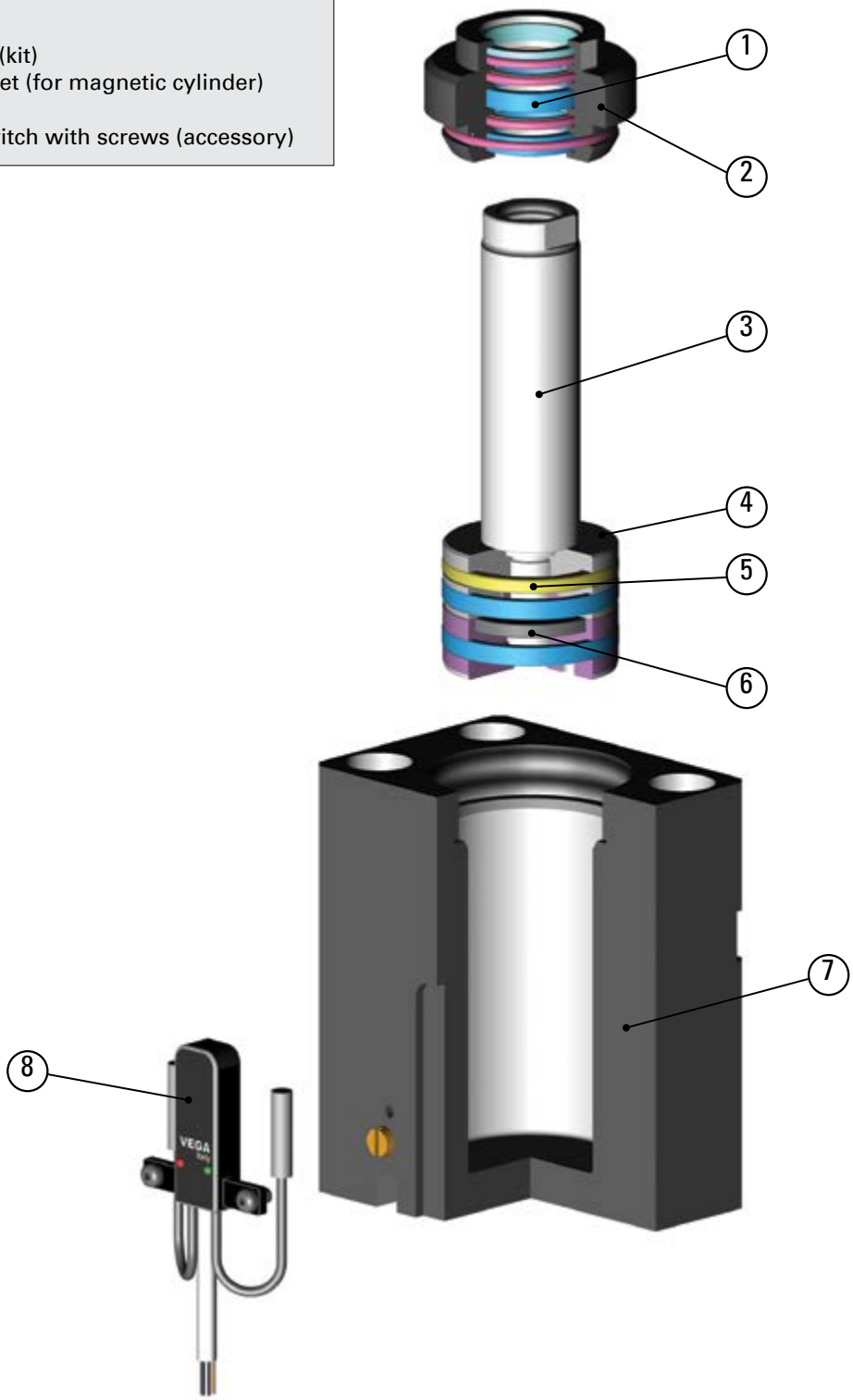

REF (1) Rod cartridge seals	FOR	REF (5) Piston seals	FOR
HZ262 25 G	HZ260 25	HZ262 25 K	HZ260 25
HZ262 32 G	HZ260 32	HZ262 32 K	HZ260 32
HZ262 40 G	HZ260 40	HZ262 40 K	HZ260 40
HZ262 50 G	HZ260 50	HZ262 50 K	HZ260 50

Interlocking cylinder

VZ1000

Interlocking cylinder
Stroke h = 10, 50, 100 mm
Special length on request.
The returnpipes must be unobstructed and vent directly to the tank.

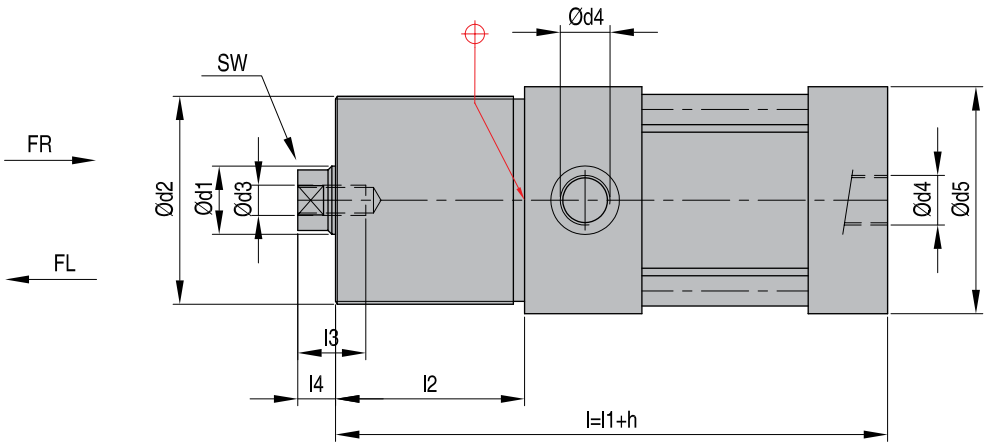

PISTON-ø d	Holding force {kN} Type HT	Stroke force {kN}/100 bar	Retraction force {kN}/100 bar
25	20	4,9	2,9
32	60	6,8	4,9
40	88	12,6	6,4
50	140	19,6	9,5
63	224	31,2	15,3
80	360	50,3	25,6
100	564	78,5	40,1
125	880	1222,7	59,1

REF piston ø	d1	d2	d3	d4	d5	l1	l2	l3	l4	SW
Vz1000 25	16	M55 x 2	M8	1/4"	60	140	50	18	10	14
Vz1000 32	20	M65 x 2	M10	1/4"	70	150	60	20	12	17
Vz1000 40	28	M85 x 2	M16	1/4"	95	150	70	25	15	22
Vz1000 50	36	M90 x 2	M20	3/8"	100	160	80	33	21	27
Vz1000 63	45	M110 x 2	M27	3/8"	120	187	90	41	25	36
Vz1000 80	56	M140 x 2	M30	1/2"	150	222	100	43	28	46
Vz1000 100	70	M160 x 3	M42	1/2"	170	248	110	45	33	55
Vz1000 125	90	M170 x 3	M56	3/4"	190	256	120	50	33	70

How to order (cylinder without sensor):

VZ1000 25 / h10 (10, 50, 100)
REF piston stroke

Info VZ 1000

Interlocking cylinder

Released position

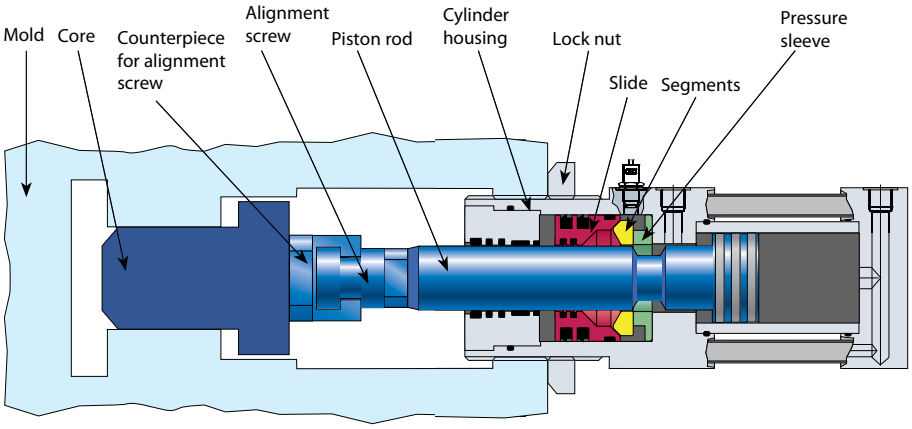

Start of locking

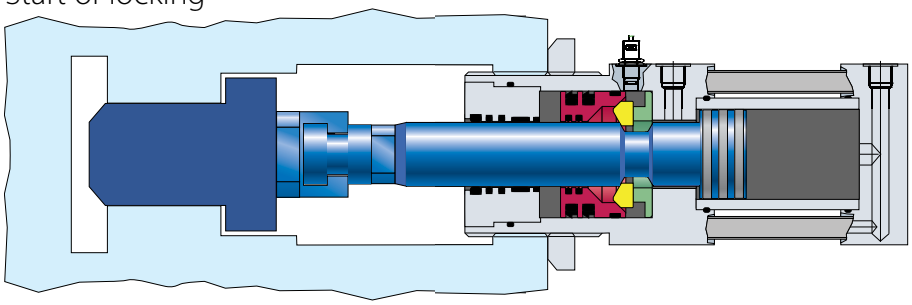

Completely locked position

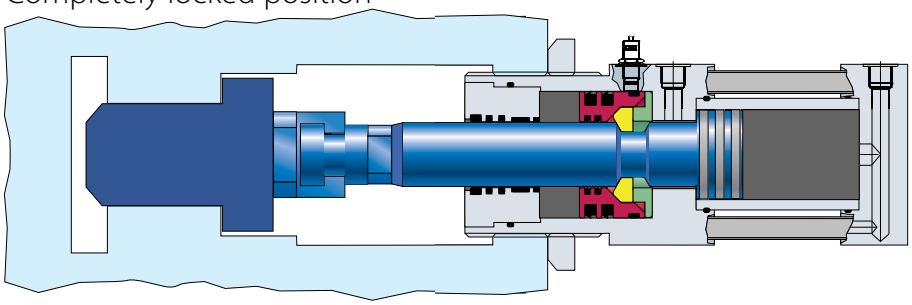

Locked position with applied injection pressure

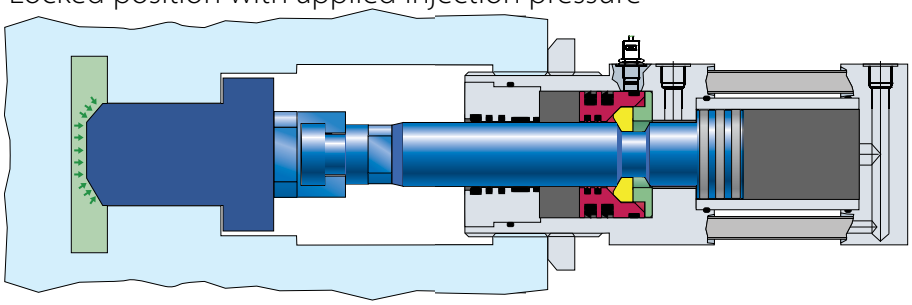

Functional process
VZ1000 double acting cylinders whose piston rod is extended by applying hydraulic pressure.
When the final position of the piston rod is reached the locking slide moves and presses the locking segments into the annular groove of the piston rod. The segments are fixed in radial and axial position, that means: the piston rod is positively locked.

The hydraulic pressure can be switched off. The retraction of the piston rod is operated by pressurising the rod sided piston surface. This counter pressure pushes the slide off its locking position and the segments move out of the annular groove while the piston rod retracts.
The slide is locked with spring operation and released hydraulically.

The piston rod always reaches one defined final position without the possibility to compensate tolerances or elasticities. The lock proceeds with positive lock without pre-load.

Interlocking cylinder

Info VZ1000

Inductive proximity switches enable the electronic sensing of the locked condition and core position respectively. The cylinders can be equipped with two sensors each.

Two types of inductive sensors are available:
- 3-wire DC PNP, positive switching
- 2-wire DC NAMUR in two designs each: with cable or with angled plug

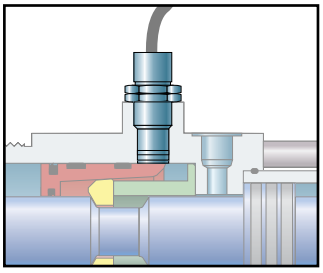

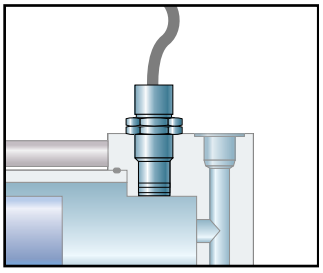

Core in - Piston rod extended and locked

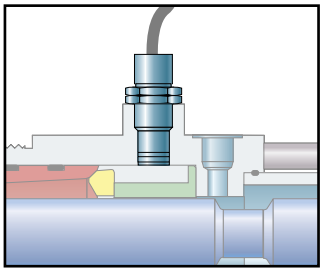

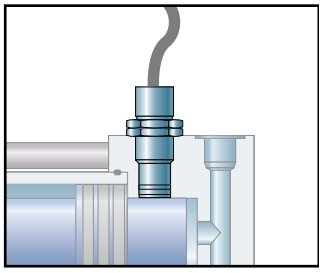

Core out - Piston rod retracted and unlocked

PNP Sensor
Three wires are connected directly with the machine. A direct voltage of 10 - 30 V is necessary

Technical data	
Admissible ambient temperature range:	up to +70°
Function of switching element:	PNP-norm. open (all series except B6) PNP-normally shut (only B6)
Operational voltage range:	10 ... 30 VDC
Protection class according to DIN 40050:	IP 67
Connection cable:	2m PVC-cable 3 x Ø 0,5mm²
Smallest allowed bending radius of cable:	50mm

NAMUR Sensor
The NAMUR sensor is designed to be used in hazardous areas and is "intrinsically safe". These sensors are wired to an amplifier (included in delivery together with the sensors) which is connected to the control panel of the moulding machine. Normally the sensors are driven with 230 V AC, optional amplifiers of 110 V AC and 24 V DC are also available.
Max. temperature: 70°C

Technical data	
Admissible ambient temperature range:	up to +70°
Function of switching element:	signal change (with connection to amplifier)
Operational voltage range:	10 ... 30 VDC
Protection class according to DIN 40050:	IP 67
Connection cable:	2m PVC-cable 2 x Ø 0,5mm²
Smallest allowed bending radius of cable:	50mm

How to order (cylinder with sensor):

VZ1000 25 / h10 (10, 50, 100) / B8

REF piston stroke sensor code

Info VZ 1000

Designation of switches and their indication function

Switching function	PNP		NAMUR		Indication function
	cable	ang. plug	cable	ang. plug	
normally shut	B6	-	B1	-	locking axial
normally open	B7	B27	B2	B22	end of stroke axial
normally open	B8	B28	B3	B23	locking radial
normally open	B9	B29	B4	B24	end of stroke radial

Possible combinations

	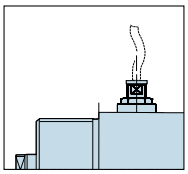 rod sided radial		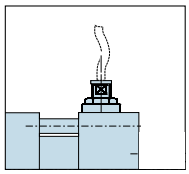 piston sided radial		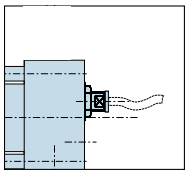 piston sided axial
PNP	B8 / B28	with	B9 / B29	or	B7 / B27
NAMUR	B3 / B23	with	B4 / B24	or	B2 / B22

Possible combinations

	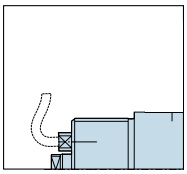 rod sided axial		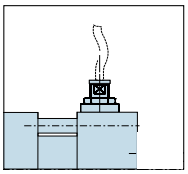 piston sided radial		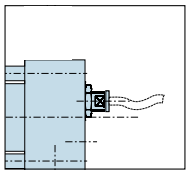 piston sided axial
PNP	B6	with	B9 / B29	or	B7 / B27
NAMUR	B1	with	B4 / B24	or	B2 / B22

Ordering advice:
Determine before ordering whether your application needs sensors for detecting the locking condition! (A retrofit is only possible with exchange of the cylinders housing parts)
Decide which position is required (locked, unlocked or both positions)
Decide on type of sensor (PNP or NAMUR)

For further information please contact **DME**

How to order (cylinder without sensor):

VZ1000 25 / h10 (10, 50, 100)
REF piston stroke

How to order (cylinder with sensor):

VZ1000 25 / h10 (10, 50, 100) / B6
REF piston stroke sensor code

Wiring diagram — 3-wire PNP

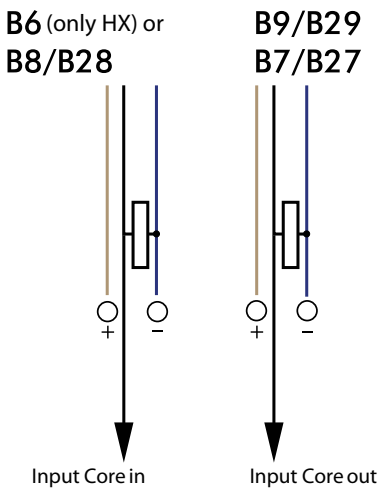

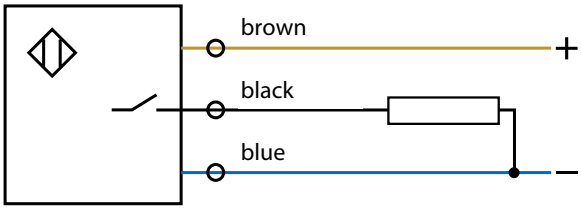

PNP Normally open (+) switching (all except B6)

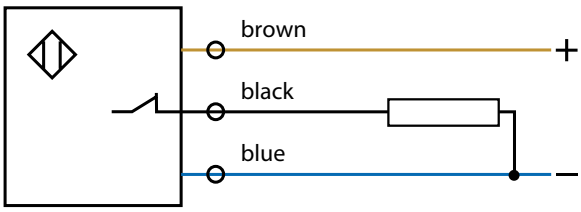

PNP Normally shut (+) switching (only B6)

Wiring diagram — 2-wire NAMUR

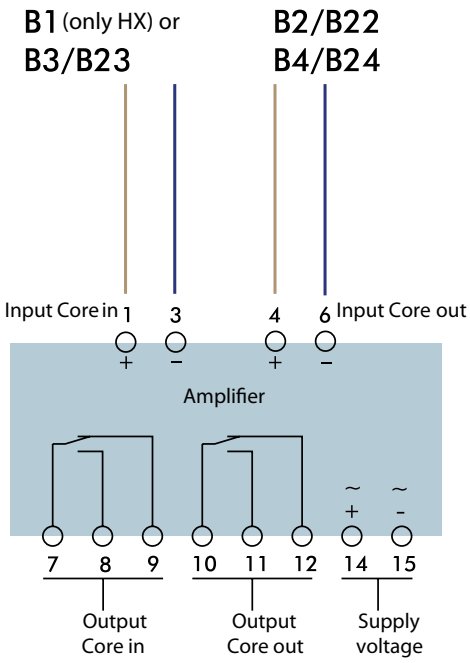

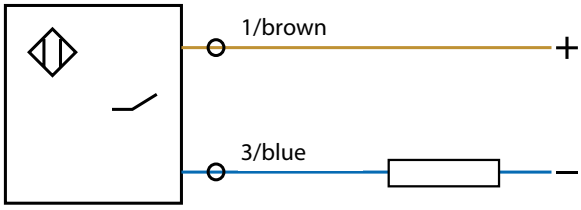

NAMUR signal change (connected to amplifier)

VZ1010

Adjusting screws

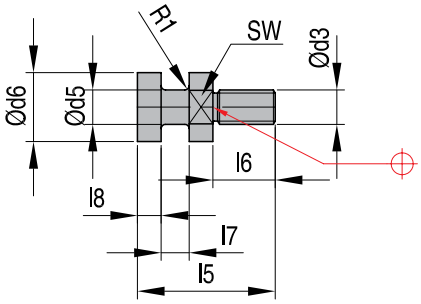

REF	M	d5	d6	l5	l6	l7	l8	r	SW	R
VZ1010 25	M8	8	16	32	14,5	6,5	5,5	1,0	14	320
VZ1010 32	M10	10	20	32	14,5	6,5	5,5	1,0	17	320
VZ1010 40	M16	16	25	40	20,0	7,0	6,0	1,0	22	400
VZ1010 50	M20	18	32	56	28,0	10,0	10,0	1,0	27	500
VZ1010 63	M27	24	40	75	39,0	13,0	12,0	1,5	36	630
VZ1010 80	M30	30	52	89	35,0	19,0	19,0	2,0	46	800
VZ1010 100	M42	40	65	115	40,0	25,0	25,0	2,0	55	1000
VZ1010 125	M56	55	80	135	45,0	30,0	30,0	2,0	70	1200

VZ1020

Mounting flanges

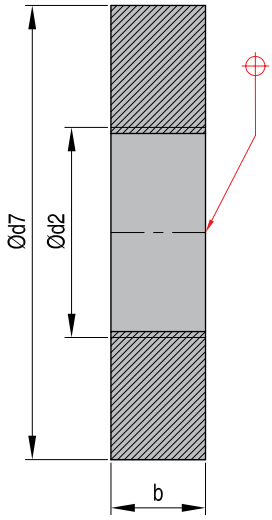

REF	M	d7	b
VZ1020 25	M55x2	120	25
VZ1020 32	M66x2	130	30
VZ1020 40	M85x2	150	30
VZ1020 50	M90x2	180	35
VZ1020 63	M110x2	210	40
VZ1020 80	M140x2	240	40
VZ1020 100	M160x3	290	45
VZ1020 125	M170x3	360	45

VZ1030

Groove nuts

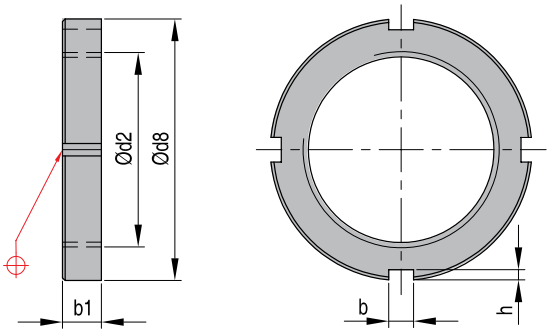

REF	M	d8	b1	b2	h
VZ1030 25	M55x2	75	11	7	3,0
VZ1030 32	M66x2	85	12	7	3,0
VZ1030 40	M85x2	110	16	8	3,5
VZ1030 50	M90x2	120	16	10	4,0
VZ1030 63	M110x2	145	19	12	5,0
VZ1030 80	M140x2	180	22	14	6,0
VZ1030 100	M160x3	210	25	16	7,0
VZ1030 125	M170x3	220	26	16	7,0