MILACRON®

Flexible Cores

Manufactured from spring steel this unit allows the release of small undercuts. It is activated by the ejector plates as a standard ejector. They come with a reference plane and a conical fixing system, which saves cutting the flexible core to fix it.

DME

Every step of the way

Info AW275

Flexible ejector (with mounting thread)

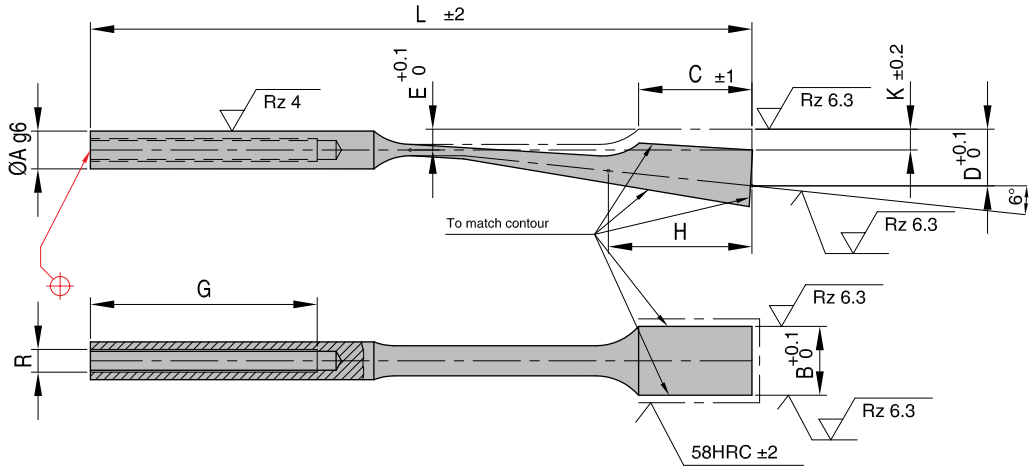

L = Length
G = Shoulder length + head thickness
Standard: DIN16756/ISO8405
Mat.: 1.8159 - 45 ±3 HRC
Max. Temp: 500-550 °C

REF A - B	C	D	E	G	H	K	L	R
AW275 06 - 6,2	22	9	3,5	15	25	3,5	125	M4
AW275 06 - 8,2	22	9	3,5	15	25	3,5	125	M4
AW275 08 - 8,2	25	11,5	4,5	15	30	4,5	140	M5
AW275 08 - 10,2	25	11,5	4,5	15	30	4,5	140	M5
AW275 08 - 12,2	25	11,5	4,5	15	30	4,5	140	M5
AW275 10 - 14,2	30	15	5,5	15	38	5,5	175	M6
AW275 10 - 16,2	30	15	5,5	15	38	5,5	175	M6
AW275 10 - 18,2	30	15	5,5	15	38	5,5	175	M6

Frequently Asked Questions (FAQ)

1 How many shots do the Flexible Cores stand?
As any mobile element, their lifetime depends essentially on their adjustment, as well as the tolerances used (which might be H7/g6). Flexible cores not being properly installed, may last a short period, but if they are installed as they should, they might produce more than 2 million pieces. Please, read our instructions for installation.

2 How is a Flexible Core correctly installed?
Please, carefully read the instructions for installation. Furthermore, we want to stress that it is very important to correctly calculate the Flexible Cores length. If this is machined shorter than its emplacement, once the Flexible Core gets attached to the ejector plates, the central part gets elongated, bringing weakness.

3 What would happen if the ejection stroke is more than C-dimension?
When the Flexible Core head goes free out of its emplacement, due to the rounded shaft and screw attachment, this is prone to twist. This torsionnal movement affects to the thinnest zone which could, after several shots, break. A solution is to use our Keyed Flexible Cores, which have a flat on the shaft that prevents the rotation to occur. You could also make a flat on the rear zone of the Flexible Core shaft yourself, placing a cotter pin to hold it.

Simple Ejection

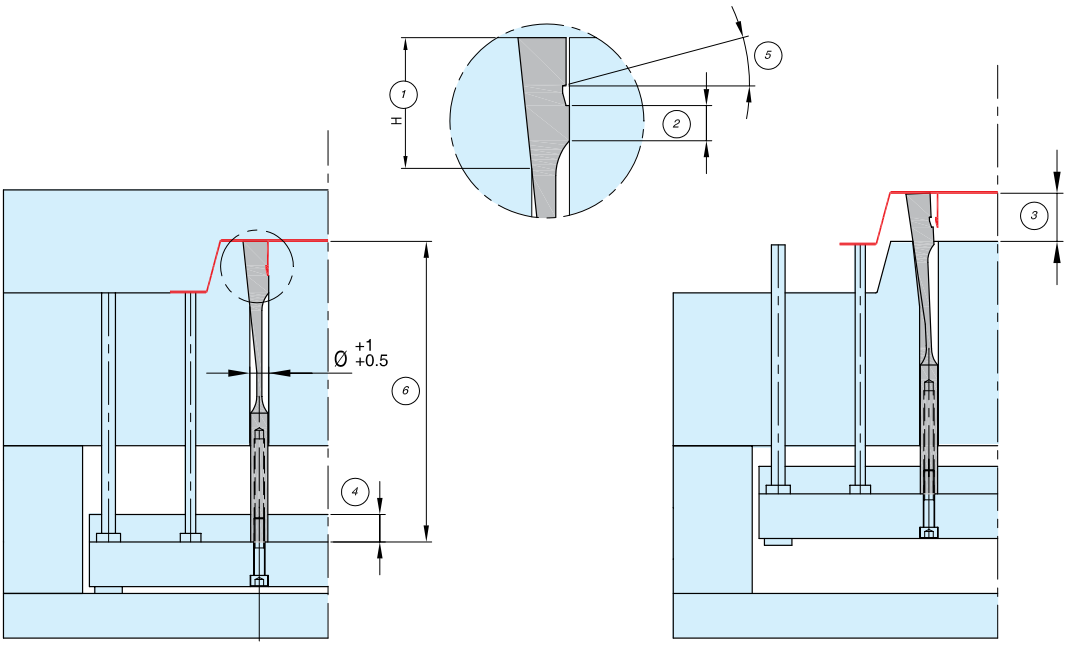

1. This area of support must be the same length as dimension H on the Sprung Core.
2. The adjustment area must be at least 1/3 of the dimension C.
3. The stroke of the sprung Core must be the same or smaller than the dimension C.
4. The plate that houses the shaft of the core must be minimum 15 mm in all cases.
5. The draft angle must be minimum 5°.
6. The core length must be 0,02-0,05 larger than its own hole.
7. After the core is adjusted, remove 0,1 to ensure smooth ejection.

General tolerance of adjustment H7/g6

Ejection With Double Plate

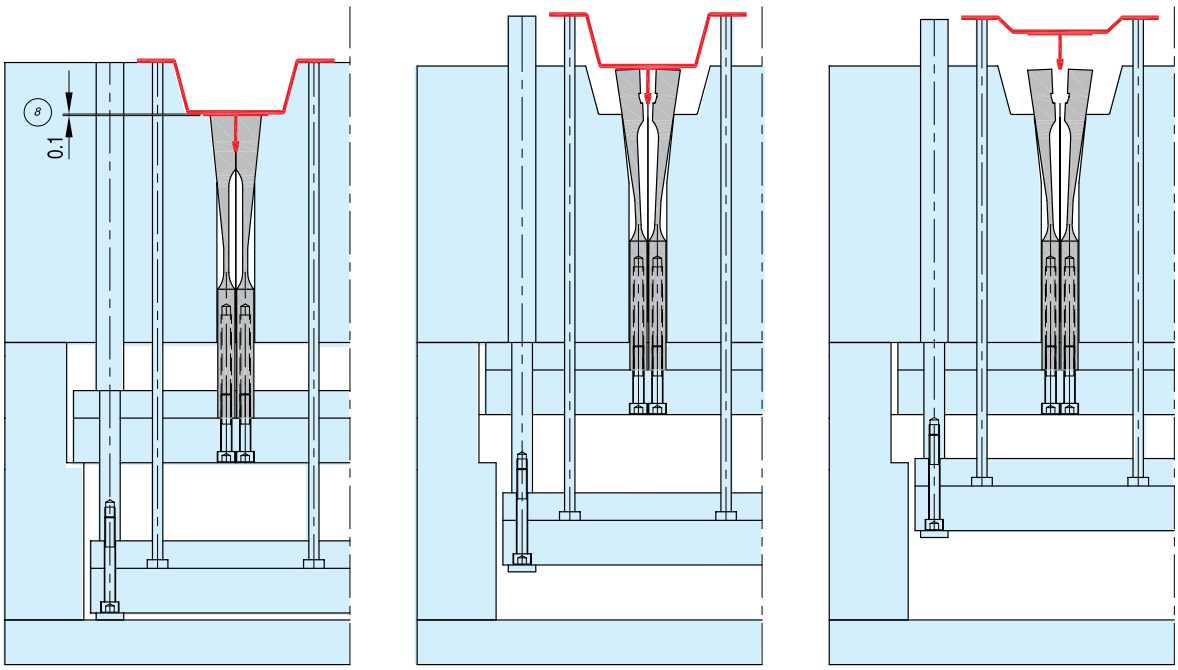

MILACRON®

Info AW280

Flexible ejector (with fixing key)

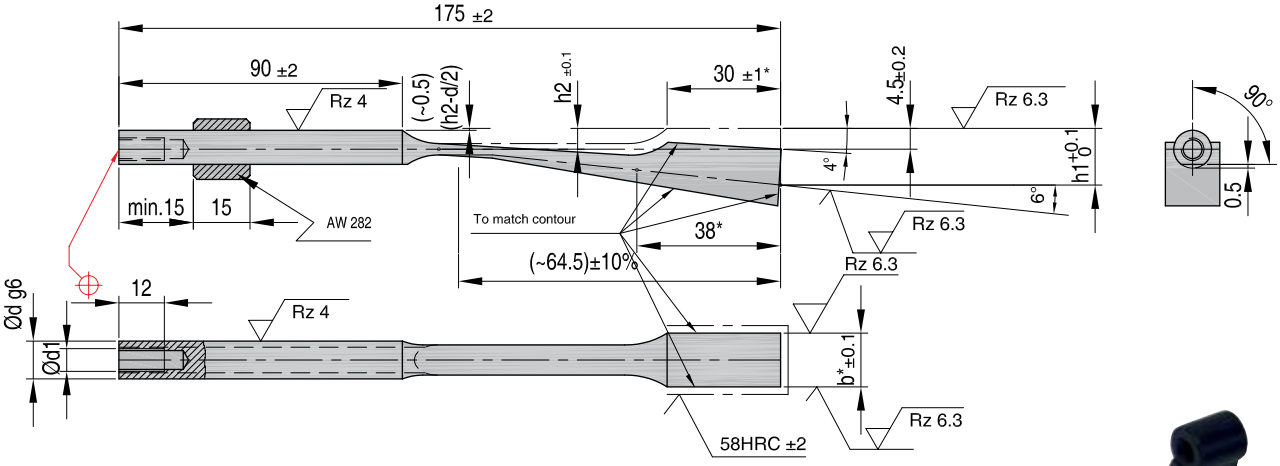

L = Length
G = Shoulder length + head thickness
Standard: DIN16756/ISO8405
Mat.: 1.8159 - 45 ±3 HRC

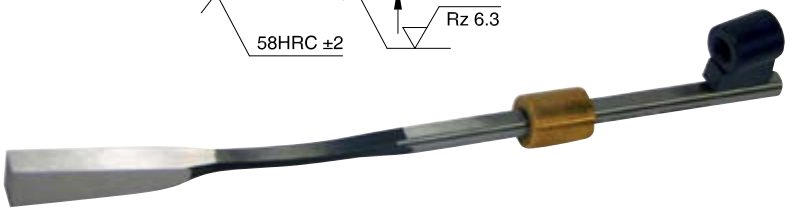

REF d - b*	d1	h1	h2	incl.	incl.
AW280 06 - 6,2	M4	10,0	3,5	AW282 06	AW281 06
AW280 06 - 8,2	M4	10,0	3,5	AW282 06	AW281 06
AW280 08 - 8,2	M5	11,2	4,5	AW282 08	AW281 11
AW280 08 - 12,2	M5	11,2	4,5	AW282 08	AW281 08
AW280 10 - 15,2	M6	13,6	5,5	AW282 10	AW281 10
AW280 10 - 18,2	M6	13,6	5,5	AW282 10	AW281 10

AW281

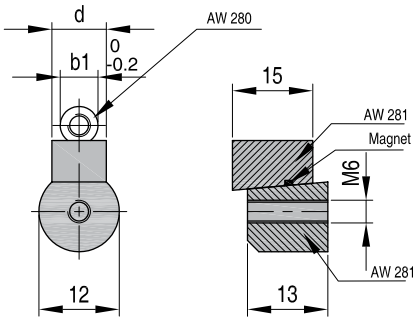

Mat.: 1.8159 - 45 ±3 HRC

REF d	b1	l3
AW281 06	6	13,5
AW281 08	8	14,5
AW281 10	10	15,5

AW282

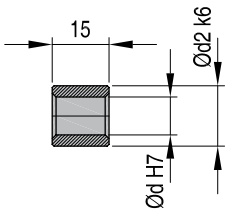

Mat.: Brons

REF d	d2
AW282 06	12
AW282 08	12
AW282 10	16

AW283

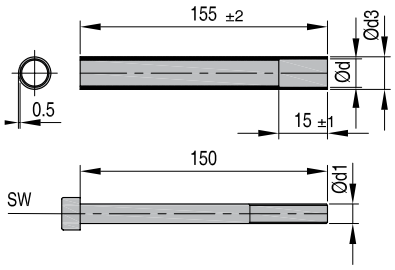

Mat.: 1.7225 - 50 ±3 HRC

REF d	d1	sw	d3	l4
AW283 06	M4	3	08	13,5
AW283 08	M5	4	10	14,5
AW283 10	M6	5	12	15,5

Installation Instructions

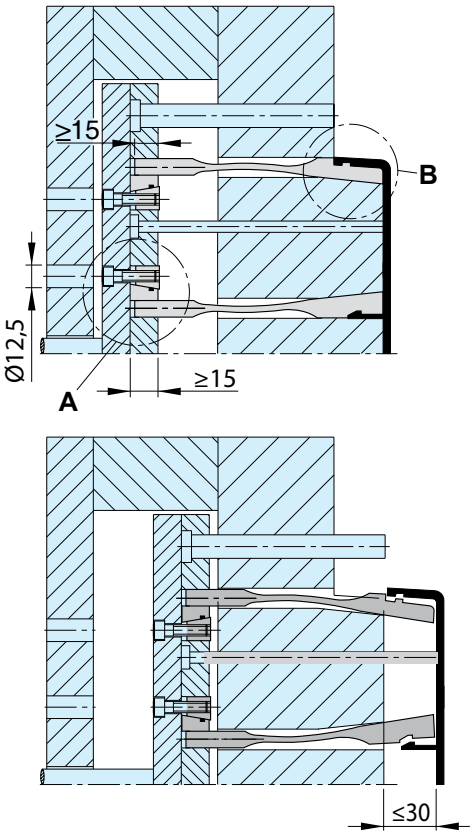

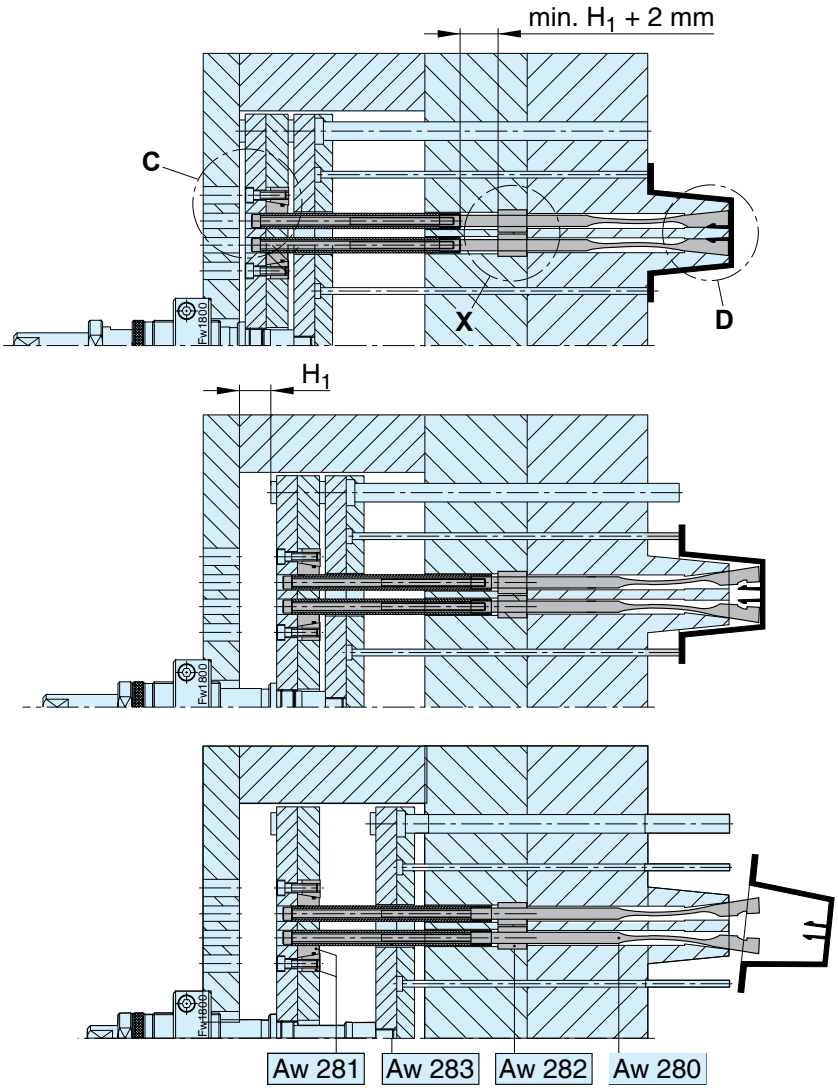

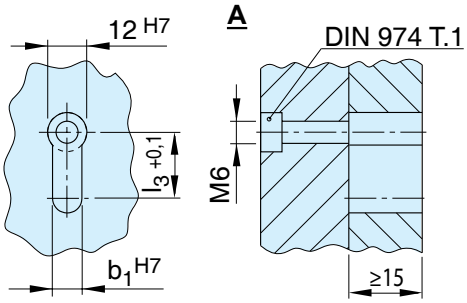

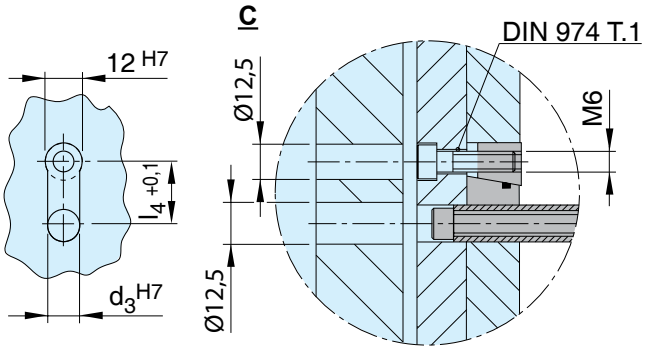

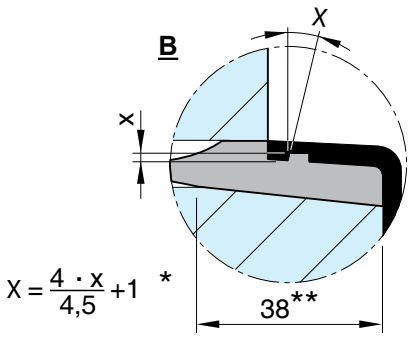

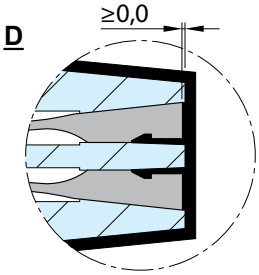

X

For large buckling lengths, please use guide bushes **AW 282**

* = Depending on surface roughness
** = To match the contour

1/10/2007

Special applications require perhaps deviations from the listed standard components **AW 275** and **AW 280**. Please fill your desired dimensions into the chart below. In order to maintain quality features (Service life tec.) the dependency of particular parameters in relation to eachother have to be observed. Agreement between customer and supplier in regard to dimensions or requirements (by example spring travel in relation to spring length) form the basis of well-performing parts.
Mat.: 1.8159 - 45 ±3 HRC

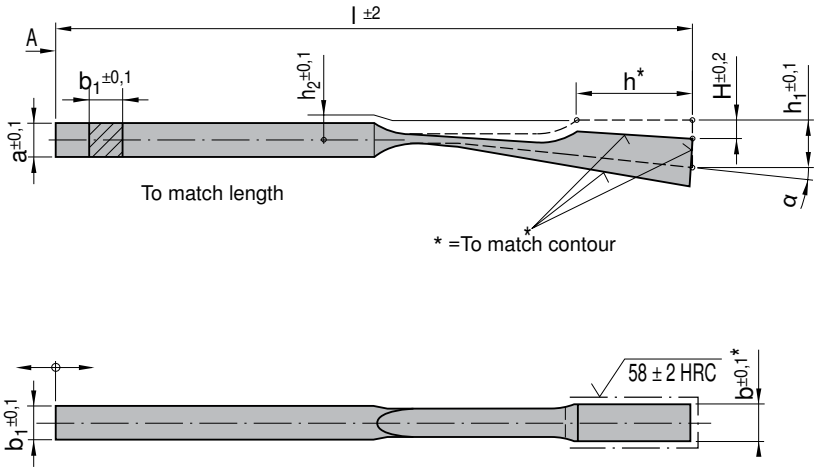

Step 1: Photocopy this form.

Step 2: Specify required tolerances on all dimensions.

Step 3: Contact **DME**

Item prefix	a	b	b1	h	h1	h2	H	l	⍰	Quantity	Delivery
AW285											

Special Ejectors

Comments:

.....

.....

.....

Company: .....

Contact:.....

Tel.:.....

Fax:.....

Quantity:.....

Mat.:.....

Hardness:..... HRC

Delivery date: .....

Nitrite: ☐Yes

Signature:.....

Order Number:.....

Flexicore® undercut releasing system

Info

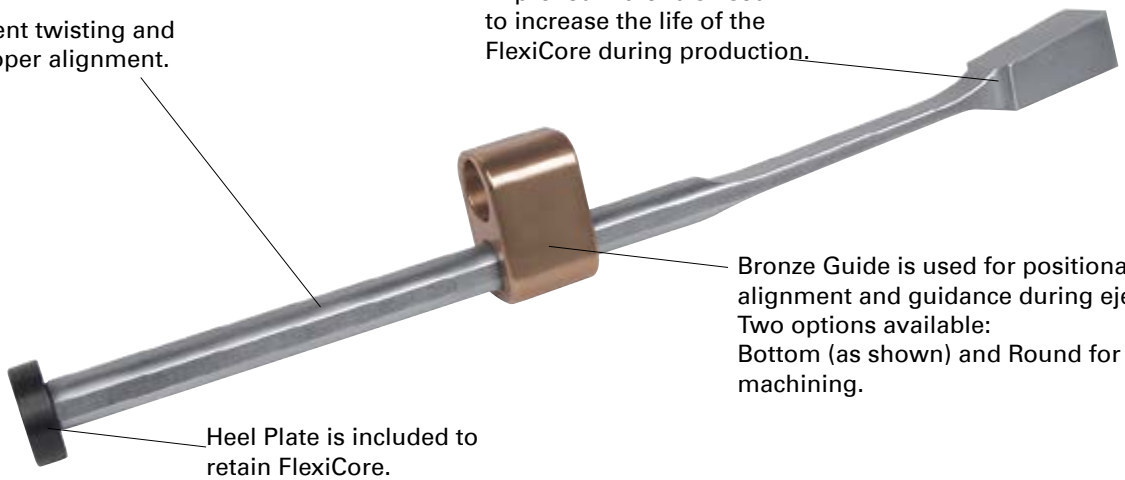

FlexiCore Assembly includes: FlexiCore, Bronze Guide (Bottom or Round), Heel Plate, and Flat Head Cap Screw.

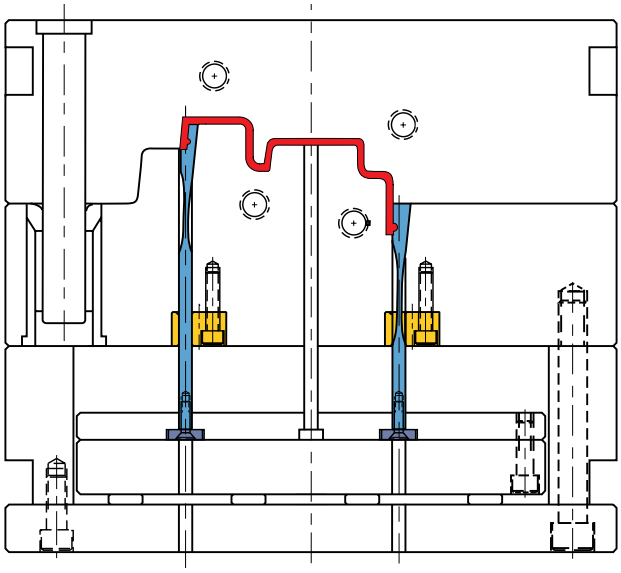

Mold closed

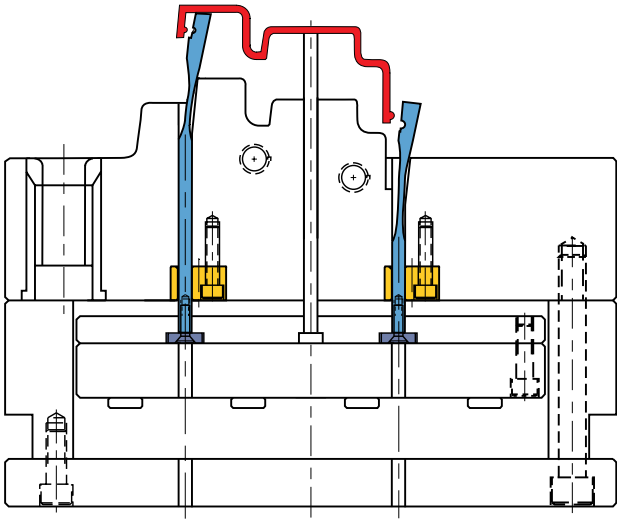

Mold open

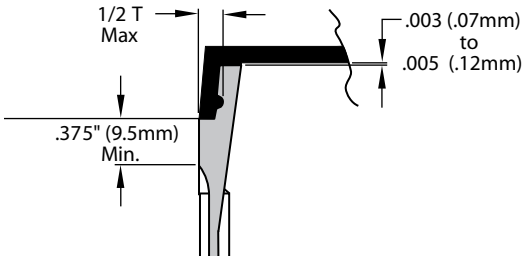

Application Guidelines:

The FlexiCore diameter (D) must be within the Guide prior to ejection as shown above.
Only surface treatments applied at low temperatures such as Electroless Nickel-based or chromium deposition treatments are permitted.
Maximum temperature is 125° C.
Please contact Engineering to review any designs if questions arise or if your application differs from the examples shown.

MILACRON®

FLXA

Flexicore® bottom guide assembly

FlexiCore: AISI 4340 with thin, dense Chromium treatment
Guide: CA954 Solid Bronze
Heel Plate: AISI 1018

Assemblies include: FlexiCore, Bottom Guide, Heel Plate, and Flat Head Cap Screw. Assembly components also sold individually.

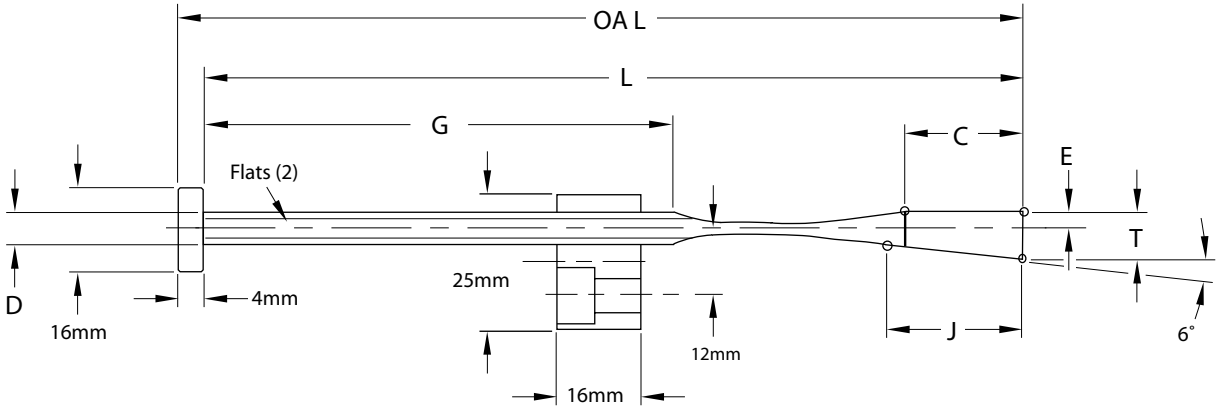

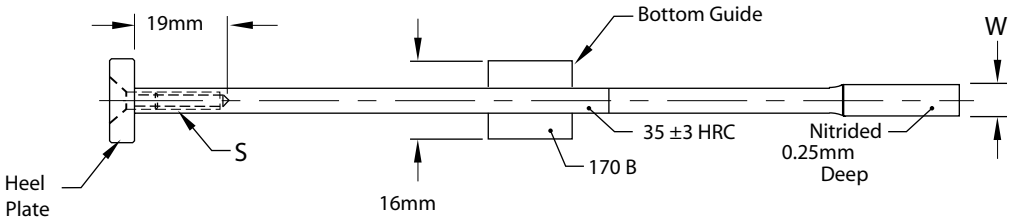

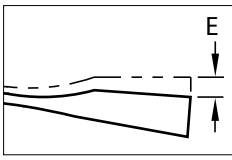

"E"= maximum travel at the top of the FlexiCore. Expected travel is reduced by the tangent of 6˚ along the "C" dimension.

REF	T +0,05 -0,00	W ±0,25 -0,00	L +0,25 -0,00	OAL REF	D +0,00 -0,25	C ±0,35	E	G +0,25 -0,00	J	S
FLXA9x6L160	9	6,2	162,5	166,5	5,94	22	3,5	88,6	24,3	M4-0,7x20
FLXA9x8L160	9	8,2	162,5	166,5	6,35	22	3,5	88,4	24,3	M4-0,7x20
FLXA11x10L200	11,5	10,2	200,0	204,0	7,92	26	4,5	111,2	26,0	M5-0,8x20
FLXA11x12L200	11,5	12,2	200,0	204,0	7,92	26	4,5	111,2	26,0	M5-0,8x20
FLXA12x14L200	12,5	14,2	200,0	204,0	7,92	30	4,5	107,2	28,5	M5-0,8x20
FLXA12x16L200	12,5	16,2	200,0	204,0	7,92	30	4,5	107,2	28,5	M5-0,8x20

Flexicore® double actuation

FLXDA

FlexiCore: AISI 4340 with thin, dense Chromium treatment
Guide: CA954 Solid Bronze
Heel Plate: AISI 1018

The double action bottom guide allows the FlexiCore System to be used to release boss details with undercuts. FlexiCore Double Assembly includes: two FlexiCores, one Bottom Guide, one Heel Plate, and two Low Head Cap Screws.

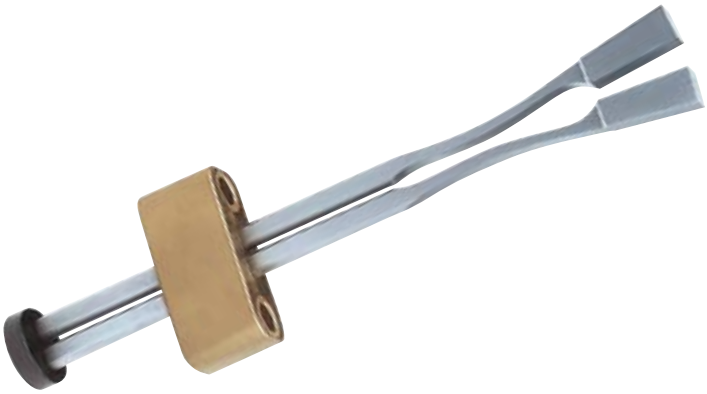

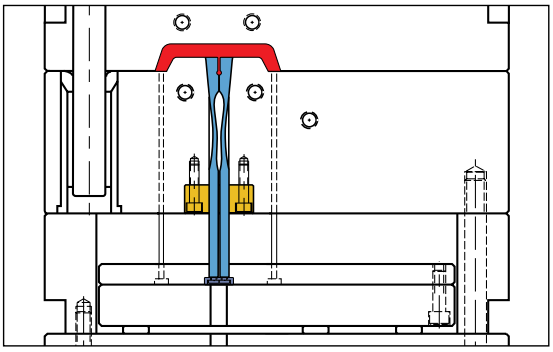

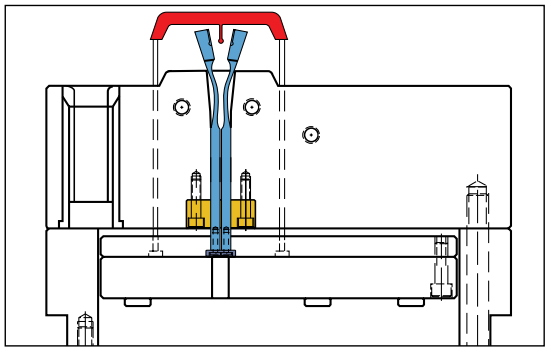

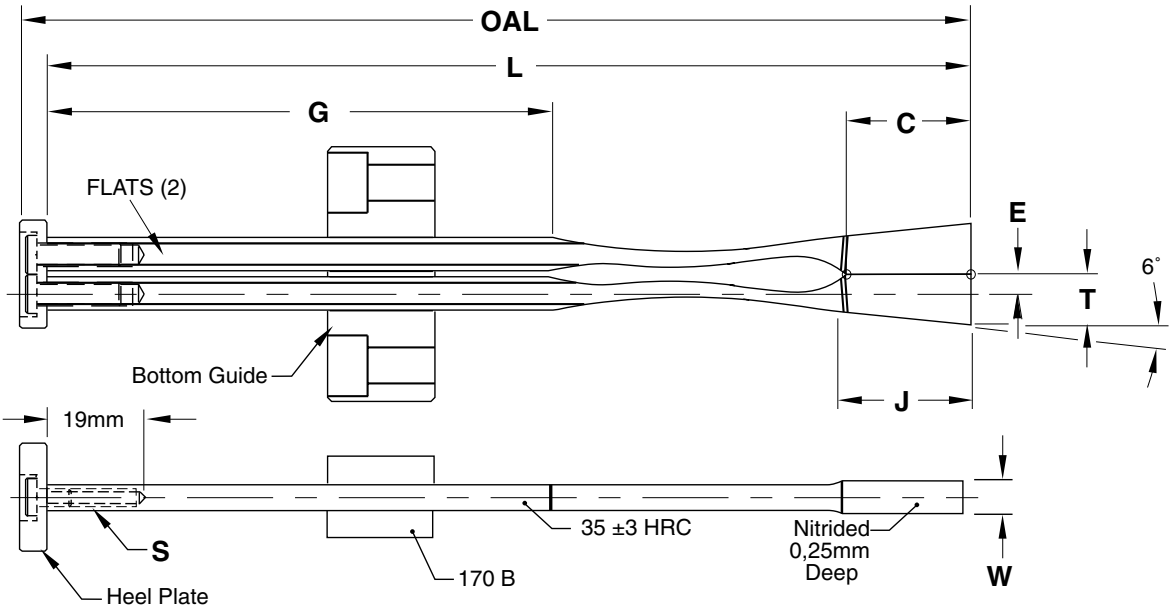

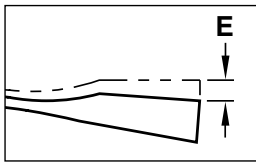

"E"= maximum travel at the top of the FlexiCore. Expected travel is reduced by the tangent of 6˚ along the "C" dimension.

REF	T +0,05 -0,00	W ±0,25 -0,00	L +0,25 -0,00	OAL REF	D +0,00 -0,25	C ±0,35	E	G +0,25 -0,00	J	S
FLXDA9x6L160	9	6,2	162,5	166,5	5,94	22	3,5	88,6	24,3	M4-0,7x20
FLXDA11x12L200	11,5	12,2	200,0	204,0	7,92	26	4,5	111,2	26,0	M5-0,8x20
FLXDA12x14L200	12,5	14,2	200,0	204,0	7,92	30	4,5	107,2	28,5	M5-0,8x20
FLXDA12x16L200	12,5	16,2	200,0	204,0	7,92	30	4,5	107,2	28,5	M5-0,8x20

FLXWBM

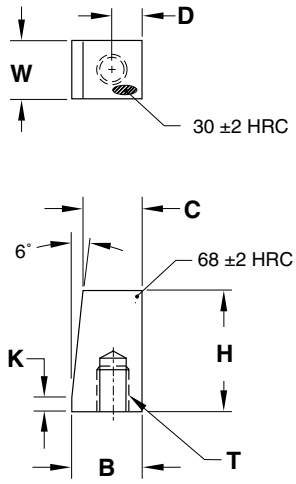

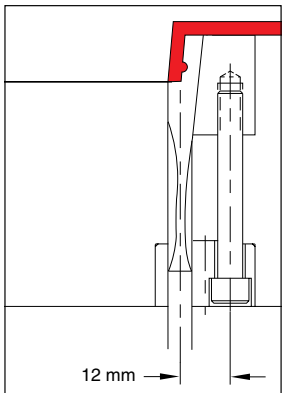

The Wear Block installs from parting line, utilizing the same screw hole location as the bottom guide.

Wear blocks

Mat.: P-20 Pre-Hard, Nitrided

REF	W +0,05 -0,00	D ±0,25	B +0,25 -0,00	C +0,25 -0,00	H	K	T Thread
FLXWBM-6	6,2	7,2	15,9	13,55	25,4	2,9	M5-0,8
FLXWBM-8	8,2	7,2	15,9	13,55	25,4	2,9	M6-1,0
FLXWBM-10	10,2	7,2	14,4	12,05	25,4	2,9	M6-1,0
FLXWBM-12	12,2	7,2	14,4	12,05	25,4	2,9	M6-1,0
FLXWBM-14	14,2	7,2	15,2	12,11	33,2	3,5	M6-1,0
FLXWBM-16	16,2	7,2	15,2	12,11	33,2	3,5	M6-1,0

FLXXM

Extensions

Mat.: 4140 Pre-Hard

REF	L (mm) +0,25 -0,00	D +0,00 -0,12	B	A
FLXXM4L50	50	6	M4-0,7	4,8
FLXXM4L100	100	6	M4-0,7	4,8
FLXXM5L50	50	8	M5-0,8	6,3
FLXXM5L100	100	8	M5-0,8	6,3

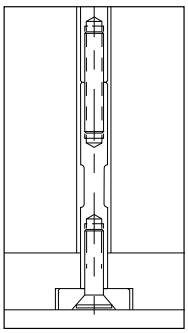

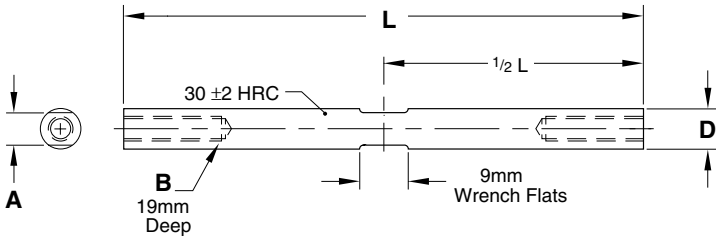

FLXBG - FLXRG

Replacement guides

Mat.: CA954 Solid Bronze

FLXBG

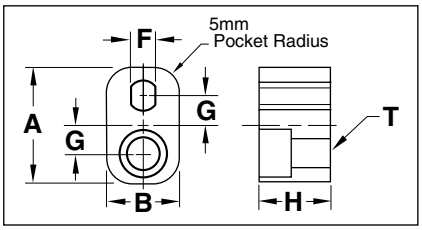

REF	A	B	H	F	G	T
FLXBG-6	25	16	16	4,8	6	M5-SBLT
FLXBG-8	25	16	16	5,0	6	M6-1
FLXBG-10	25	16	16	7,3	6	M6-1

FLXRG

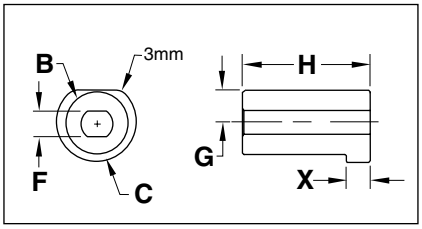

REF	B	C	H	F	X	G
FLXRG-6	12	16	25	4,8	5	6
FLXRG-8	12	16	25	5,0	5	6
FLXRG-10	16	20	25	7,3	5	8

Replacement heel plates

Mat.: AISI 1018 Black Oxided

FLXHP

REF	K	P	S
FLXHP-4	16	4	M4-0,7
FLXHP-5	16	4	M5-0,8

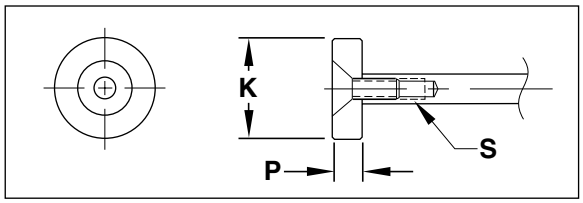

Screw included.

Replacement guides: double actuation

Mat.: CA954 Solid Bronze

FLXDBG

REF	A	B	H	F	G	R	S	T
FLXDBG-6	45	16	20	1,8	3,5	5	16,2	M6-1
FLXDBG-12	48	16	20	7,3	4,5	5	17,2	M6-1

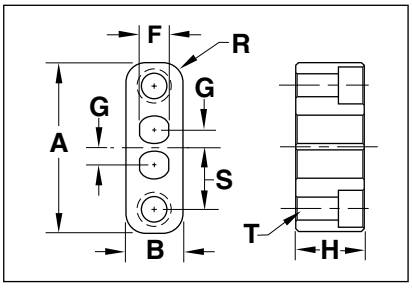

Replacement heel plates: double actuation

Mat.: AISI 1018 Black Oxided

FLXDHP

REF	C	K	P	S
FLXDHP-4	7	20	6	M4-0,7
FLXDHP-5	9	22	6	M5-0,8

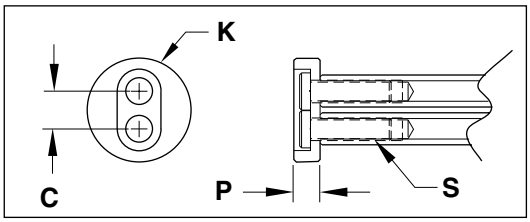

Screws included.