MILACRON®

Pre-engineered Components

DME

Every step of the way

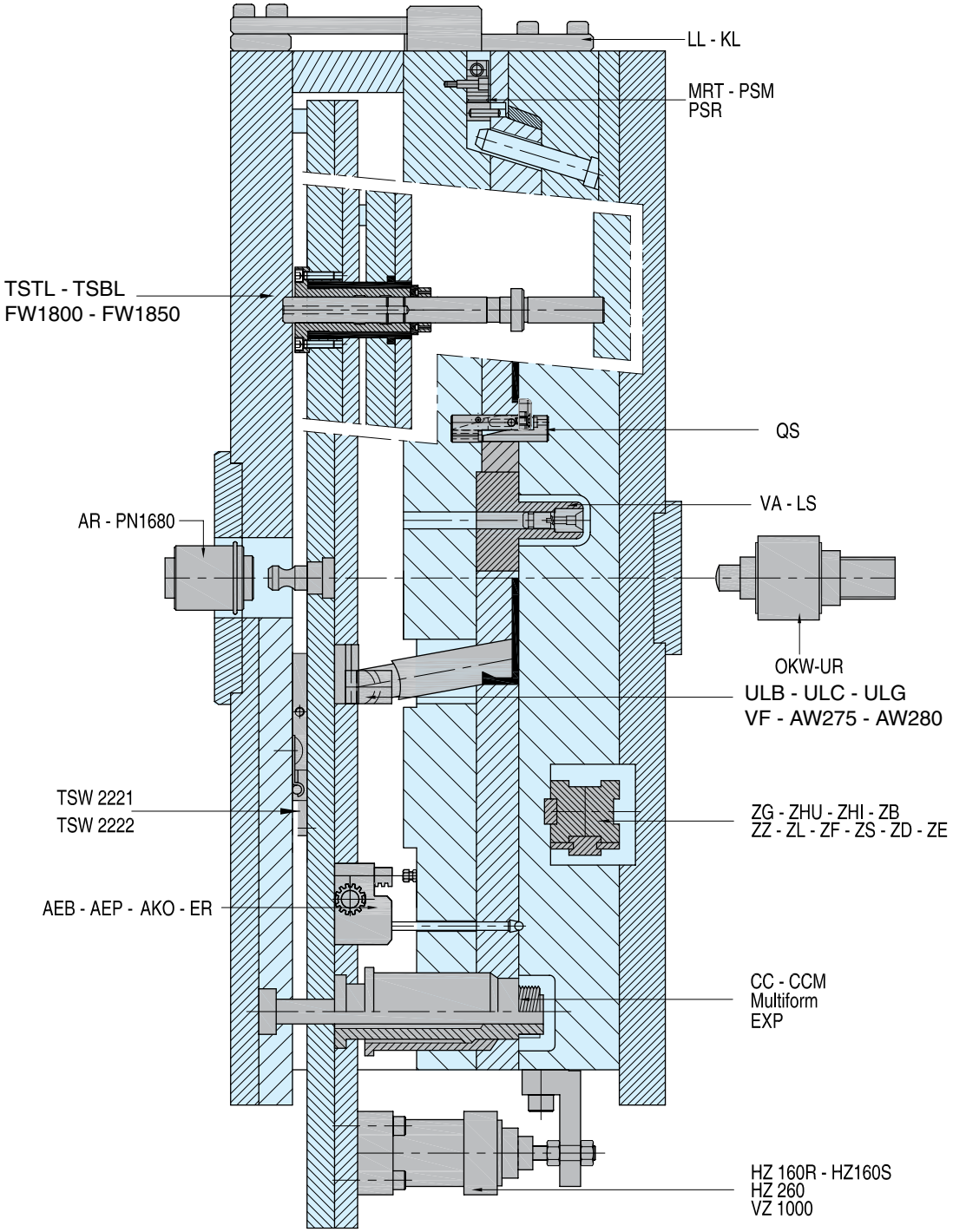
LL - KL
MRT - PSM
PSR
TSTL - TSBL
FW1800 - FW1850
QS
VA - LS
AR - PN1680
OKW-UR
ULB - ULC - ULG
VF - AW275 - AW280
TSW 2221
TSW 2222
ZG - ZHU - ZHI - ZB
ZZ - ZL - ZF - ZS - ZD - ZE
AEB - AEP - AKO - ER
CC - CCM
Multiform
EXP
HZ 160R - HZ160S
HZ 260
VZ 1000

Plate Control

Latch Locks 253
2-stage Ejectors 277
Coarse Pitch Axles 291
Helical Gear 298
Ejection Control 302
Slide Retainers 308
Friction Pullers 313

Molding Undercuts

Molding Undercuts 314
Vectorform 317
UniLifter 324
Flexible Cores 327
Collapsible Cores 339
Expandables Cavities 346
DT Collapsible Cores 348
Expandable Cores 350
Unscrewing Device 354

Other Technical Solutions

Quick Ejector Couplings 366
Air Valves 368
Machine Filter Nozzle 370
Thinswitch Limit Switch 372
CounterView 376
Hydraulic Cylinders 378
Bakra Quick-action Clamping System 491

MILACRON®

Plate Control

DME

Every step of the way

Info: LL-KL-DKL

Latch Locks are used to control and float plates during the mold opening and closing sequence.
With three different types, **DME** provides a range of installation solutions for all applications:

1. LL: the original **DME** latch lock, successfully used in the field for almost 20 years.
A simple, compact design which can be mounted in various configurations on the outside of the mold.
Available in small, medium and large in one standard length which is easily cut to size by the toolmaker.

2. KL: very sturdy construction available in 6 different sizes to handle any mold dimension.
Simple machining and adjustment allow easy mounting to the outside of the mold.

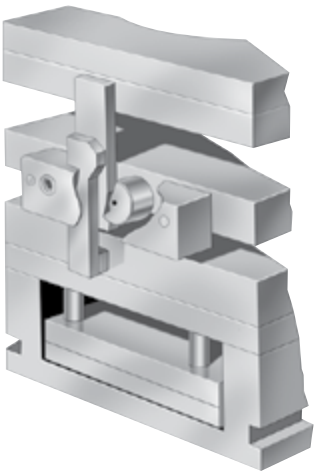

3. DKL: the modern alternative launched in 2004 and hugely popular with mold designers, builders and injectors.
Completely contained inside the mold, DKL does not interfere with external cooling lines and no longer prevents mold being placed on its side.
Greatly simplifies mold-making as plates no longer need side-machining, only vertical machining. Optional guided ejection saves space in the mold.

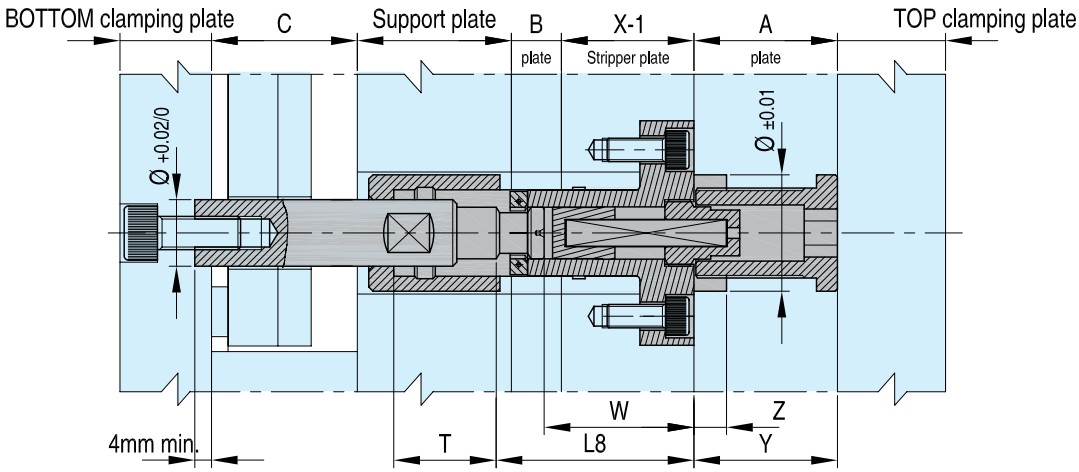

Info LL

Jiffy Latch Lock

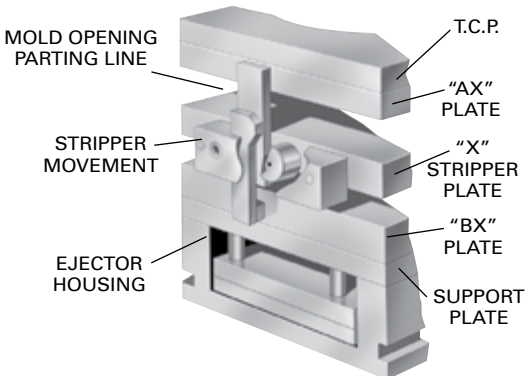

1. To control stripper plate.
Cycle time is often wasted waiting for the press knock-out bar to function. With the application of the **DME** Jiffy Latch-Lok, as illustrated to the left, the stripper plate is moved in a secondary action of the mold opening without the aid of the press knock-out bar.
The Jiffy Latch-Lok permits you to shorten the ejection stroke, improve cycle time and increase the number of parts per shift.

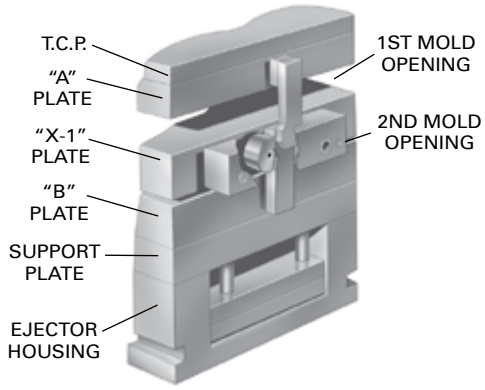

2. To float X-plate away from A-plate while locking X- and B- plates.
In this application of the Jiffy Latch-Lok, the "X-1" plate is floated away from the "A" plate in the first mold opening sequence. At a predetermined opening (you determine the distance) the "X-1" plate is released from the "B" plate for the second mold opening. This application of the Jiffy Latch-Lok is particularly effective on "AX" or three-plate top runner molds.

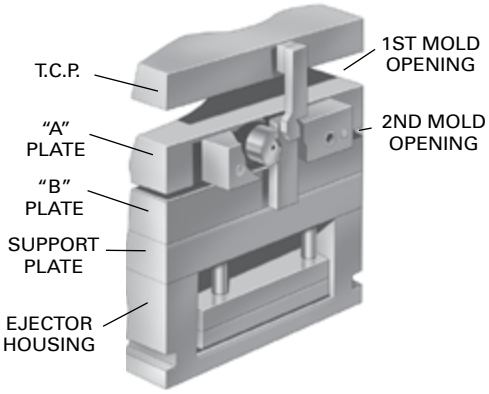

3. To float A-plate away from top clamping plate while locking A- and B-plates.
In the **DME** Latch-Lok application illustrated here, the "A" plate moves away from the top clamp plate in the first mold opening. During this portion of the cycle, the "A" and "B" plates are locked. As the release bar passes the rocker, the "A" and "B" plates part in the second mold opening.

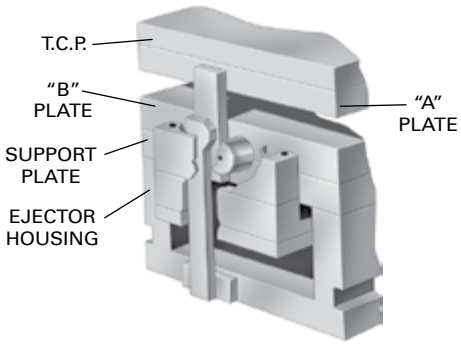

4. Actuation of ejector assembly without aid of press knock-out bar.
For those mold applications where a shorter press stroke is required, the **DME** Jiffy Latch-Lok is extremely effective.
You can activate the Jiffy Latch-Lok at any time after the mold begins to open, and pull the ejector assembly forward. This simple action shortens cycle time and increases part production.

Jiffy Latch Lock

LL

REF	W = MOLD WIDTH
LL 051 E	W <= 200
LL 101 E	200 < W < 400
LL 151	200 < W < 400
LL 201	W > 400

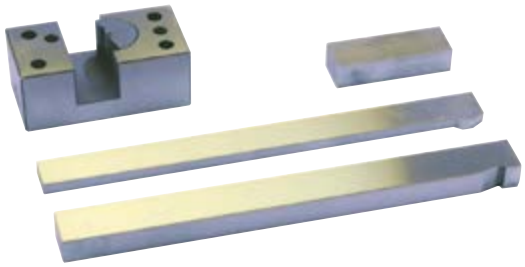

Body

LL

A	B	C	Rocker Ø	Spring	For REF
80,0	35,0	25,0	**LL 052 E:** 22	**LL 059 E**	**LL 051 E**
127,0	47,0	37,0	**LL 102 E:** 32	**LL 109 E**	**LL 101 E**
127,0	49,2	36,5	**LL 102:** 31,2	**LL 109**	**LL 151**
152,5	74,6	61,9	**LL 202:** 50,2	**LL 209**	**LL 201**

Body

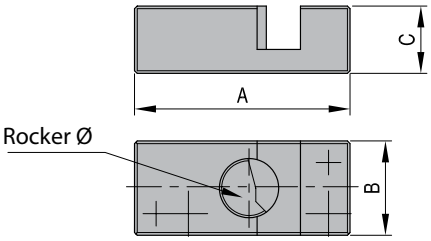

Latch bar

LL

REF	E	F	G2	For REF
LL 053 E	180	7,9	16,0	**LL 051 E**
LL 103 E	254	11,9	24,0	**LL 101 E**
LL 153	254	12,1	24,8	**LL 151**
LL 203	406	24,8	37,5	**LL 201**

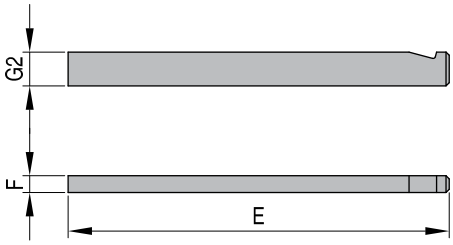

Release bar

LL

REF	M	P	Q	For REF
LL 054 E	180	7,9	16,0	**LL 051 E**
LL 104 E	254	9,9	24,0	**LL 101 E**
LL 104	254	9,0	24,8	**LL 151**
LL 204	406	12,1	37,5	**LL 201**

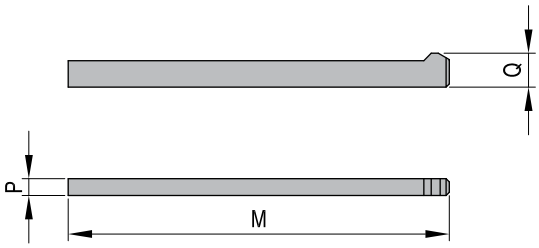

Spacer

LL

REF	U	V	W	For REF
LL 056 E	55,0	8,0	12,0	**LL 051 E**
LL 106 E	75,0	12,0	20,0	**LL 101 E**
LL 106	76,2	12,4	22,2	**LL 151**
LL 206	114,3	25,3	38,1	**LL 201**

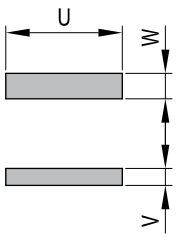

Jiffy

Installation instructions LL-051 / LL-101 / LL-201

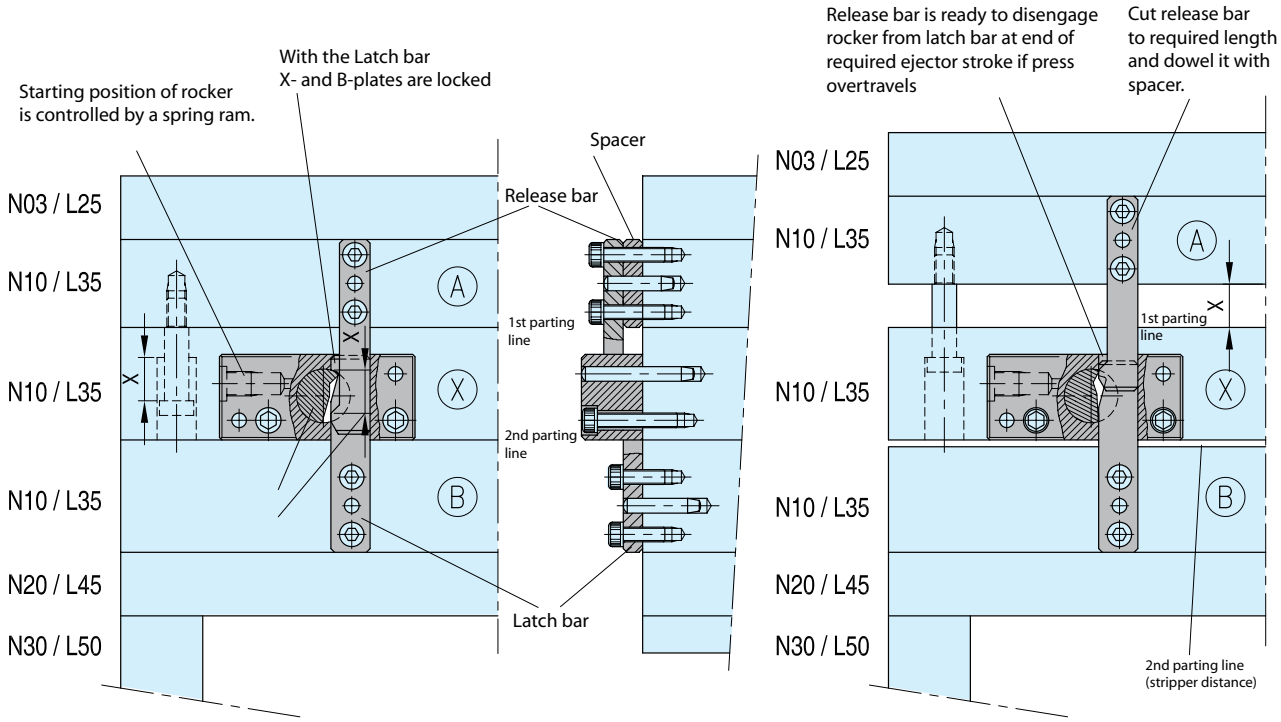

For one mold at least 2 Latch-loks are required, which are respectively mounted at outer surfaces (center of the mold).
Body must be parallel screwed and doweled at the molding plate. Latch and release bars must be screwed at 90° to the parting line (Slotted holes facilitate final adjustment). The bars have to slide properly in the body.

Adjustment:
Both Latch-loks must be accurately adjusted. Inaccuracies can lead to canting of stripper plates and to breaking of the bars.
Latch bars and release bars must be preset when the mold is closed. Open mold and check motion sequence of bars and stripper plate. Fine tuning is necessary. Repeat this procedure until both Latch-loks work together exactly. Then latch bar and release bar can be doweled. Before and during operation apply to all moving parts of the Latch-lok C 168 type grease.

Installation instructions LL-151

Jiffy

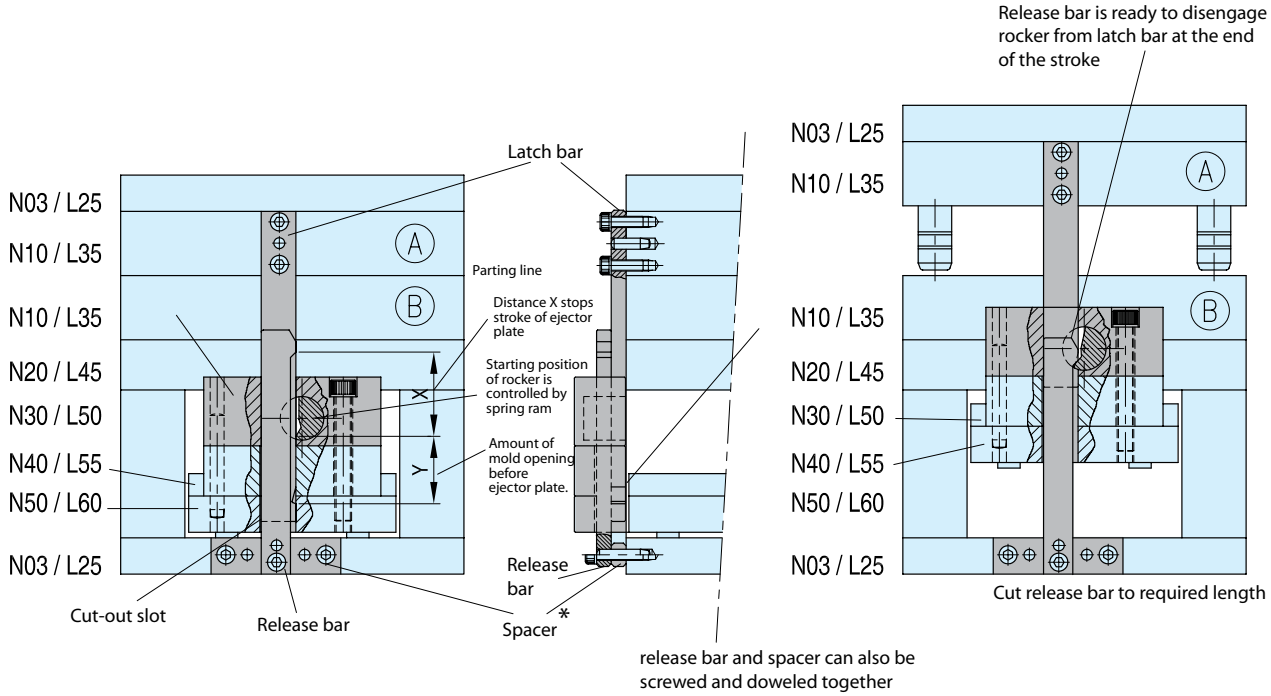

With Latch-lok LL-151 especially the ejector plate is moved, ejector plate (N 50) has to overhang enough, so that body and, if necessary spacer* could be mounted. Body and spacer are to be screwed and doweled with N 50. Machine cut-out slot for bars in spacer* and overhanging ejector plates.
All other installation instructions as described on LL-051, LL-101 and LL-201.

External Latch Lock

Positive and Precise Positioning of Floating Plates

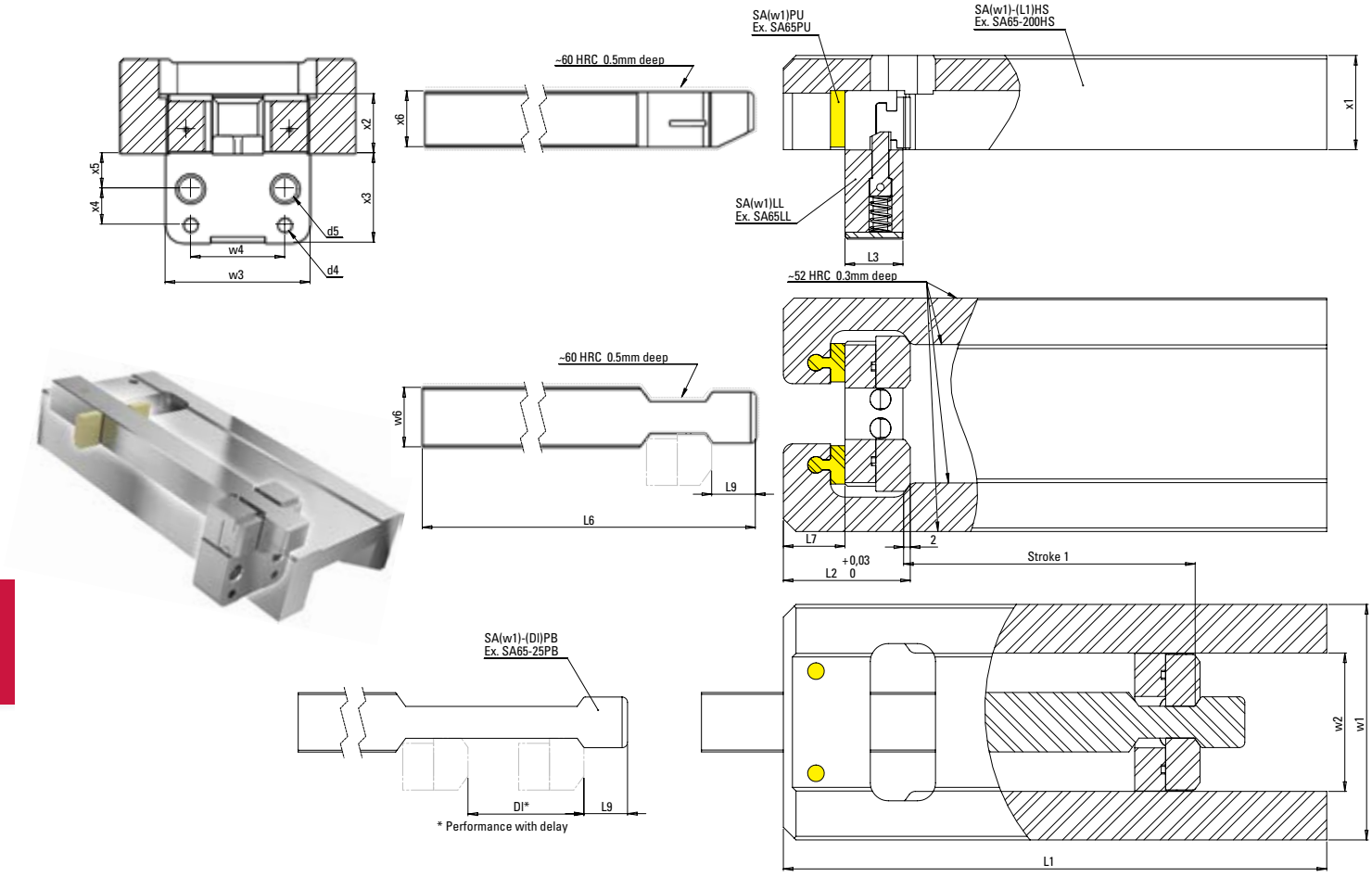

ITEM NUMBER SA(W1)-(L1)-(DI)	w1	L1	DI	x1	w2	L2	x2	w3	L3	x3	w4	d4	x4	d5	x5	w6	L6	x6	L7	L9	STROKE 1
SA55-130-00	55	130	00	23	32.2	32.6	14	34	15	23	22	4	10	M6	7	12.4	130	12.4	15.6	10.5	4-60
SA55-130-15			15														160				
SA55-130-25			25																		
SA55-160-00		160	00														130				4-90
SA55-160-15			15														160				
SA55-160-25			25																		
SA65-150-00	65	150	00	26	38.2	35	16.3	40	16	25	26	4	10	M8	10	16.4	150	15.4	17	12	5-80
SA65-150-18			18														200				
SA65-150-32			32																		
SA65-200-00		200	00														150				5-120
SA65-200-18			18														200				
SA65-200-32			32																		
SA80-200-00	80	200	00	31	49.2	42	19	52	20	30	32	5	12	M10	12	20.4	200	16.4	20	14	6-110
SA80-200-25			25														250				
SA80-200-50			50																		
SA80-250-00		250	00														200				6-160
SA80-250-25			25														250				
SA80-250-50			50																		
SA95-250-00	95	250	00	38	62.2	54	24	66	27	38	40	6	15	M12	14	25.4	250	23	25	16	7-140
SA95-250-30			30														300				
SA95-250-55			55																		
SA95-300-00		300	00														250				7-190
SA95-300-30			30														300				
SA95-300-55			55																		

DME External Latch Lock Allows Precision Control of Mold Plate Latching Operation

- Ideal for molds with floating plates, including stripper plates & 3-plate molds
- Floating plates are positively locked in place during mold opening and closing, preventing potential mold damage
- Ensures floating plates will be where they should be throughout the life of the mold
- Positively and precisely positions plates every time the mold opens and closes, allowing molds to run faster
- Simplifies mold design while improving design flexibility
- Designed and engineered to hold large loads while saving space inside the mold
- Simple design reduces machining time & labor costs
- Standardized components simplify mold maintenance
- Eliminates springs & associated play in plates, and reduces mold maintenance
- Standard sizes accommodate most mold base sizes and stroke lengths
- (4) sizes of housings with (2) housing lengths each; (3) puller bar lengths
- Puller bars & housing may be shortened as desired
- Stroke may be with or without delay

Example without delayed stroke sequence

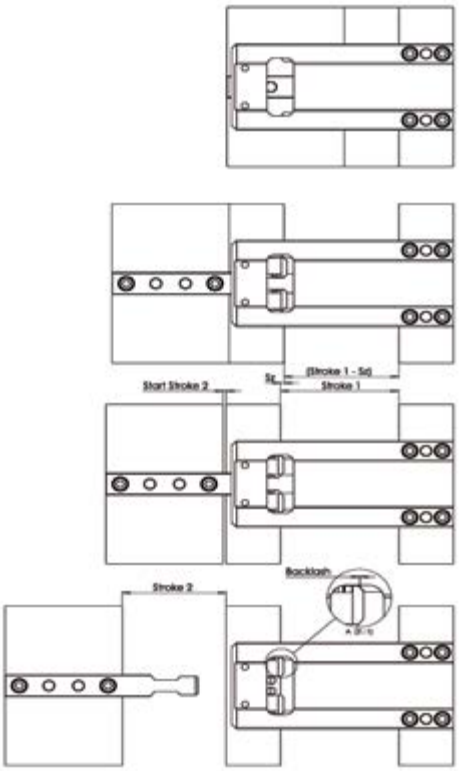

Example with delayed stroke sequence

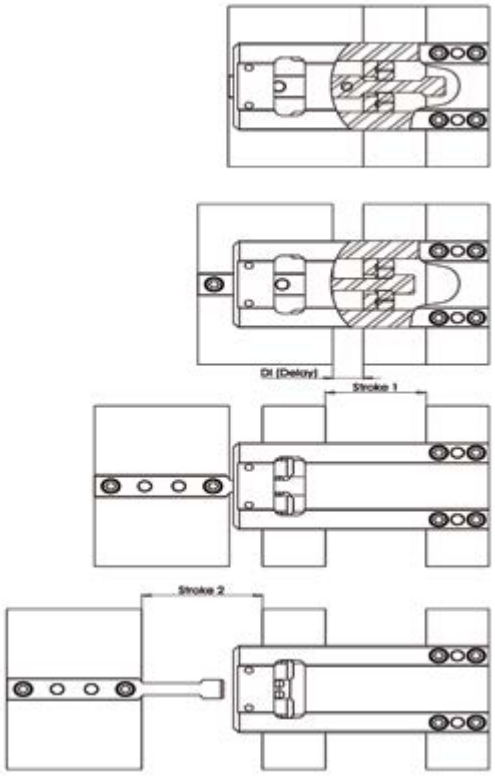

w1 (2pcs)	INTENDED MOLD SIZE	TR max. (TRACTION FORCE)	LF MAX.(LOCKING FORCE)	Sz	BACKLASH
55	246 x 246	20kN	1.5kN	2.0	0.25
65	396 x 396	35kN	2.0kN	2.3	0.25
80	646 x 646	50kN	3.0kN	2.7	0.30
95	796 x 796	80kN	4.0kN	3.2	0.35

SA..PU - shock absorber, buffer damper
DI - maximum delayed stroke
Sz - switching zone, stroke 2 begins slightly before the end of stroke 1

Backlash - Segments need clearance/play to allow the locking/unlocking sequence (built into the product)
TF - traction force (always retain the lowest)
LF - locking force (maximum holding force after stroke 1)

Animation:

http://www.dme.net/resources/multimedia/external-latch-lock

KL

Latch locks

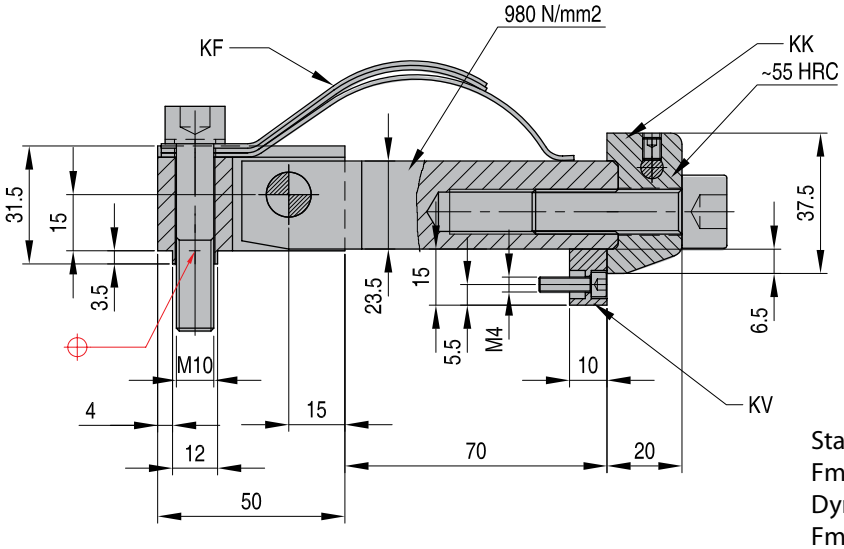

Static
Fmax. 40000 newton
Dynamic
Fmax. 16000 newton

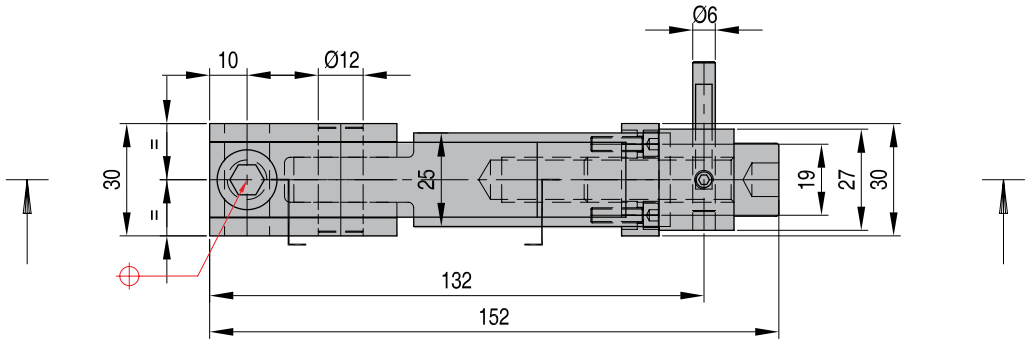

REF	Includes			To be ordered seperately
KL1-1-70	KF	KK	KV	KU

Number of Combinations

KL1/1/1
KL/1/2
KL/1/3
— KU1/1
KU/1/2

KL2/2 — KU/2/2

Latch locks

KL

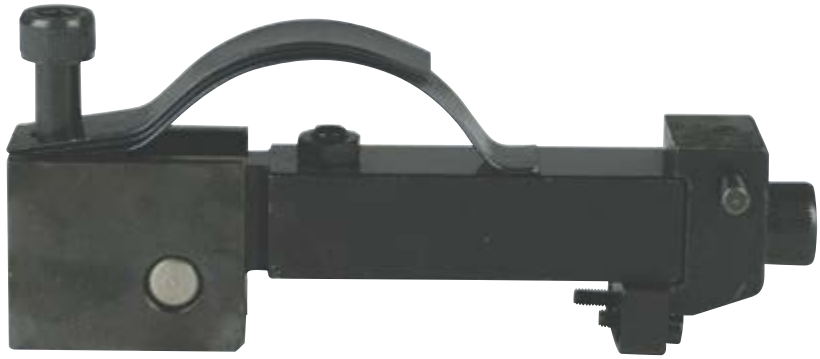

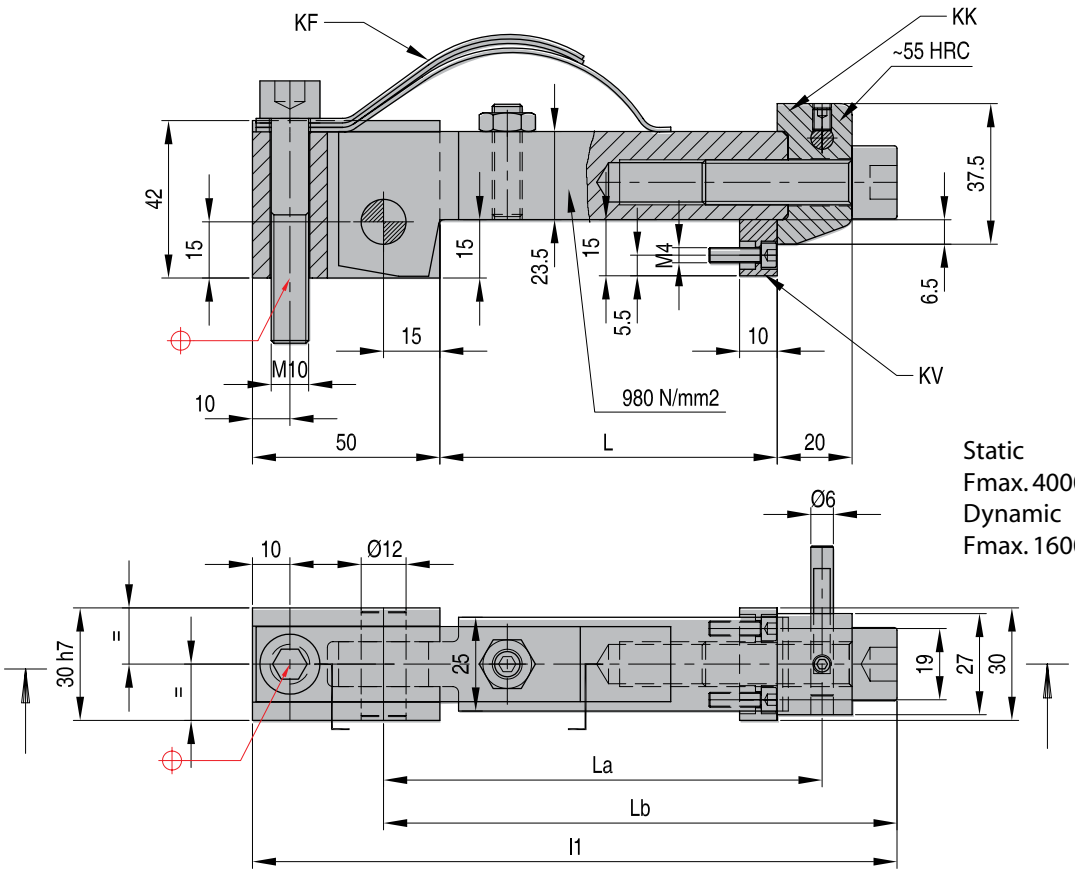

Static
Fmax. 40000 newton
Dynamic
Fmax. 16000 newton

REF	L	La	Lb	l1	Includes	To be ordered seperately
KL 1-2-90	90	117	137	172	**KF/KK/KV**	**KU**
KL 1-2-170	170	197	217	252	**KF/KK/KV**	**KU**
KL 1-2-220	220	247	267	302	**KF/KK/KV**	**KU**
KL 1-2-270	270	297	317	352	**KF/KK/KV**	**KU**

KL

Latch locks

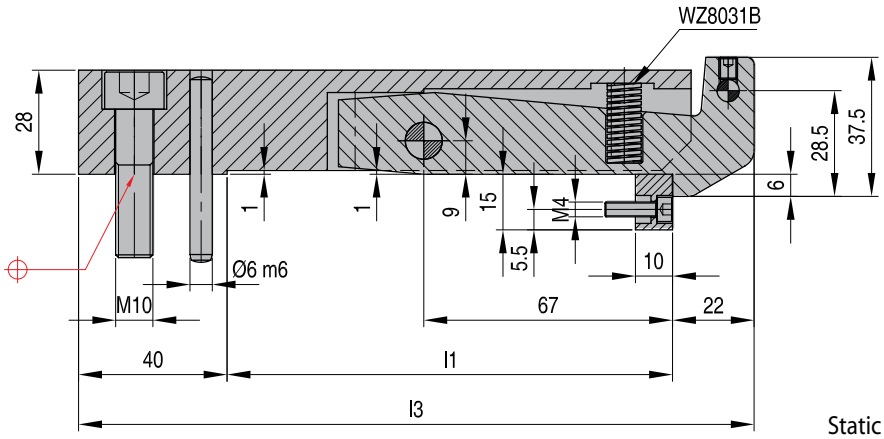

Static
Fmax. 65000 newton
Dynamic
Fmax. 30000 newton

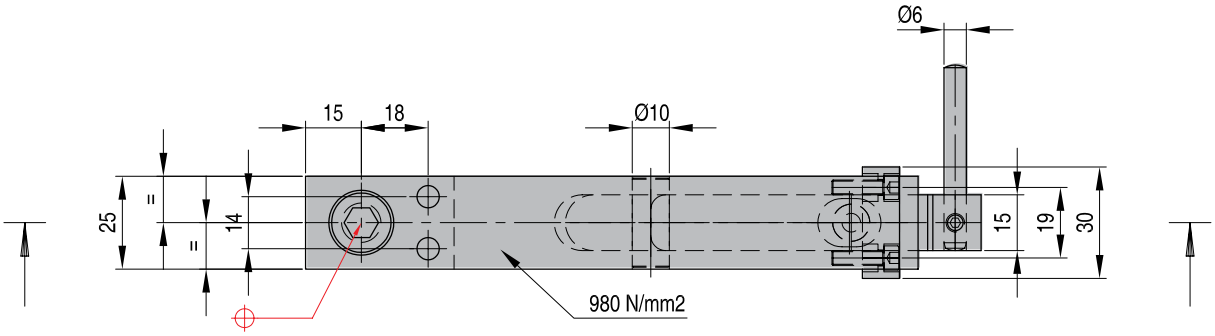

REF	l1	l3	Includes	To be ordered seperately
KL 1-3-120	120	182	**WZ8031 B 10-025**	**KU**
KL 1-3-170	170	232		**KU**
KL 1-3-220	220	282		**KU**

Baffle bar

KU

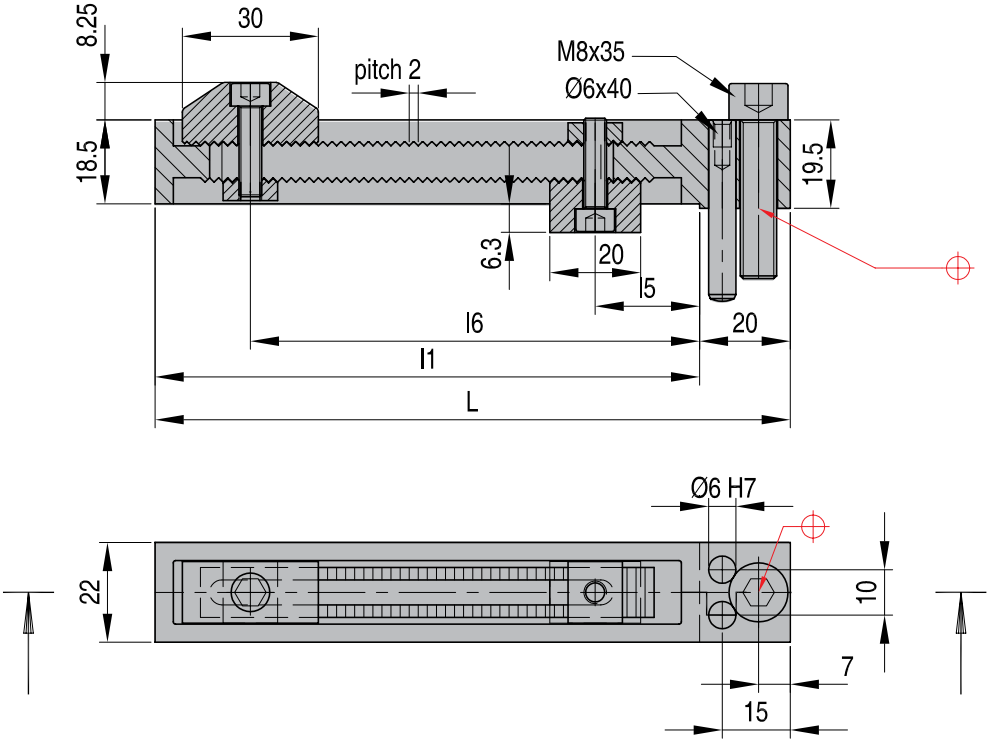

REF	L	l1	l5 min.	l5 max.	l6 min.	l6 max.
KU 1-1-140	140	120	23	105	23	99
KU 1-1-204	204	184	23	169	23	163
KU 1-1-254	254	234	23	219	23	213

KU

Baffle bar

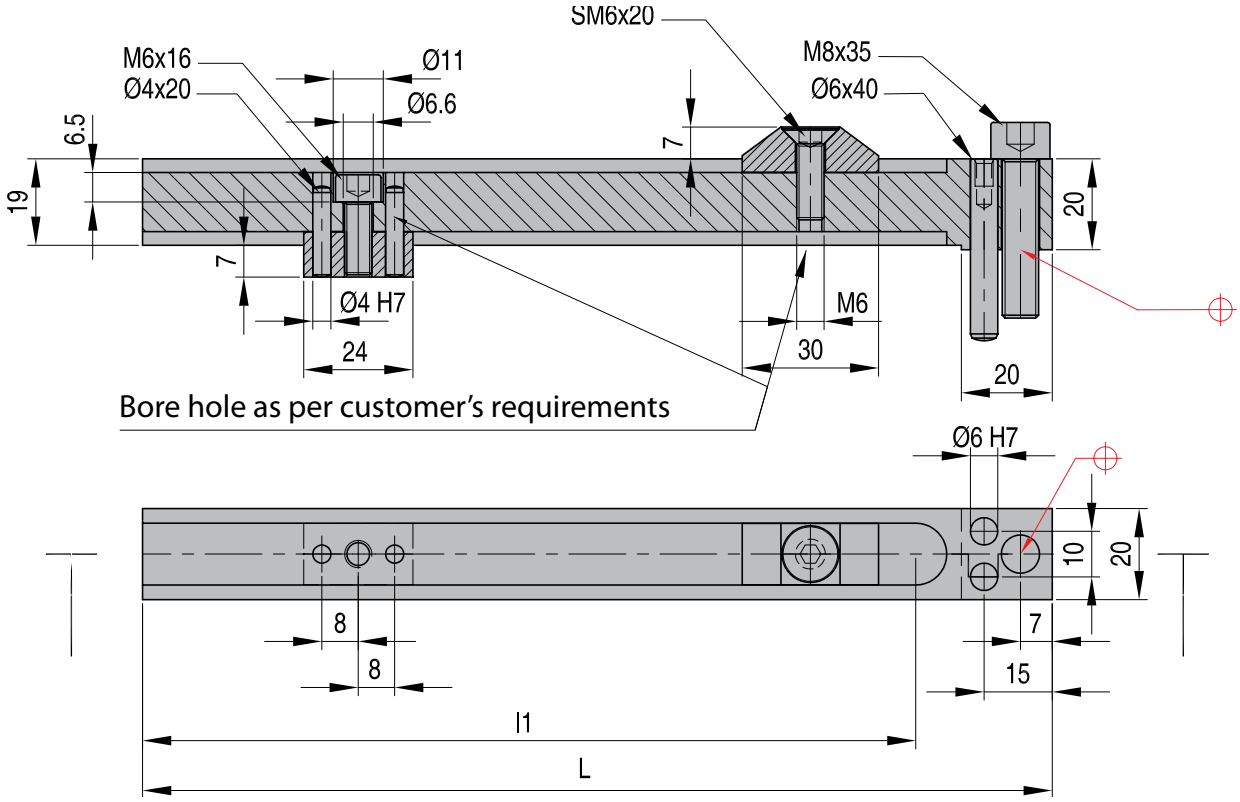

REF	L	l1
KU 1-2-200	200	170
KU 1-2-250	250	220
KU 1-2-300	300	270

Latch locks

KL

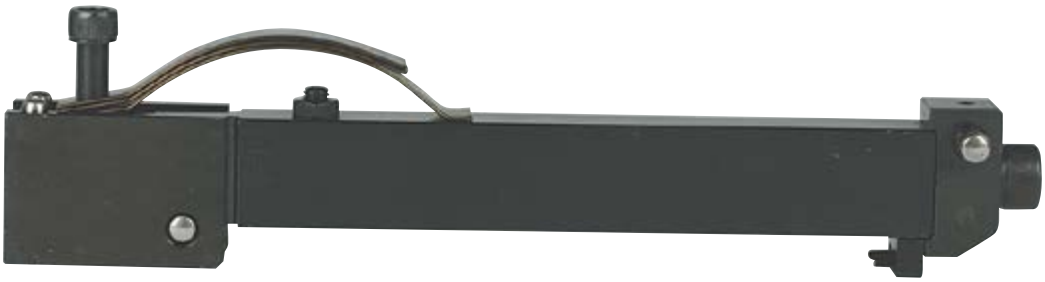

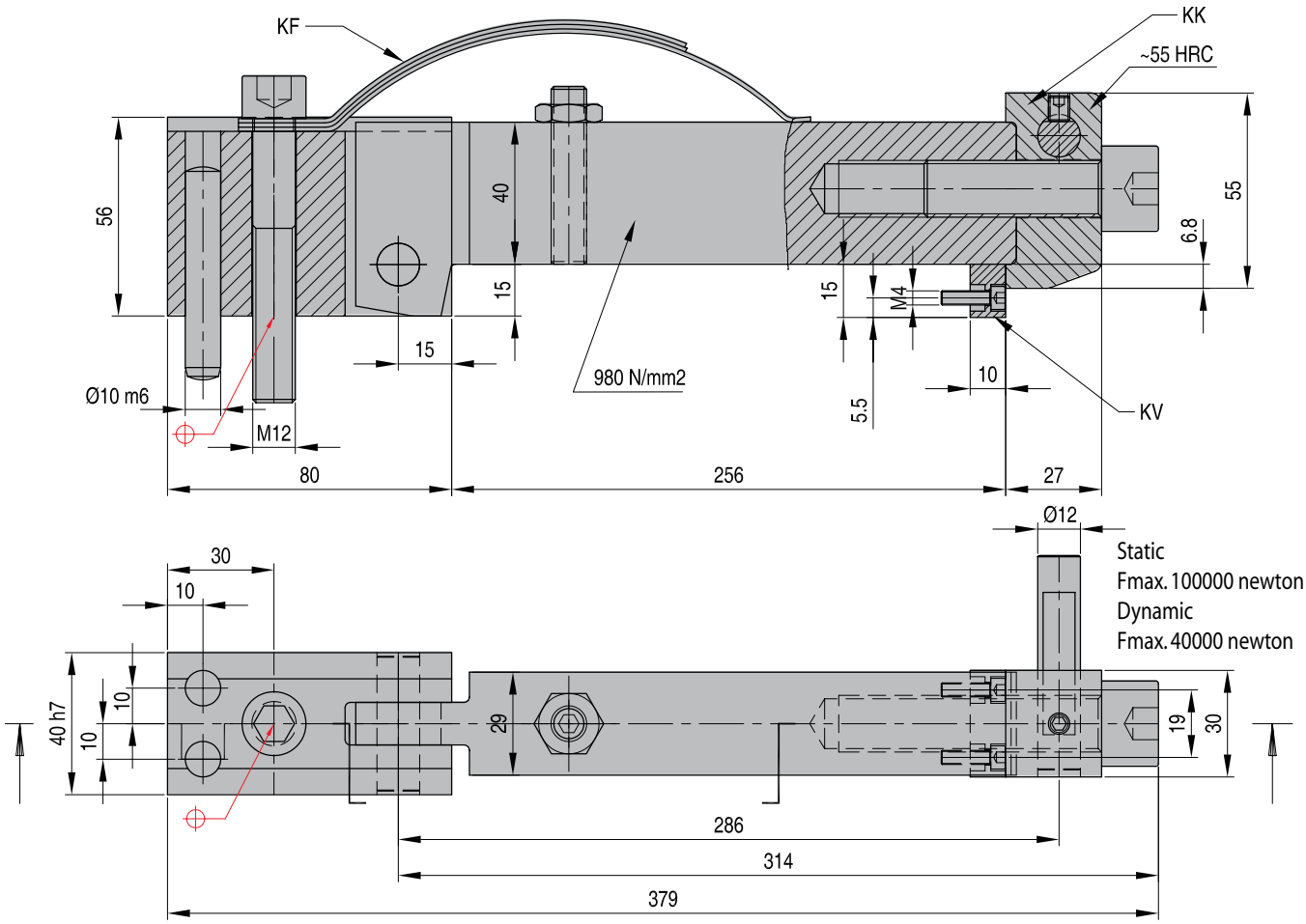

REF	Includes			To be ordered seperately
KL 2-2-256	KF	KK	KV	KU

KU

Baffle bar

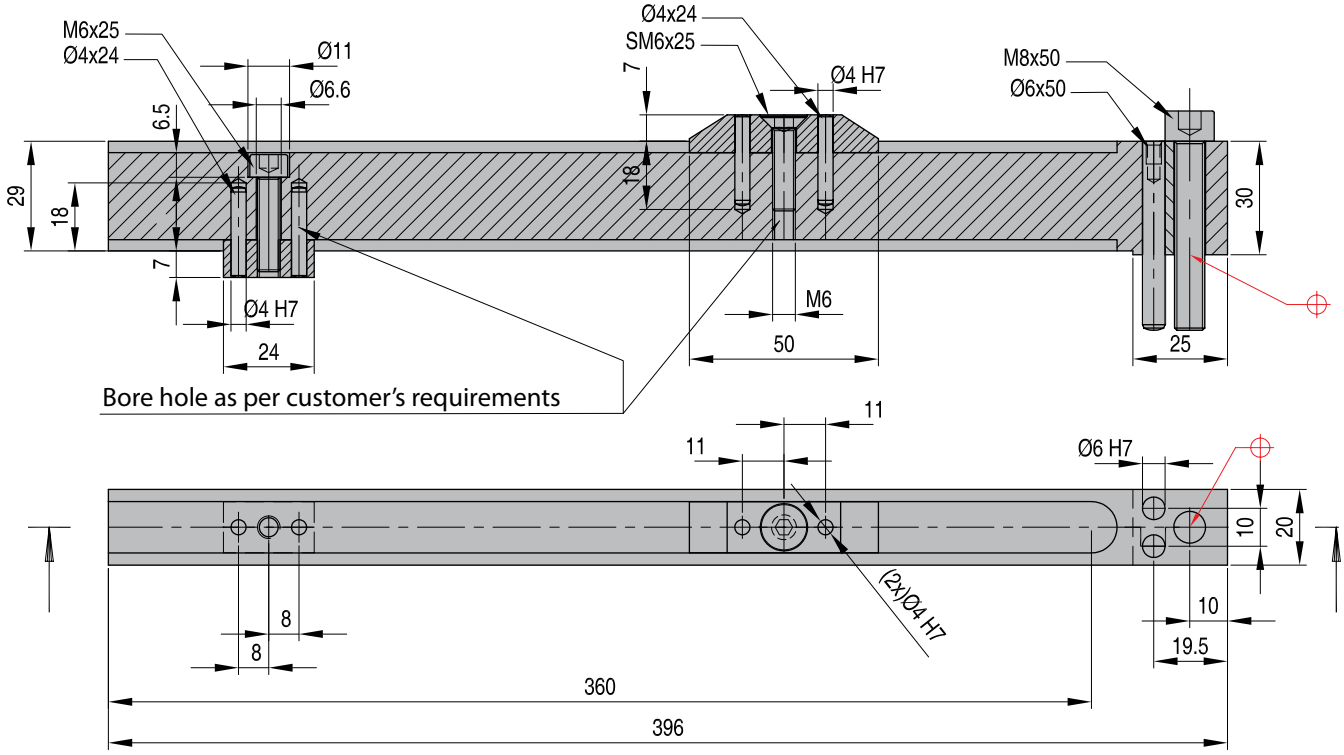

REF for KL 2-2-256
KU2-2-400

Springs

KF

REF	PART A	PART B	B	L1	L	FOR LATCH LOCK
KF 12-70	2x	1x	20	90	110	KL 1-1-70
KF 12-90	2x	1x	20	90	110	KL 1-2-90
KF 12-170	2x	1x	20	90	110	KL 1-2-170
KF 12-220-270	2x	1x	20	127	157	KL 1-2-220 - 270
KF 22-256	2x	1x	25	127	157	KL 2-2-256

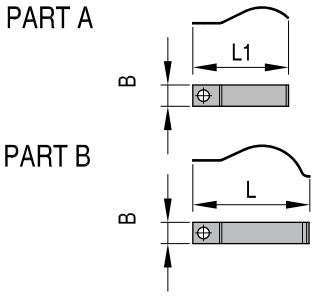

Heads

KK

REF	A	A1	A2	M	D	B	C
KK 11-12	37,5	23,6	21	157	6	27	20
KK 22	55	40	26,95	157	12	30	27

KK 11-12 for latch lock KL1-1-70 / KL1-2-170 / KL1-2-220 / KL1-2-270
KK 22 for latch lock KL2-2-256

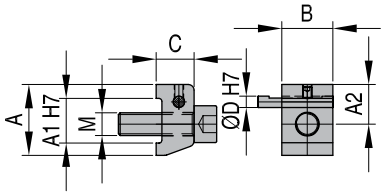

Wearing bars

KV

REF	
KV 11-12	FOR ALL KL

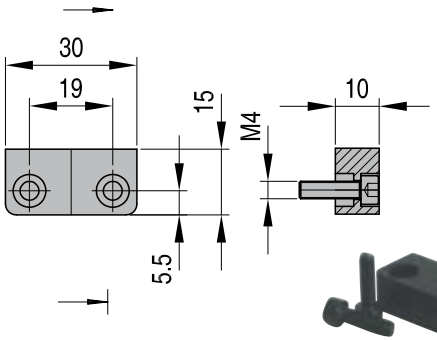

Springs

WZ 8031

REF	
WZ 8031 B 10-25	FOR ALL KL 1-3-*

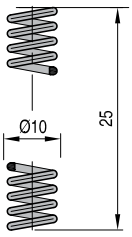

KL-KU

Example

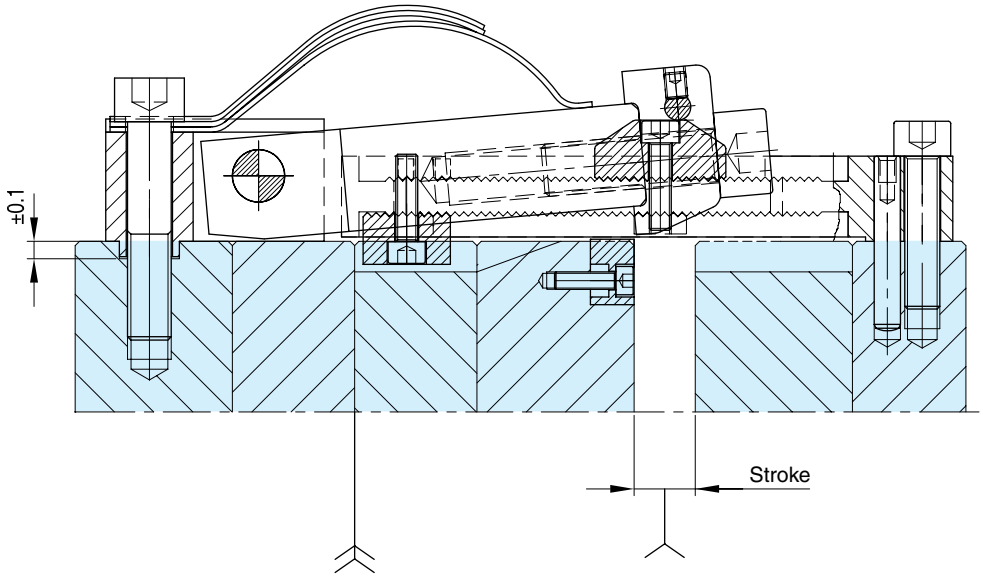

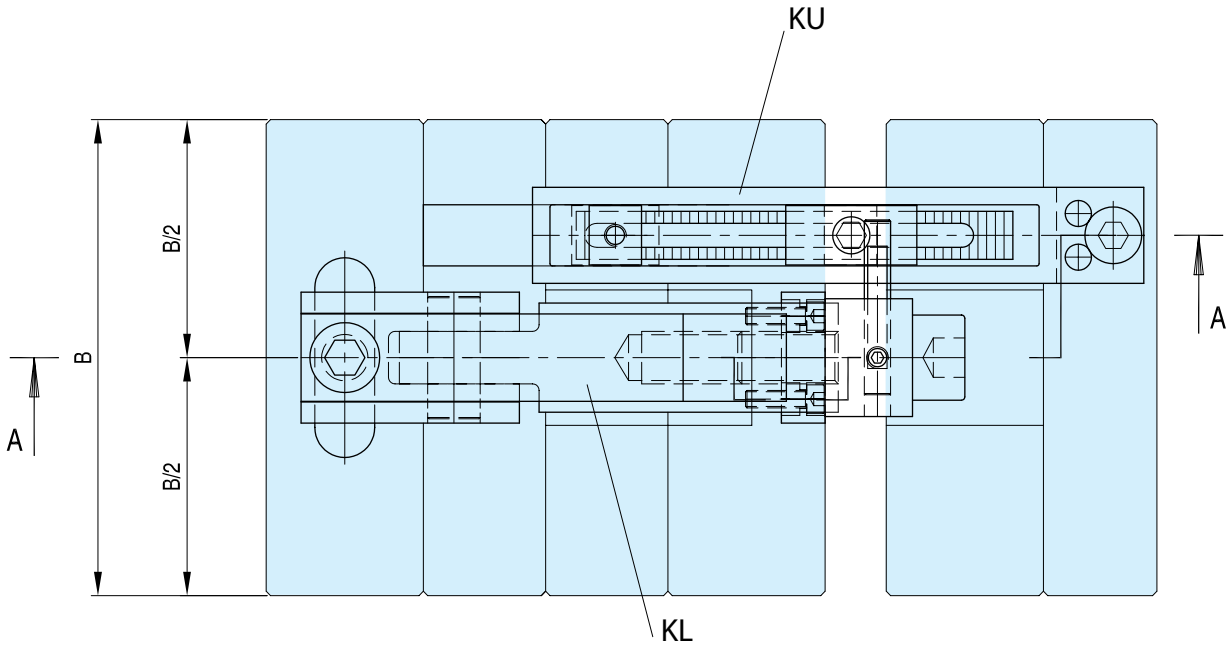

Example

KL-KU

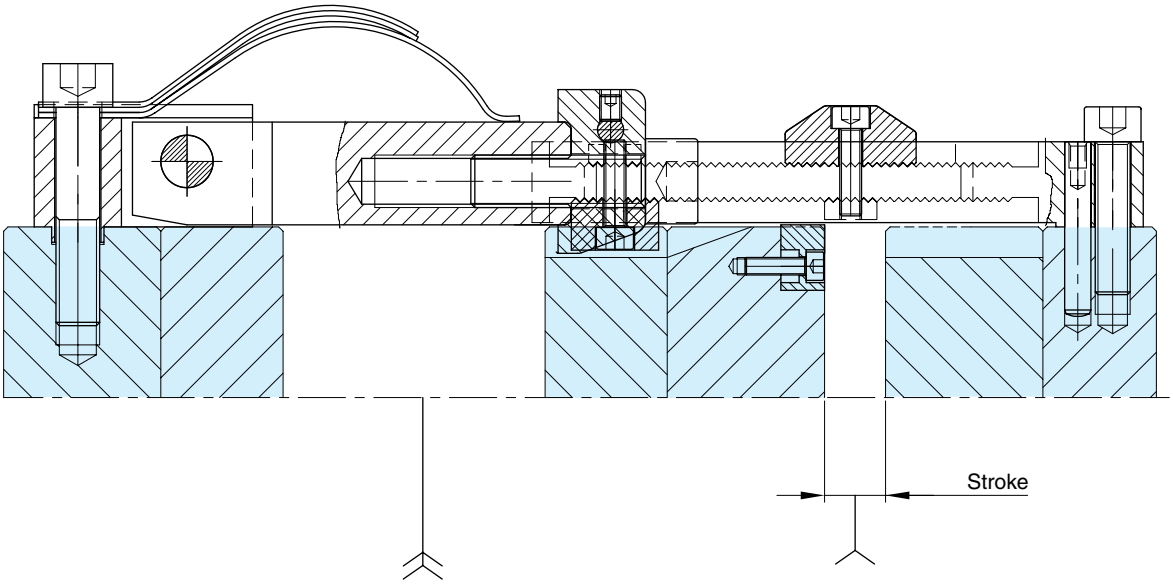

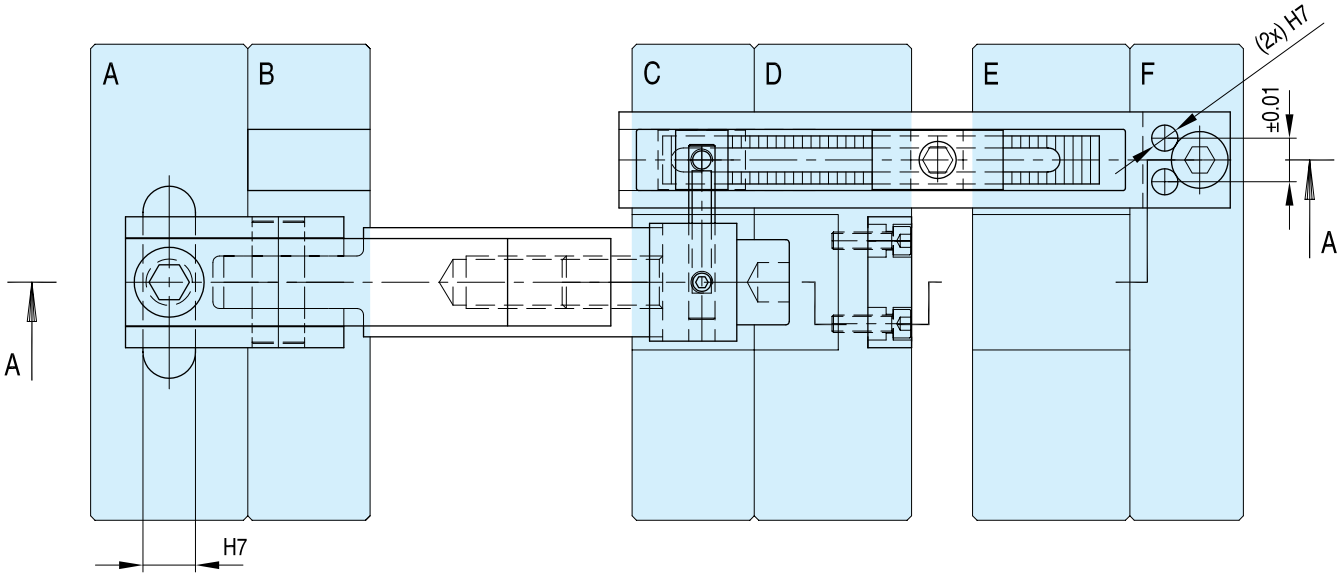

MILACRON®

DKL

Internal Latch Lock

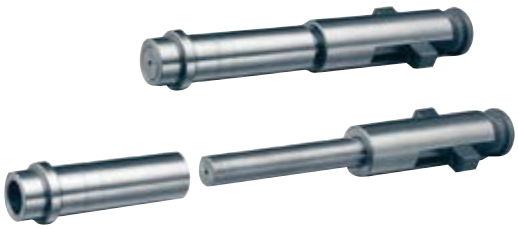

DME's unique internally-mounted latch lock mechanism adapts to a number of mold base sizes and plate thicknesses. It is available in three sizes to accommodate most standard **DME** stripper plate mold bases. Two travel ranges and two center puller pin lengths are available for each of the three latch lock sizes. Once installed, **DME**'s internal latch locks control the sequence of one parting line opening after the first parting line has traveled a predetermined distance. After installation there are no adjustments that can be accidentally changed. The internal latch locks are most commonly used on **DME** stripper plate mold bases.

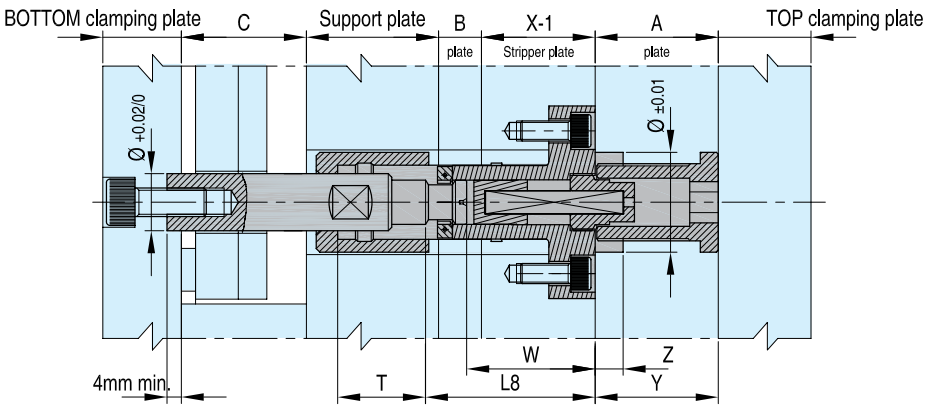

Basic Latch ∅	REF	Travel Range (1) Min./Max.	Center Puller Pin Length Options	Recommended max. Standard DME Mold Base Width	Max. Recommended Load Values Static - Dynamic	L8 Body	W(2) Puller Pin	Y(3) Mounting Plate	Z(4) C'Bare Depth	
28 Small	**DKL 2811**	5 -> 30	140	296	10 kN - 100 kg	40	23 ±0,1	22 -> 35	10	$^{+0,04}_{0}$
	DKL 2812		250							
	DKL 2821	30 -> 55	140							
	DKL 2822		250							
34 Medium	**DKL 3411**	6 -> 41	160	396	20 kN - 200 kg	51	32 ±0,1	27 -> 47,6	12	$^{+0,04}_{0}$
	DKL 3412		280							
	DKL 3421	41 -> 76	160							
	DKL 3422		280							
45 Large	**DKL 4511**	12 -> 58	200	596	30 kN - 380 kg	68	43 ±0,1	35 -> 60	16	$^{+0,04}_{0}$
	DKL 4512		310							
	DKL 4521	58 -> 104	200							
	DKL 4522		310							

(1) Supplied to provide maximum travel with no cutoff. To reduce travel between maximum and minimum, cut off slotted travel limiting sleeve on threaded end only per installation data. Cut off to no less than minimum travel; maintain close tolerances per installation data.

(2) This set-up dimension is critical and must be maintained as specified to properly locate pin and cam body to latch. Dimension W is from top of X-1 stripper plate to top end of center puller pin. See installation data for additional information.

(3) "Y" mounting plate dimension will be the "A" plate for stripper plate mold bases.

(4) This counterbore depth is critical and must be maintained as specified to locate split sleeve, cam body and pin to latch.

Internal Latch Lock

DKL

Basic selection and application design guidelines

1. Select the appropriate internal latch lock size – 28 mm diameter (small), 34 mm diameter (medium), or 45 mm diameter (large) based on the width of the mold base. However, large molds, thick plates or heavy load applications may require the next largest size assembly than is specified.
2. Select the appropriate travel range from the two choices for each size. This selection is based on the specific application requirements for the amount of travel that must occur at one parting line prior to the latch being released. The total travel requirements are based on the amount needed for the application as explained above, plus 3 mm minimum additional allowance. This added 3 mm minimum will make sure the full required travel has occurred before the latch lock starts its releasing action.
3. Select the appropriate length for the center puller pin from the two choices for each size. The length of the pin is determined by the specific application including the mold base plate thicknesses, where the pin will be mounted, etc. If possible, the center puller pin should be mounted in the support plate. However, some applications require the center puller pin to be mounted in the bottom clamping plate. This will depend on the travel or the length of the split sleeve component which controls the travel and the plate thicknesses in the mold base.
4. A minimum of four assemblies are recommended per mold. However,
for larger molds, thick plates, or an application where loads are near maximum, additional assemblies and/or next largest size assemblies may be required. An application must never exceed the maximum recommended load values. A balanced load must be maintained to avoid cocking and binding which could cause severe overloading. Only one size latch lock assembly should be used in each mold base.
5. The center puller pin should be counterbored into its mounting plate 4 mm minimum for most applications, as shown in the drawings at right. This counterbore aligns the center puller pin with the other components in the assembly.
6. It is important to make sure that the leader pin lengths in all applications are long enough to fully engage the stripper plate through its full travel. The latch lock mechanism latches two plates together but is not intended to provide guidance. Instead it relies on the leader pins in the mold for proper alignment and support of the actuated stripper plates.
7. In the fully latched position the internal latch lock mechanism will allow movement of approximately 0.4 mm for the 28 mm diameter and 34 mm diameter assemblies and approximately 0.5 mm for the 45 mm diameter assemblies.
8. Injection molding machine mold opening speed may have to be reduced in order to make sure that excessive shock loading does not occur.
9. The Internal Latch Lock is not recommended for severe load applications.
10. The Internal Latch Lock must not be exposed to temperatures that exceed 150°C at any time.
11. An optional sleeve can be added to the Latch Lock that provides two additional functions. However, this optional sleeve is not required for the Latch Lock function. The optional sleeve can be added to incorporate guided ejection and/or normal ejector assembly return functions in the mold.

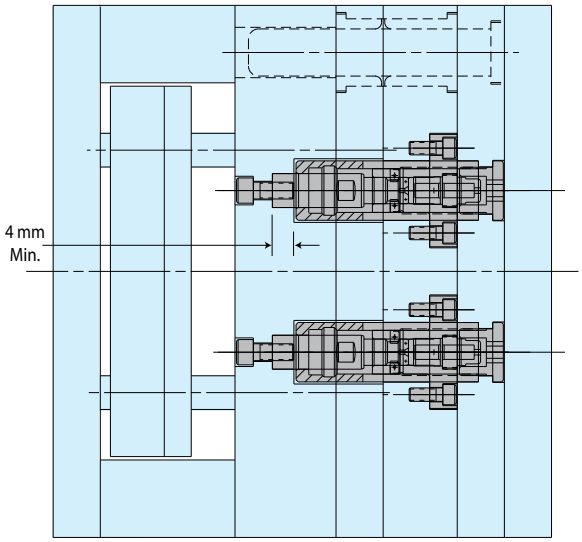

Internal Latch Lock application with center puller pins mounted in the support plate. This is typically done in applications where the travel is shorter and/or when mold plates are thicker.

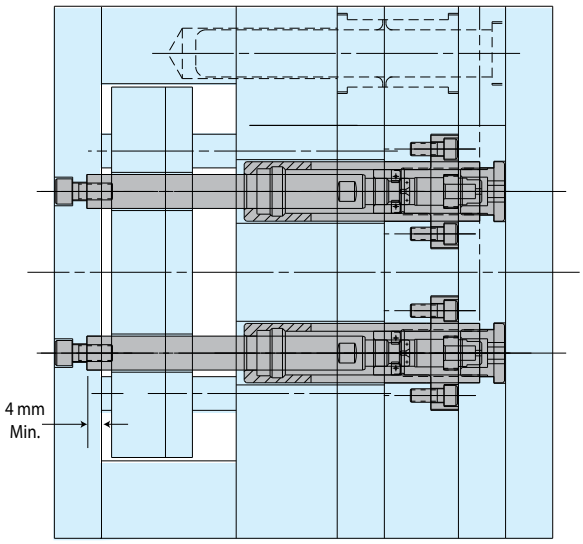

Internal Latch Lock application with center puller pin mounted in the bottom clamping plate. This is typically done in applications where the travel is longer and/or when mold plates are thinner. (Some applications may require a thicker than standard bottom clamping plate.)

MILACRON®

DKL

Internal Latch Lock

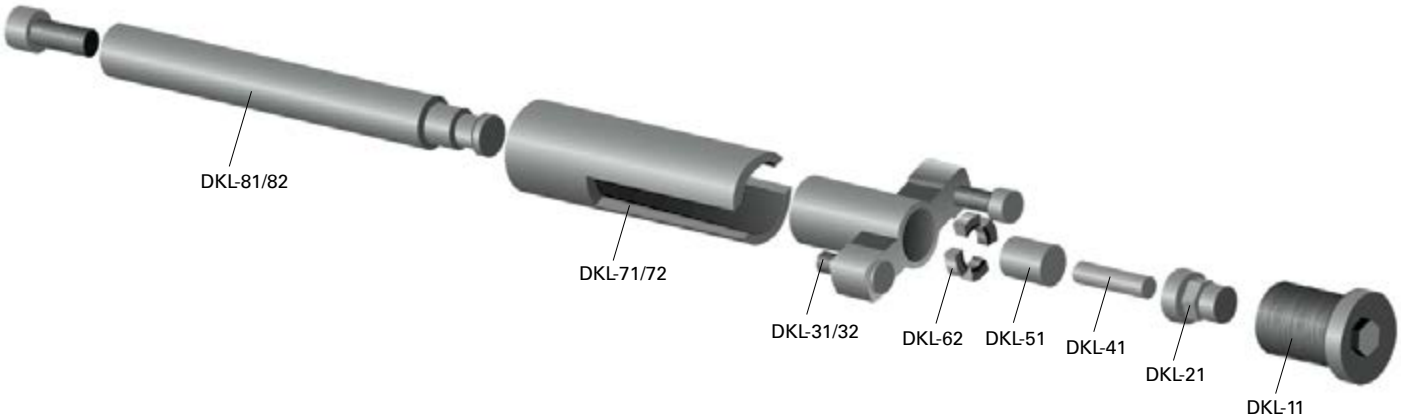

Basic Latch Size ø	Plate Latching Assembly	Assembly Retaining Screw	Spring Retainer	Body for Cam Fingers without Cam Fingers	Body for Cam Fingers with 4 Cam Fingers*	Cam finger Replacement kit**	Spring for Holding Pin	Holding Pin For Cams	Slotted Travel Limiting Sleeve		Center Puller Pin	
	REF	DKL 11	DKL 21	DKL 31	DKL 32	DKL 62	DKL 41	DKL 51	DKL 71/72	T ravel range	DKL 81/82	Length
28 Small	DKL 2811	DKL-2011	DKL-2021	DKL-2031	DKL-2032	DKL-2062	DKL-2041	DKL-2051	DKL-2071	5 - 30	DKL-2081	140
	DKL 2812										DKL-2082	250
	DKL 2821								DKL-2072	30 - 55	DKL-2081	140
	DKL 2822										DKL-2082	250
34 Medium	DKL 3411	DKL-3011	DKL-3021	DKL-3031	DKL-3032	DKL-3062	DKL-3041	DKL-3051	DKL-3071	6 - 41	DKL-3081	160
	DKL 3412										DKL-3082	280
	DKL 3421								DKL-3072	41 - 76	DKL-3081	160
	DKL 3422										DKL-3082	280
45 Large	DKL 4511	DKL-4011	DKL-4021	DKL-4031	DKL-4032	DKL-4062	DKL-4041	DKL-4051	DKL-4071	12 - 58	DKL-4081	200
	DKL 4512										DKL-4082	310
	DKL 4521								DKL-4072	58 - 104	DKL-4081	200
	DKL 4522										DKL-4082	3100

Assembly retaining screw

DKL11

REF	Size	D1	D2	D3	L1	L2	L3	F1
DKL-2011	Small	28	M22x1,25	13,5	34	5	26	10
DKL-3011	Medium	33	M26x1,5	16	46	6	35	12
DKL-4011	Large	42	M34x1,5	18,4	59	10	42	14

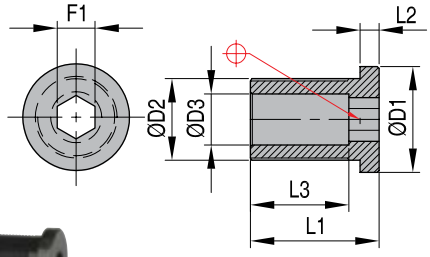

Spring for holding pin

DKL41

REF	Size	D15	L18
DKL-2041	Small	6,5	56
DKL-3041	Medium	8	70
DKL-4041	Large	9,7	90

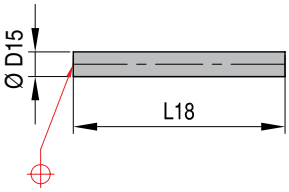

Holding pin for cams

DKL51

REF	Size	D16	D17	L19	L20
DKL-2051	Small	12,3	12,9	15	3
DKL-3051	Medium	14,4	15,4	23	5
DKL-4051	Large	19,4	20,4	32	7

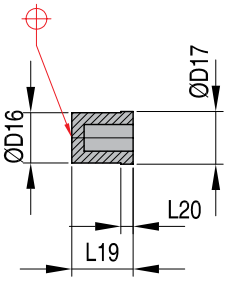

Spring retainer

DKL21

REF	Size	D4	D5	D6	D7	L4	L5	L6	L7	F2
DKL-2021	Small	12,6	M16x1	6,8	2,6	18	7	7	15	11
DKL-3021	Medium	15,0	M19x1	8,3	3,0	21	8	8	17	13
DKL-4021	Large	17,2	M24x1	10,0	3,5	25	10	9	21	15

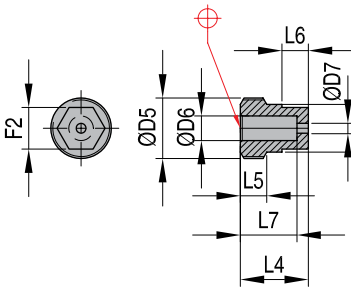

DKL62

Cam finger replacement kit

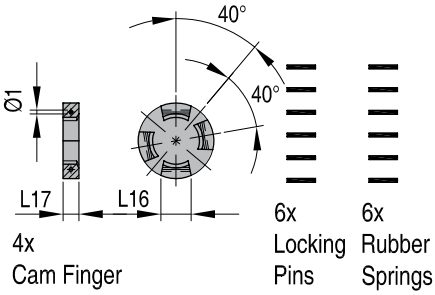

REF	Size	L16	L17
DKL-2062	Small	5,8	4,2
DKL-3062	Medium	7,2	4,8
DKL-4062	Large	9	6,0

DKL32

Body for cam fingers - with cam fingers

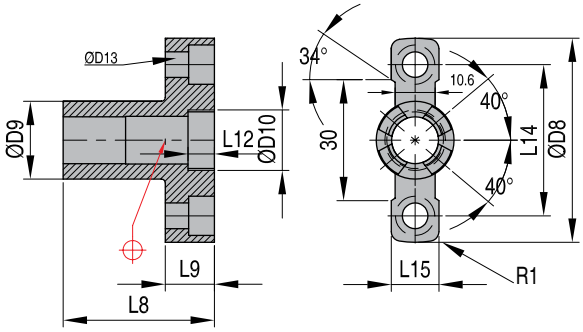

											D13			
REF	Size	D8	D9	D10	L8	L9	L12	L14	L15	R1	Drill Ø	C'bore Ø	C'bore depth	Metric S.H.C.S.
DKL-2032	Small	54	20,6	M16x1	40	13	7	40	12,6	2,5	6,8	10,4	6,8	M6x1

DKL32

Body for cam fingers - with cam fingers

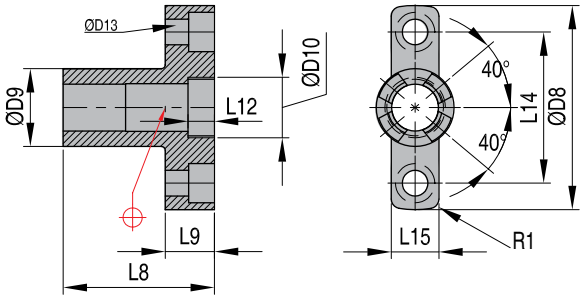

											D13			
REF	Size	D8	D9	D10	L8	L9	L12	L14	L15	R1	Drill Ø	C'bore Ø	C'bore depth	Metric S.H.C.S.
DKL-3032	Medium	60	24,4	M19x1	51	15	8	46	12,6	2,5	6,8	10,4	6,8	M6x1
DKL-4032	Large	78	32,4	M24x1	68	20	10	60	17	4	8,4	13,7	8,5	M8x1,25

Slotted travel limiting sleeve

DKL71/72

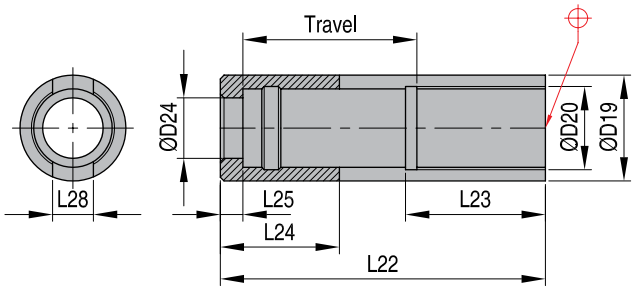

REF	Size	Travel Range Min./Max.	L22	D19	D20	D24	L23	L24	L25	L28
DKL-2071	Small	5->30	86	28	M22x1,25	16	37	31,5	6	10,8
DKL-2072	Small	30->55	111	28	M22x1,25	16	37	31,5	6	10,8
DKL-3071	Medium	6->41	111	34	M26x1,5	19	49	41	7	12,8
DKL-3072	Medium	41->76	146	34	M26x1,5	19	49	41	7	12,8
DKL-4071	Large	12->58	152	45	M34x1,5	26	65	56	10	17,3
DKL-4072	Large	58->104	198	45	M34x1,5	26	65	56	10	17,3

Center puller pin

DKL81/82

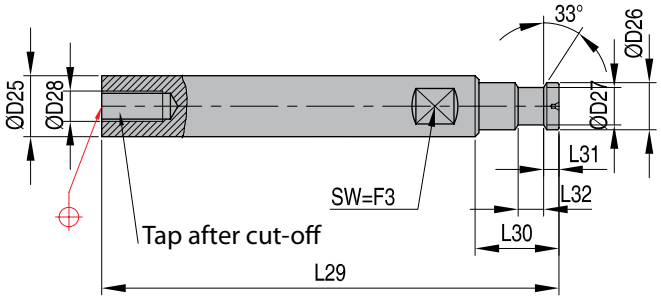

REF	Size	L29	D25	D26	D27	L30	L31	L32	F3	D28 Metric
DKL-2081	Small	140	16	12,4	9,8	21	4	6,7	13	M8x1,25
DKL-2082	Small	250								
DKL-3081	Medium	160	19	14,5	11,7	24	4,6	7,6	15	M10x1,5
DKL-3082	Medium	280								
DKL-4081	Large	200	26	19,5	15,9	31	5,5	9,5	22	M12x1,75
DKL-4082	Large	310								

DKL

Guided Ejection Sleeve

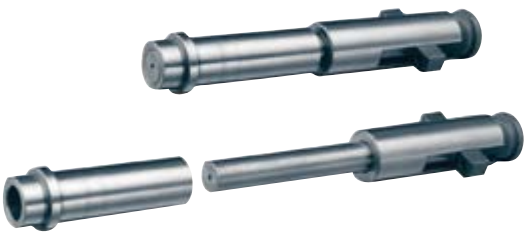

Add guided ejection and return pin functions to Internal Latch Lock mechanism with this optional sleeve

The optional Guided Ejection and Return Sleeves, although not required for the Internal Latch Lock, can add two functions to the mold base that are typically required in most molds. These optional sleeves can add guided ejection and ejector assembly return functions to the mold base. Additionally, these added functions fall within the space requirements of the plate latching mechanism. However, these optional sleeves do not create an early ejection return system that is occasionally required in some applications.

- Sleeves can add guided ejection function to mold base along with plate latching mechanism
- Sleeves can replace function of return pins in mold base for most applications using the plate latching mechanism
- Sleeves fit around the center puller pin of the plate latching mechanism and are mounted in the ejector assembly, thus eliminating the need for additional mold space usually required for the guided ejection and return pin functions

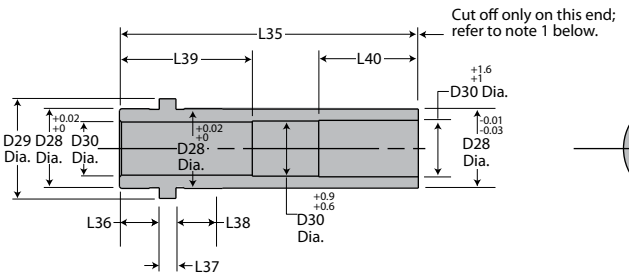

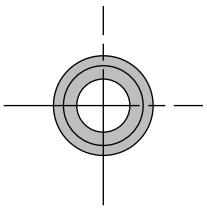

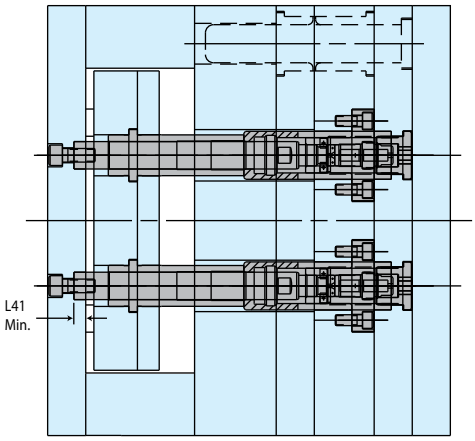

Basic Latch Size	REF Latching Assembly	Optional – Guided Ejection and Return Sleeve Features										
		REF Sleeve	L35 Length	D28 Ø	D29 Ø	D30 Ø	L36 Length	L37 Thickness	L38 Length	L39 Length	L40 Length	L41 Min.
28 (Small)	DKL-2811	DKL-2101	90	24	30	16	12	5	14	40	30	12
	DKL-2812	DKL-2101										
	DKL-2821	DKL-2102	140	24	30	16	12	5	14	40	30	12
	DKL-2822	DKL-2102										
34 (Medium)	DKL-3411	DKL-3101	110	28	35	19	14	6	16	50	35	15
	DKL-3412	DKL-3101										
	DKL-3421	DKL-3102	160	28	35	19	14	6	16	50	35	15
	DKL-3422	DKL-3102										
45. (Large)	DKL-4511	DKL-4101	140	38	46	26	18	8	20	70	40	20
	DKL-4512	DKL-4101										
	DKL-4521	DKL-4102	200	38	46	26	18	8	20	70	40	20
	DKL-4522	DKL-4102										

Notes:

1. Choose the appropriate length sleeve so that it can be cut off to a length that will fully return the ejector assembly. See installation data.
2. The center puller pins must support and guide the sleeves, as well as the ejector assembly. The pins must have sufficient bearing surface contact as specified by dimension "L41" minimum.
3. Additional bearing surface contact for the center puller pins may require a thicker bottom clamping plate or the addition of another plate to the bottom of the mold for some applications.
4. A minimum of four assemblies are typically recommended per mold. However, for larger molds, thick plates, or an application where loads are near maximum, additional assemblies and/or next largest size assemblies may be required. An application must never exceed the maximum recommended load values. A balanced load must be maintained to avoid cocking and binding which could cause severe overloading. Only one size Latch Lock assembly should be used in each mold base.

FW1800

2-stage ejectors are used in situations where two ejection sequences are required, for example, to demold undercuts with inclined cores or ensure that slides do not collide with ejector pins. **DME**'s range of two-stage ejectors systems offer two types of functionality.

1. Ejector Plates Back

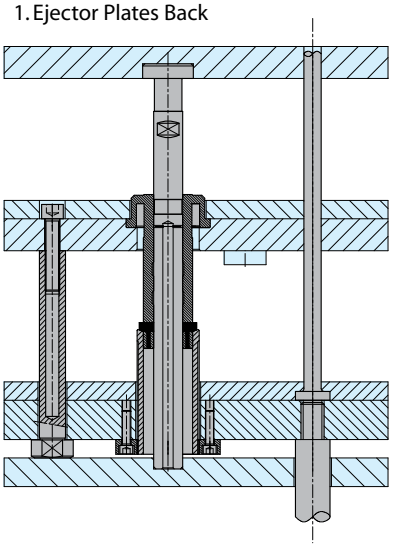

2. First Ejector Stroke

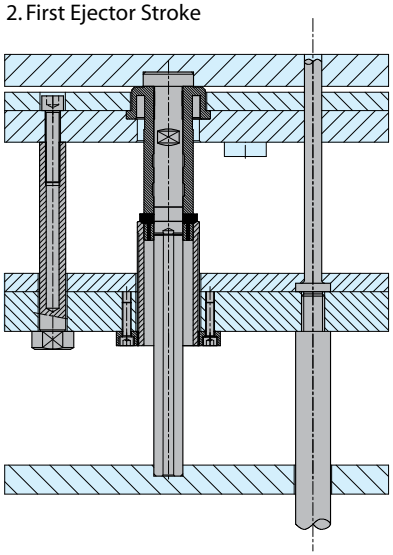

3. Second Ejector Stroke

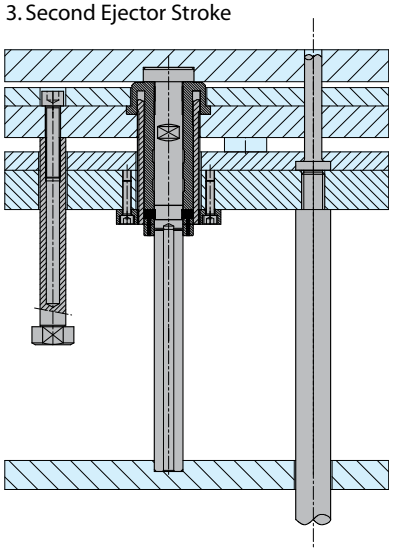

"Bottom last" using FW 1850 and TSBL types: 1st movement: both sets of ejector plates, 2nd movement: bottom set of ejector plates.

1. Ejector Plates Back

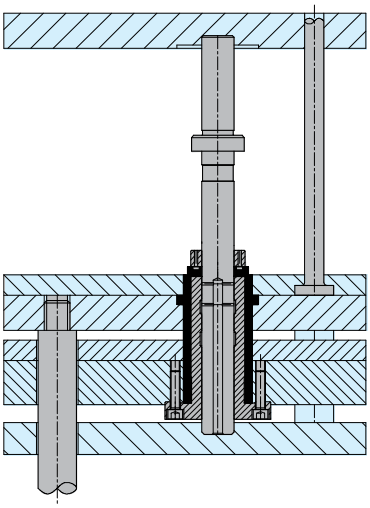

2. First Ejector Stroke

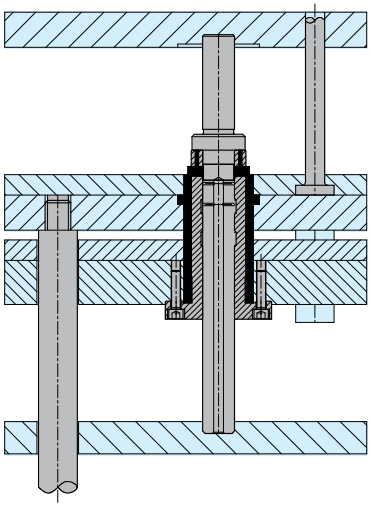

3. Second Ejector Stroke

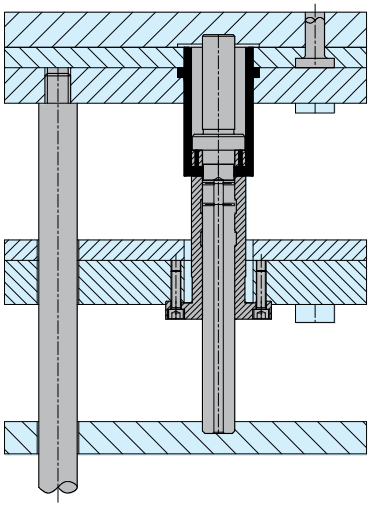

"Top last" using FW 1800 and TSTL types: 1ste movement: both sets of ejector plates, 2nd movement: top set of ejector plates.

FW1800 & FW1850

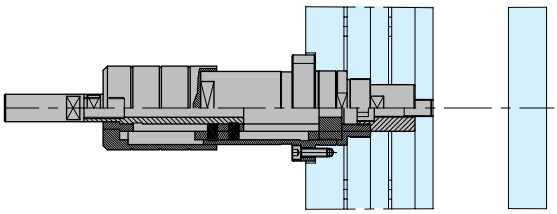

TSTL & TSBL

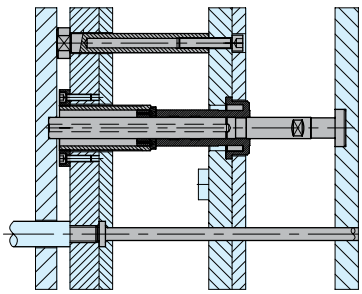

Furthermore, two versions of installation are available:
Central mounted using FW 1800 and FW 1850: this is the simplest installation for smaller, less complex molds. A single unit (FW 1800 or FW 1850) is connected directly to the machine ejector rod.

Off-centre mounted using TSTL and TSBL: fully contained inside the mold preventing interference and accidental tampering. Useful where the central space is not available. Two or four units are used allowing larger molds.

FW1800

Two-Stage Single-Stroke ejector

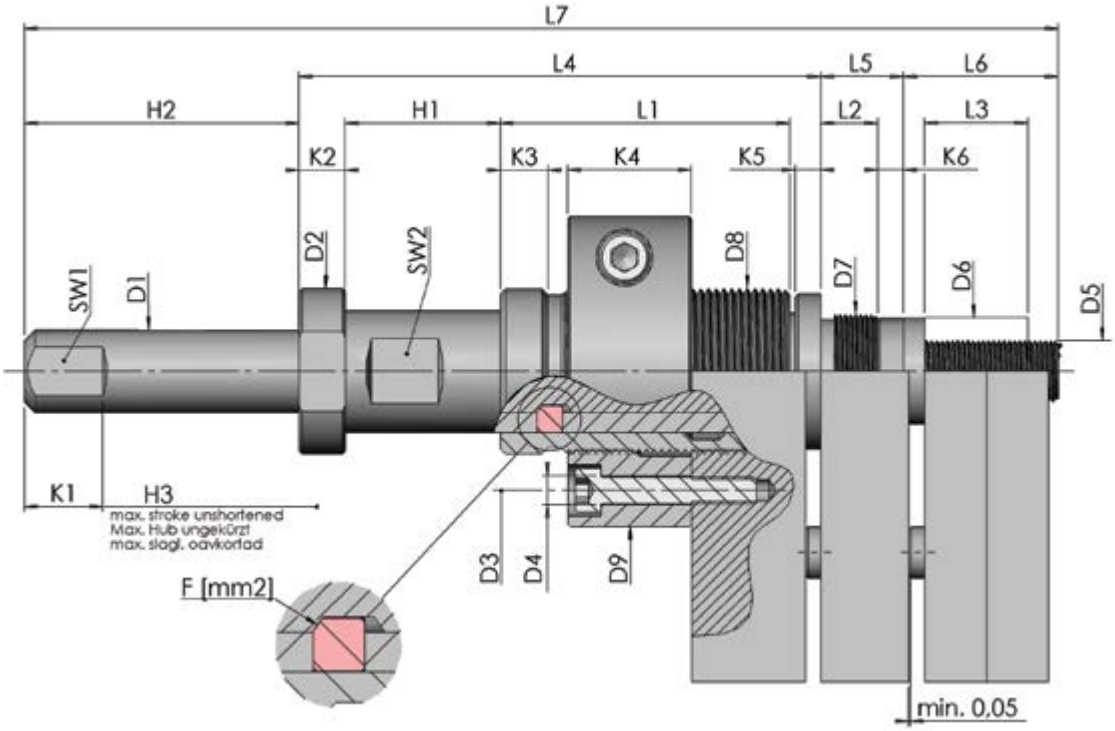

REF	D8	D1	D5	D7	D9	D3	D4	D2	D6
FW1800 M32x1,5	M32x1,5	16	M12x1,0	M22x1,0	60	46	M5	32	20,6
FW1800 M42x1,5	M42x1,5	22	M16x1,5	M30x1,5	80	62	M6	42	28,0
FW1800 M52x1,5	M52x1,5	28	M20x1,5	M38x1,5	90	72	M8	53	36,0
FW1800 M62x1,5	M62x1,5	37	M24x1,5	M48x1,5	120	80	M8	63	44,0

REF	L7	L6	L4	L2	L1	L3	L5	H1	H2	K1	K6	K2	K5	K3	K4	SW1	SW2	A mm²
FW1800 M32x1,5	200	30	101	11	56	20	16	5-30	50	16	5	9,0	5	8	24	13	20	56
FW1800 M42x1,5	266	40	132	16	75	30	22	10-40	70	20	6	9,0	6	10	30	17	27	100
FW1800 M52x1,5	285	45	134	16	75	35	22	10-40	80	22	6	10,5	8	12	30	22	35	152
FW1800 M62x1,5	300	50	140	16	80	40	22	10-40	80	22	6	10,5	8	12	30	30	44	215

Two-Stage Single-Stroke ejector

Assembly FW1800

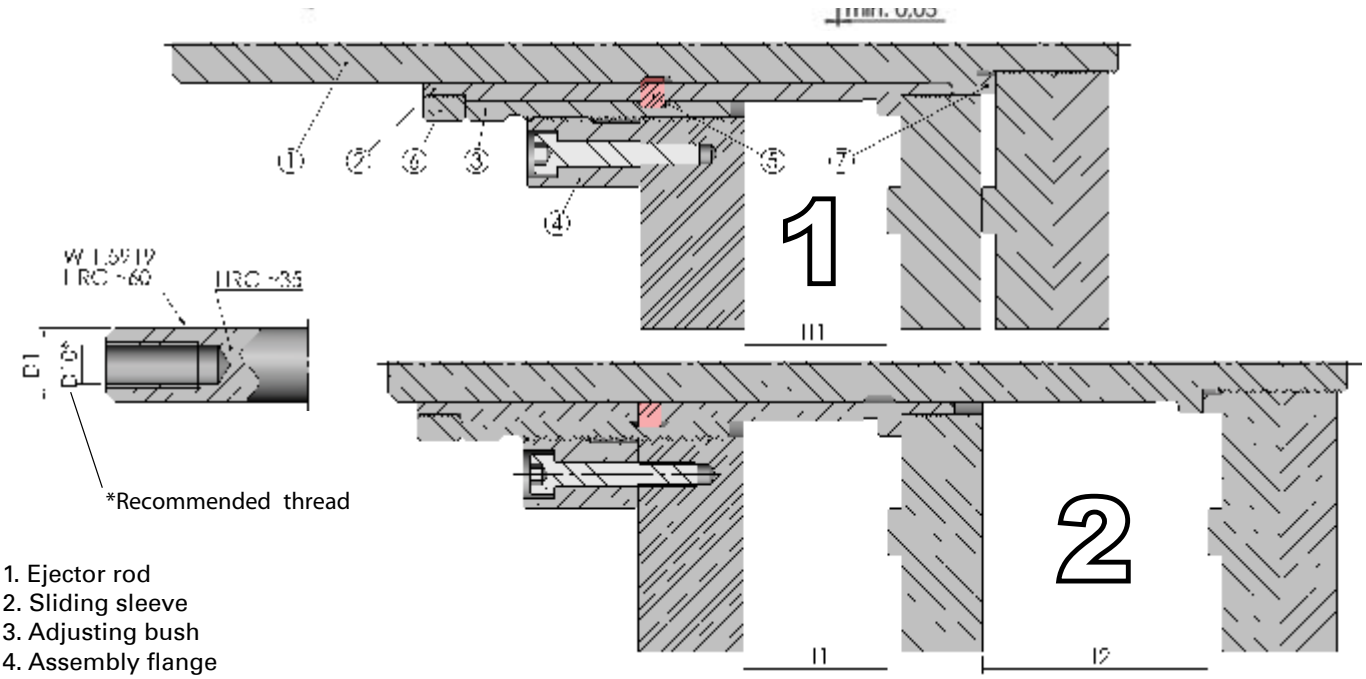

1. Ejector rod
2. Sliding sleeve
3. Adjusting bush
4. Assembly flange
5. Segments
6. Stopring
7. Spacer

Fitting:
1. Mount ejector rod no. 1 together with ejector plate. For safety please use LOCTITE C 242.
2. Move over parts no. 2, 3 and 4 together and tighten up part no. 3 (SW2 see chart).
3. Tighten up adjusting bush no. 3 with assembly flange no. 4.
4. Fix assembly flange.

Recommended lubricants: C 135, C 138/139, C 170, etc.

Installation instructions:
This device is preferably screwed together with the hydraulic machine ejector.
The required internal or external thread of part no. 1 has to be made adequately. The ejector rod no. 1 may not be shortened by more than length k1, if the total stroke h3 (h3= h1 + h2), including a possible deeper run in of part no. 1 into part no. 2, is not be maintained.
By rotating adjustment of bush no. 3 the first stroke h1 is continuously adjusted. With stroke h1 both ejector pin plates are moved simultaneously. On the following stroke h2 only the second ejector pin plate movement is continued. Choose the thickness of the spacer ring no. 7 so, that there is at least 0,05 mm clearance between the ejector pin plates (see fig. 1).

FW1850

Two-stage single-stroke ejector

The two-stage single-stroke ejector can be integrated into injection molding tools.

This ejector automatically divides the motion into two sequential strokes.

The functional sequence associated with this makes it possible to create new mold ejection mechanisms.

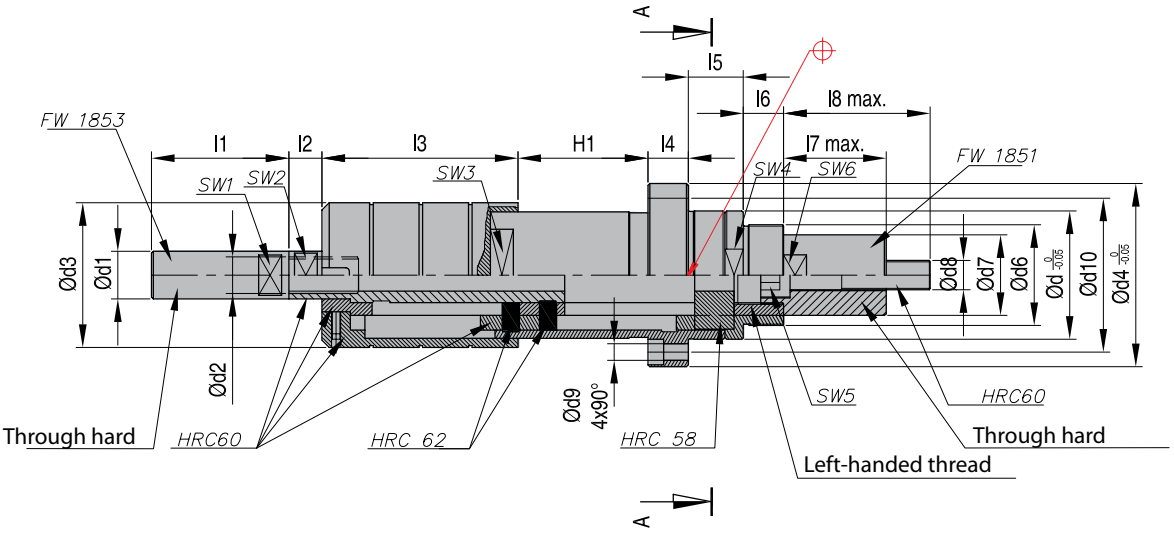

SECTION A-A

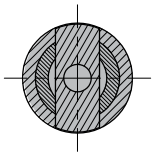

REF d x H1 max	H1 max	H2	d1	d2	d3	d4	d6	d7	d8	d9	d10
FW1850 50x32	5-32	12-32	18	M12	56	75	M40x1,5	31,5	M12x1,25	M6x16	62
FW1850 58x40	5-40	15-40	22	M16	64	90	M45x1,5	36,0	M14x1,50	M8x20	72
FW1850 58x56	5-56	25-65	22	M16	64	90	M45x1,5	36,0	M14x1,50	M8x20	72
FW1850 70x71	10-71	20-71	26	M20	79	100	M55x1,5	44,0	M16x1,50	M8x25	84

REF	l2	l3	l4	l5	l6	l7 max.	l8 max.	SW1	SW2	SW3	SW3 Nm	SW4	SW5	SW6
FW1850 50x32	12	58	14	25	17	36	50	14	14	36	120	46	6	27
FW1850 58x40	15	68	16	25	17	45	66	18	18	41	160	55	8	32
FW1850 58x56	15	84	16	25	17	45	66	18	18	41	120	55	8	32
FW1850 70x71	18	107	22	30	22	56	80	22	24	50	200	65	10	38

Two-stage single-stroke ejector

Assembly FW1850

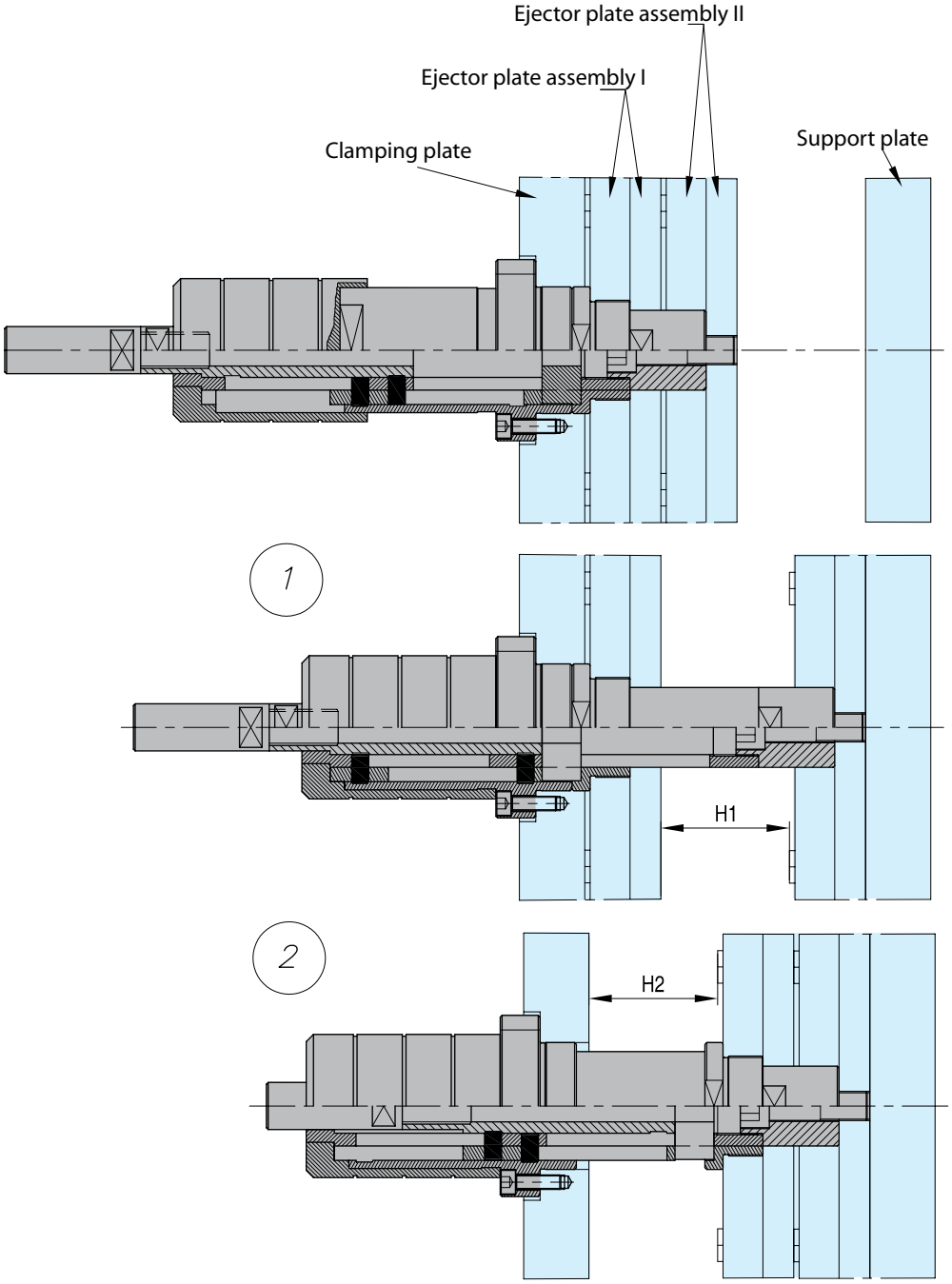

Features:

- Secured position of the ejector plates due to built-in-low-wear interlocks.
- Infinitely variable strokes
- High operational reliability of the ejector components due to forcedcontrolled stroke actions
- Simplified operations of angled and rotating mold ejection components.
- Space-saving installation in the ejector bolt area.
- The tool height remains unchanged.

Design considerations:
A detachable fixed connection between ejector bolt (FW 1850) and the machine ejector is necessary, preferably using the pneumatic rapid-action coupling PN 1680. The ejector plates cannot be pushed by return pins due to the tool closing movement! Ejector plate guidance by four guides in the ejector plates to prevent tilting. A stroke limitation is preferable to keep the ejector plates separate in the end position. Centre misalignment compensation between machine ejector and tool preferably by pneumatic rapid-action coupling PN 1680. Adapter for tool on MAP will be made, as necessary, preferably from centering flange R 19.

MILACRON®

TSTL

2-stage Ejector Top Last

Positive, precise plate control:
DME 2-stage Ejectors (TS) adapt to a number of mold base sizez and plate thicknesses. They are available in two ejection sequences: Top Last (TS) and Bottom Last (BS). Each ejection sequence is available in three sizes to accommodate most standard **DME** mold bases. The stroke range for each ejection stage is determined and fixed by the customer by cutting the Center Rod to the desired length (both TSTL and TSBL types) and by also cutting the Travel Sleeve to the desired length (TSBL type only). Once installed, the **DME** 2-stage Ejector assures positive, precise control of the sequence and distance of each stroke of the two ejector plates. Once installed, there are no adjustments that can be accidentally changed.
Benefits:
Both the first stage and second stage strokes are set independently. Easy set-up and installation. Fixed strokes cannot be tampered with or accidentally modified. Internal installation avoids interferences with water line connectors and externally mounted components. Utilizes latching mechanism similar to **DME** Internal Latch lock for smooth operation and guidance. Three sizes, for each style, to choose from to accomadate most standard **DME** mold bases. Hardened steel components for long life. **DME** 2-stage Ejectors are considerably more compact and may be centrally located, the preferred method for locating **DME** 2-stage Ejetors is in pairs, offset from mold center. For more details, assembly guidelines see www.dme.net.
Selection and design guidelines:
Select 20 mm Ø (small), 26 mm Ø (medium), or 23 mm Ø (large) 2-Stage Ejector based on the width of the mold base (large molds, thick plates or heavy load applications may require the next size assembly). Determine the travel range for each ejection stroke (first and second), being very careful not to exceed the maximum stroke specified for the chosen 2-Stage Ejector style and size. this selection is based on the specific application. In general, a minimum of two 2-stage Ejectors are required. For larger molds, thick plates, or a application where loads are near maximum, additional assemblies and/or larger assemblies may be required. An application must never exceed the maximum recommended laod values. A balanced load must be maintained to avoid cocking and binding which could cause severe overloading. Only one size of 2-stage Ejectors should be used in each mold base.

REF	Basic center rod dia	H1-Stroke 1		H2-Stroke 2		Max. mold base width	Max.load values static	Max.load values dynamic
		Min.	Max.	Min.	Max.			
TSTL 20 A	20mm	4	79	4	79	Up to 196mm, 1 TSTL 20 Up to 446mm, 2 TSTL 20	600 kg, 5,8 kN	60 kg, 0,58 kN
TSTL 26 A	26mm	6	84	6	84	Up to 446mm, 1 TSTL 26 Up to 596mm, 2 TSTL 26	6100 kg, 10,8 kN	110 kg, 1,08 kN
TSTL 32 A	32mm	8	92	8	92	Up to 596mm, 1 TSTL 32 Up to 796mm, 2 TSTL 32	2000 kg, 19,6 kN	200 kg, 1,96 kN

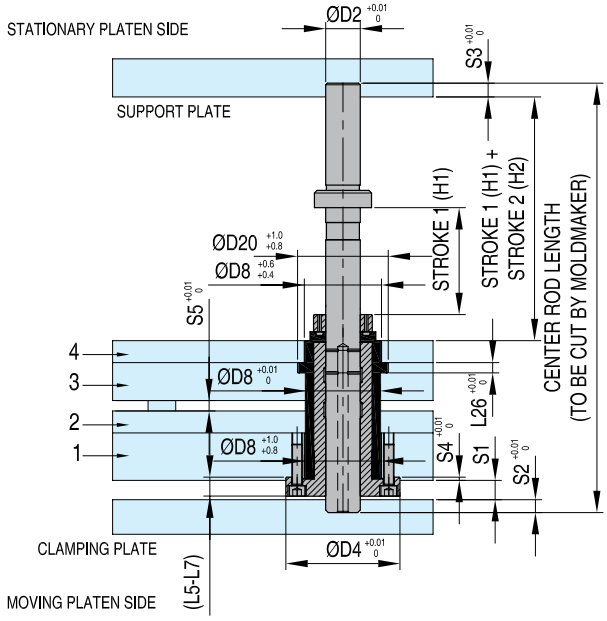

Assembly & installation guidelines
The moldmaker is responible to cut and/or grind the Center Rod to the required length prior to installation of the 2-Stage Ejector assembly into the mold base. Do not cut off more than the minimum stroke (H2). The recommended tolerance on the Center Rod length after the customer has cut the Center Rod is +0/-0,02 mm or less. Stroke 1 (H1) is reduced by cutting and/or grinding the moving plates end of both the Center Rod. Stroke 2 (H2) is reduced by cutting and/or grinding the stationary platen end of the Center Rod. Minimum H2 specified in chart does not include additional stop pins to stationary-side spacer plate. To reduce H2 even further than what is specified in chart, add stop pins. All 2-stage Ejectors in a mold must be cut to the same strokes. It is recommended that guided ejection be used. Ejector speed must be controlled, ensuring that excessive shock loading does not occur. 2-Stage Ejectors are not suitable for sever laod conditions. 2-Stage Ejectors must not be exposed to temperatures that exceed 150°C at any time. Lubricate all metal-to-metal contact areas initially and periodically as required. A good grade of moldmakers non-melting type grease for the appropriate temperature should be used.

REF	Center rod length	Stroke 1		Stroke 2		1	2	3	4	S1	S2	S3	S4	S5
		Min.	Max.	Min.	Max.									
TSTL 20 A	262,96	4	79	4	79	26	12	26	12	8	8	8	3	4,26
TSTL 26 A	285,32	6	84	6	84	26	12	26	12	10	10	10	4	10,62
TSTL 32 A	316,68	8	92	8	92	26	16	26	16	15	12	12	4	9,80

TOP LAST SEQUENCING

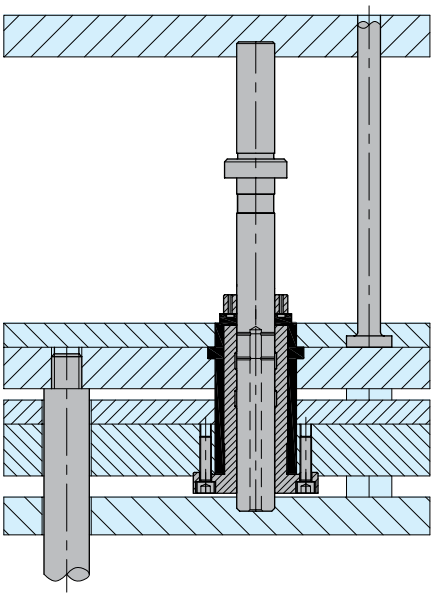

1 EJECTOR PLATES BACK

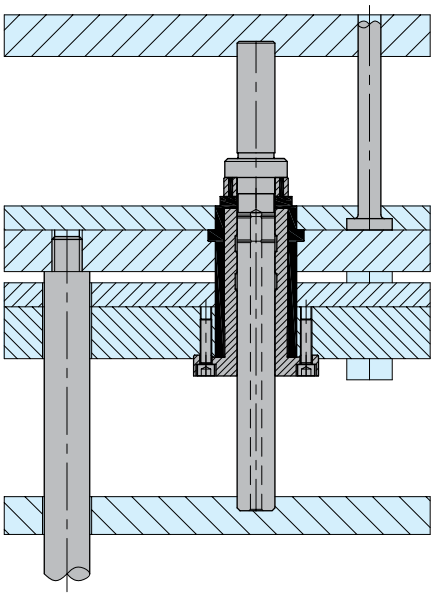

2 FIRST EJECTOR STROKE

After a predetermined amount of travel, the latch mechanism latches onto the Center Rod, thereby fixing the position of the bottom (moving platen side) ejector plate assembly.

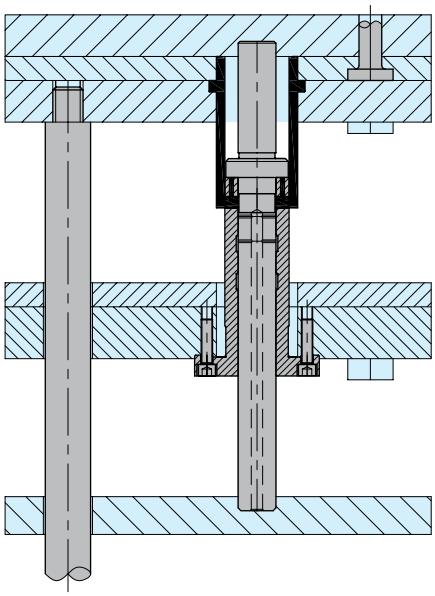

3 SECOND EJECTOR STROKE

The top (stationary platen side) ejector plate assembly continues to move through the “second” or remaining stroke until the top ejector plate assembly contacts the top of the ejector box housing.

TSTLCR

Center rod

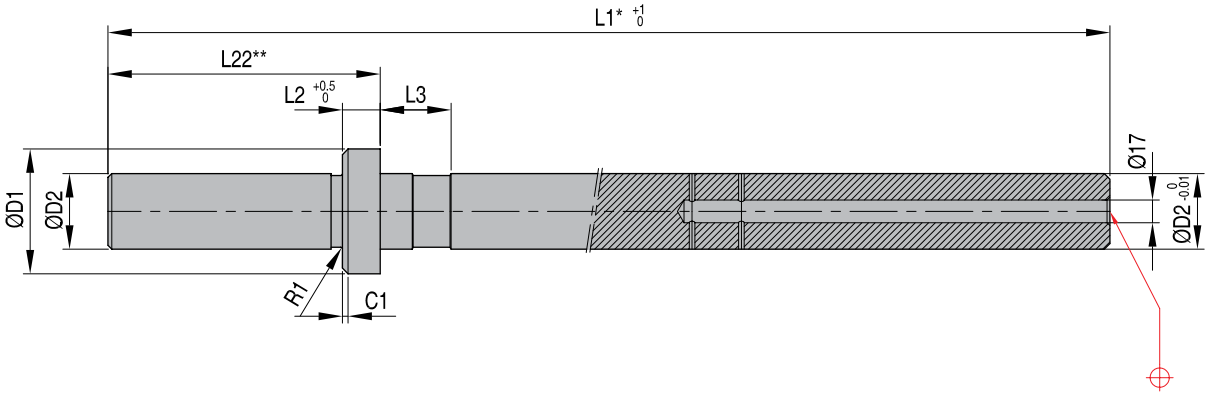

REF	D1	D2	D17	L1*	L2	L3	L22**	C1	R1
TSTL 20 CR	33	20 0 -0,01	5	265	10	18,74	72 +0,5 0	1,5	0,4
TSTL 26 CR	42	26 0 -0,01	6	290	12	22,93	76 +0,5 0	2	0,8
TSTL 32 CR	53	32 0 -0,01	6	320	15	28,25	82 +0,5 0	2,5	0,8

* Cutoff on both ends of center pin only per installation data.
** Final length must have tolerance of 0/-0,2mm after moldmaker has cut the center pin to the desired length.

TSTLTS

Travel Sleeve

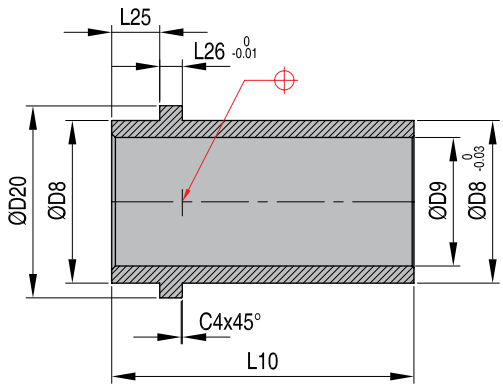

REF	D8	D9	D20	L10	L25	L26	C4
TSTL 20 TS	43	34	50,8	79,96	12,70	6,00	0,5
TSTL 26 TS	54	43	63,0	85,32	12,70	8,00	0,5
TSTL 32 TS	68	54	78,0	93,68	15,88	10,00	0,5

CAD reference point

Body For Cam Fingers — TSTLBD

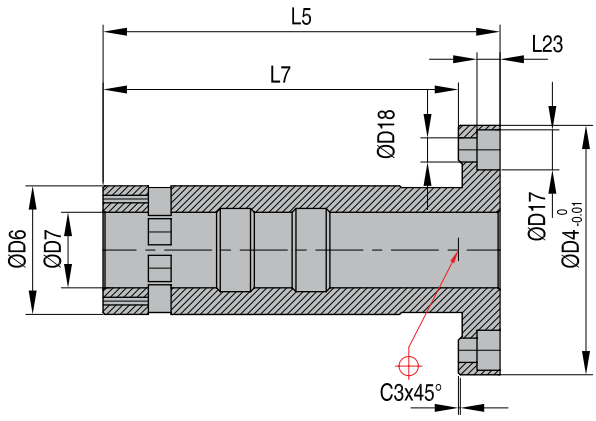

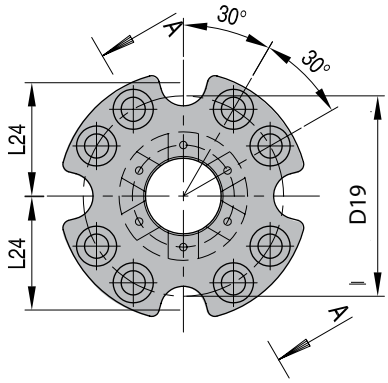

REF	D4	D6	D7	D17	D18	D19	L5	L7	L23	L24	C3
TSTL 20 BD	66	34	20	10,6	6,4	53	104	94,0	6,1	30	0,5
TSTL 26 BD	84	43	26	13,8	8,7	67	116	103,0	8,2	37	0,5
TSTL 32 BD	105	54	32	16,8	10,8	85	131	113,4	10,2	47	0,6

Cam Finger Replacement Kit (with 6 cam fingers, and 8 locking pins) — TSTLKT

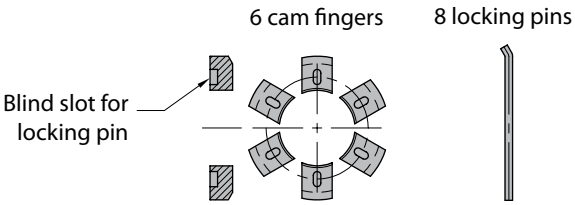

REF
TSTL 20 KT
TSTL 26 KT
TSTL 32 KT

MILACRON®

TSBL

2-stage Ejector Bottom Last

At end of second stroke, body for cam fingers must seat firmly against center rod head or spacer plate as shown.
- Tolerances depicted here are installation tolerances.
- See component detail drawings for specific component tolerances
- Refer to applicable charts for nominal dimension

REF	Basic center rod dia	Stroke 1		Stroke 2		Max.mold base width	Max.load values static	Max.load values dynamic
		Min.	Max.	Min.	Max.			
TSBL 20 A	20mm	8	82	12	82	Up to 196mm, 1 TSTL 20 Up to 446mm, 2 TSTL 20	600 kg 5,8 kN	60 kg 0,58 kN
TSBL 26 A	26mm	10	92	18	92	Up to 446mm, 1 TSTL 26 Up to 596mm, 2 TSTL 26	1100 kg 10,8 kN	110 kg 08 kN
TSBL 32 A	32mm	12	102	24	102	Up to 596mm, 1 TSTL 32 Up to 796mm, 2 TSTL 32	2000 kg 19,6 kN	200 kg 1,96 kN

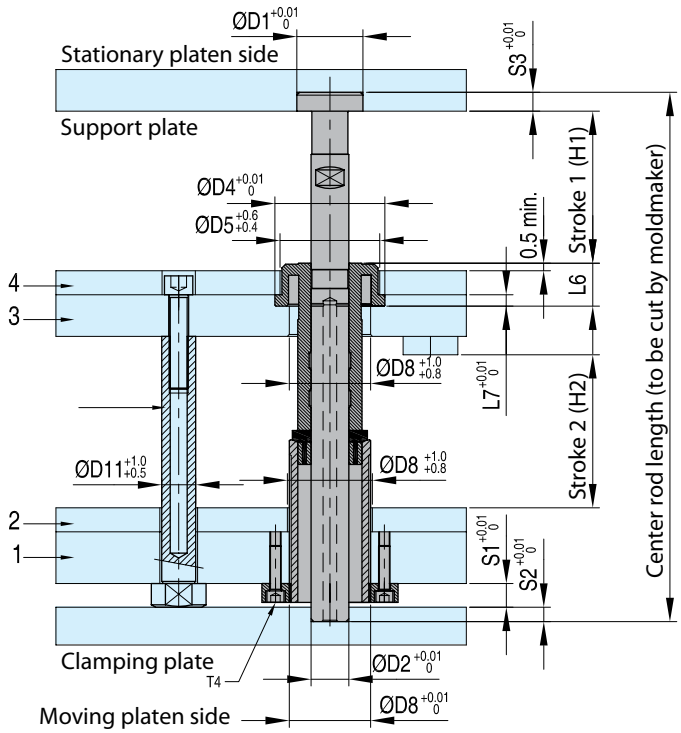

Assembly & installation guidelines:
- All 2-Stage Ejectors in a mold must be cut to the same strokes.
- It is recommended that guided ejection be used.
- Ejector speed must be controlled, ensuring that excessive shock loading does not occur.
- 2-Stage Ejectors are not suitable for severe load conditions.
- 2-Stage Ejectors must not be exposed to temperatures that exceed 150°C (300°F) at any time.
- Lubricate all metal-to-metal contact areas initially and periodically as required. A good grade of moldmakers non-melting type grease for the appropriate temperature should be used.
- A minimum of (4) Puller Pins should be used with each mold. Larger molds may require additional Puller Pins.
- The moldmaker must cut and/or grind the Puller Pins to the required length.
- Puller Pins are not included with Bottom Last Assemblies and must be ordered separately. At end of second stroke, Body for Cam Fingers must seat firmly against Center Rod head or spacer plate.
- The moldmaker must cut and/or grind the Center Rod to the required length prior to installation of the 2-Stage Ejector assembly into the mold base. Do not cut off more than the minimum stroke (H2). The recommended tolerance on the Center Rod length after the customer has cut the Center Rod is +0/-0.02mm or less.
- The moldmaker must cut and/or grind the Travel Sleeve to the required length prior to installation of the 2-Stage Ejector assembly into the mold base. Do not cut off more than the minimum stroke (H2).
- Stroke 1 (H1) is reduced by adding stop buttons to the stationary platen side spacer plate in order to restrict motion of the top (stationary platen side) ejector plate assembly. The moldmaker must manufacture a suitable set of stop buttons that are of the required height to achieve the desired stroke (H1).
- Stroke 2 (H2) is reduced by cutting and/or grinding the moving platen end of both the Center Rod and the Travel Sleeve.

CAD reference point

REF	Center rod length	H1-Stroke 1		H2-Stroke 2		1	2	3	4	S1	S2	S3	S4
		Min.	Max.	Min.	Max.								
TSBL 20 A	262,96	8	82	12	82	26	12	26	12	11	8	10	4
TSBL 26 A	285,32	10	92	18	92	26	12	26	12	14	10	12	9
TSBL 32 A	316,68	12	102	24	102	26	16	26	16	17	12	14	10

TSBL

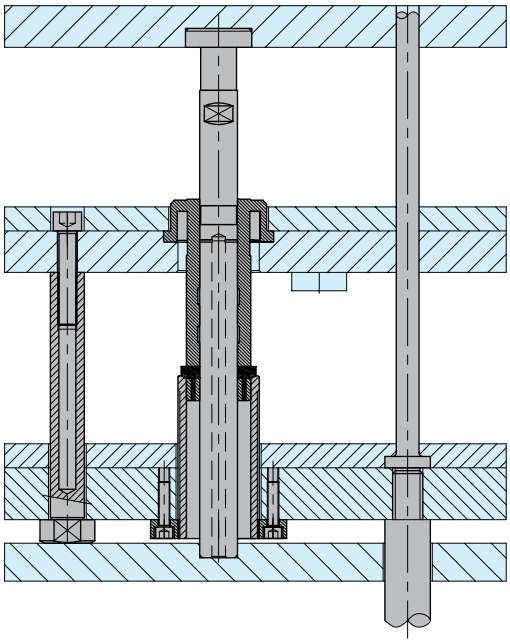

1 Ejector Plates Back

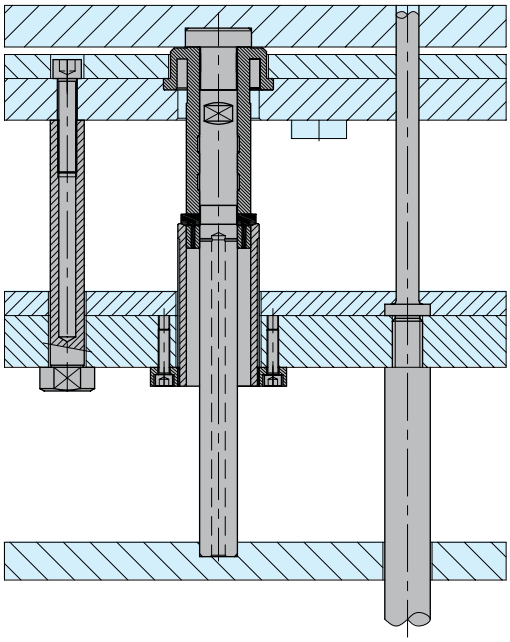

2 First Ejector Stroke

After a predetermined amount of travel, the latch mechanism latches onto the Center Rod, thereby fixing the position of the bottom (moving platen side) ejector plate assembly.

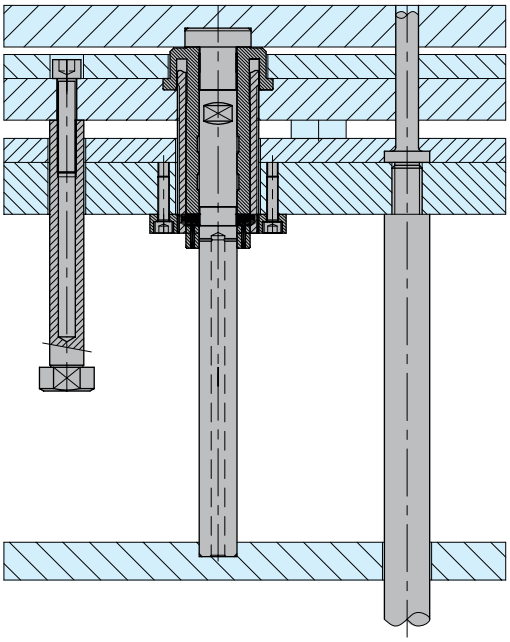

3 Second Ejector Stroke

The top (stationary platen side) ejector plate assembly continues to move through the "second" or remaining stroke until the top ejector plate assembly contacts the top of the ejector box housing.

TSBLCR

Center rod

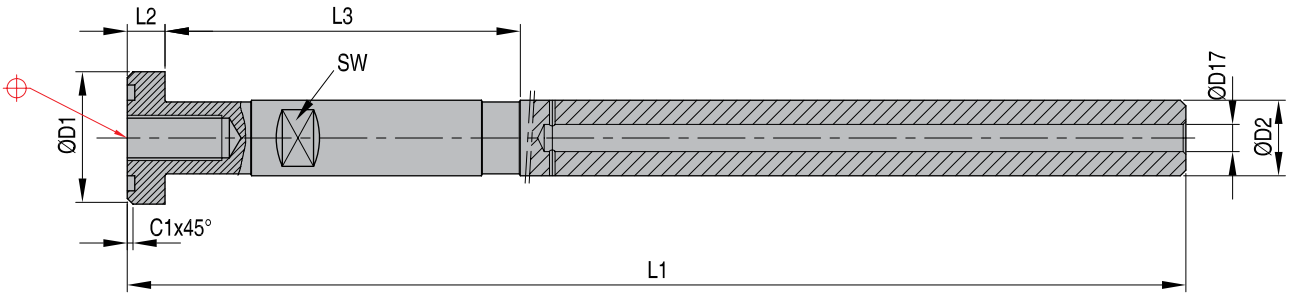

REF	D1	D2	D17	L1*	L2	L3	C1
TSBL 20 CR	$34^{0}_{-0,01}$	$20^{0}_{-0,01}$	7,2	$280^{+0,5}_{0}$	$10^{+0,02}_{0}$	93,66	1,0
TSBL 26 CR	$44^{0}_{-0,01}$	$26^{0}_{-0,01}$	8,5	$314^{+0,5}_{0}$	$12^{+0,02}_{0}$	105,67	1,0
TSBL 32 CR	$58^{0}_{-0,01}$	$32^{0}_{-0,01}$	10,5	$354^{+0,5}_{0}$	$14^{+0,02}_{0}$	118,18	1,5

* Cutoff on both ends of center pin only per installation data.
** Final length must have tolerance of 0/-0,2mm after moldmaker has cut the center pin to the desired length.

TSBLTS

Travel Sleeve

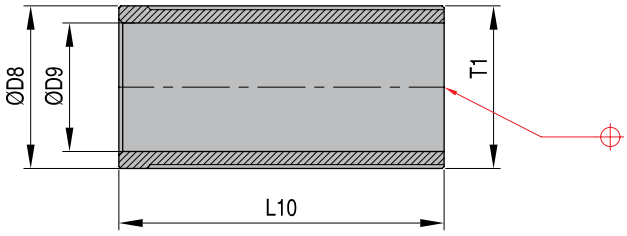

REF	D8	D9	L10	T1
TSBL 20 TS	$43^{0}_{-0,03}$	34	$86^{+0,2}_{0}$	M43,5x1,25
TSBL 26 TS	$54^{0}_{-0,03}$	43	$94^{+0,2}_{0}$	M54,5x1,25
TSBL 32 TS	$68^{0}_{-0,03}$	54	$105^{+0,2}_{0}$	M68,6x1,5

Locking Ring — TSBLLR

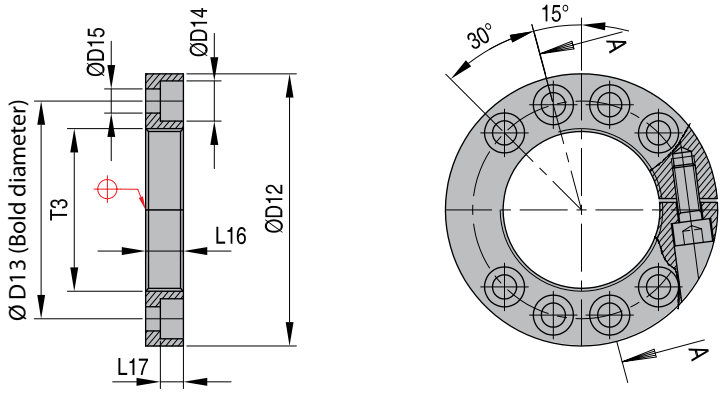

REF	D12	D13	D14	D15	L16	L17	T3
TSBL 20 LR	72,0	57,4	10,6	6,4	10,0	6,0	M43,2 x 1,25
TSBL 26 LR	90,0	72,0	13,7	8,6	13,0	8,1	M54,2 x 1,25
TSBL 32 LR	112,0	90,0	16,8	10,8	16,0	10,1	M68,25 x 1,5

Body For Cam Fingers — TSBLBD

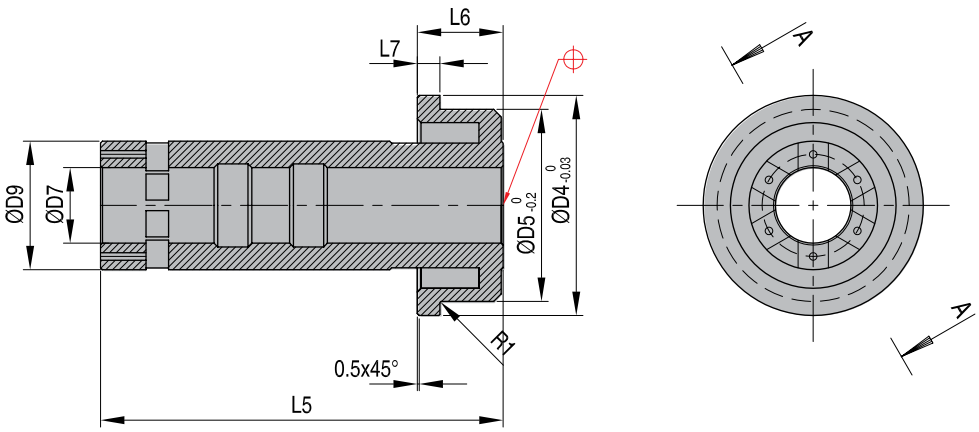

REF	D4	D5	D6	D7	L5	L6	L7	C2	R1
TSBL 20 BD	58,2	50,8	34,0	20,0	106,46	22,7	6,0	0,3	0,4
TSBL 26 BD	70,0	62,8	43,0	26,0	121,22	22,7	6,0	0,4	0,4
TSBL 32 BD	87,0	78,0	54,0	32,0	139,7	28,88	7,0	0,5	0,4

TSBLKT

Cam Finger Replacement Kit (with 6 cam fingers, and 8 locking pins)

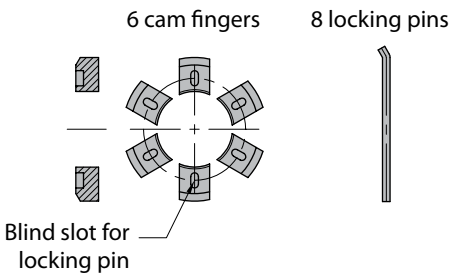

REF
TSBL 20 KT
TSBL 26 KT
TSBL 32 KT

TSBLPP

Puller Pin

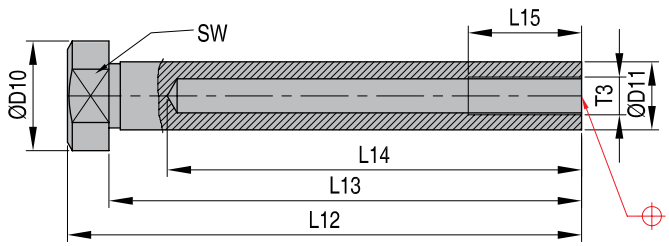

REF	D10	D11	L12	L13	L14	L15	SW	T3
TSBL 20 PP	29	18	136	125	107	30	26	M10
TSBL 26 PP	34	21	153	139	120	40	30	M12
TSBL 32 PP	43	26	171	154	138	50	36	M16

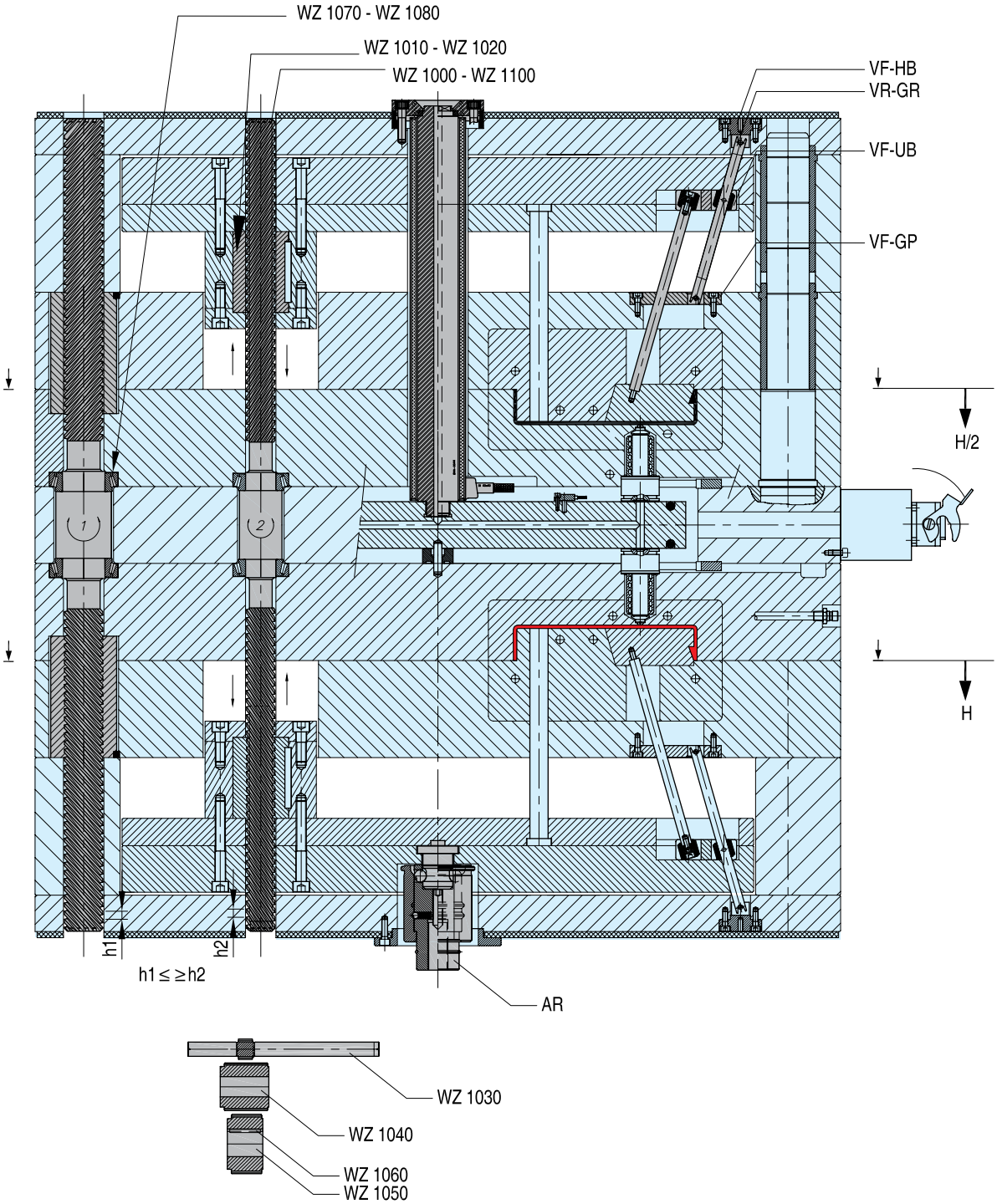
WZ 1070 - WZ 1080
WZ 1010 - WZ 1020
WZ 1000 - WZ 1100
VF-HB
VR-GR
VF-UB
VF-GP
H/2
H
h1
h2
h1 ≤ ≥h2
AR
WZ 1030
WZ 1040
WZ 1060
WZ 1050

WZ1000

Coarse pitch axles Mat.: W1.0715 max 570N/mm²

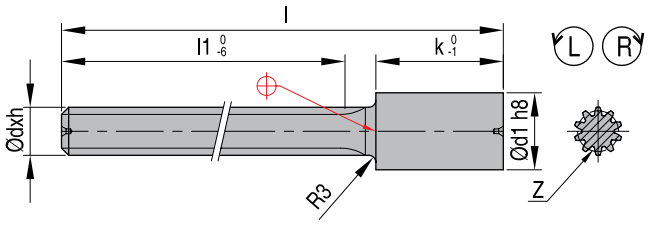

REF	d	h	l1	d1h8*	l	k	z
WZ1000	**28**	**80**	**400**	40	525	93	9
WZ1000	**28**	**160**	**400**	40	525	93	11
WZ1000	**38**	**120**	**450**	48	575	93	10
WZ1000	**38**	**200**	**450**	48	575	93	12
WZ1000	**48**			**coming soon!**			

* Special sizes upon request

WZ1015

Coarse pitch nuts Mat.: 2.0550 Brass

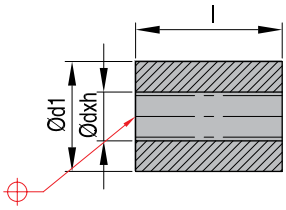

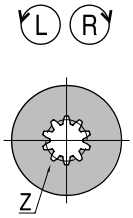

REF	d	h	d1	l	z
WZ1015	**28**	**80**	74	100	9
WZ1015	**28**	**160**	74	100	11
WZ1015	**38**	**120**	74	120	10
WZ1015	**38**	**200**	74	120	12
WZ1015	**48**		96	120	

Coarse pitch axles

Mat.: ~1.0727~980N/mm²

WZ1100

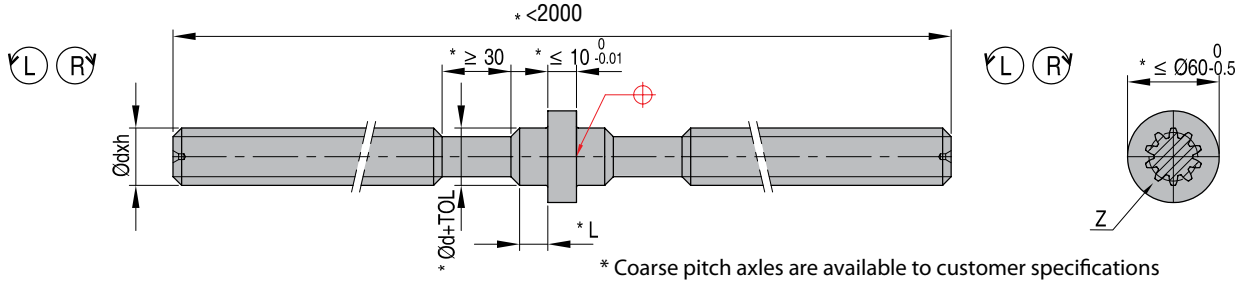

* Coarse pitch axles are available to customer specifications

REF	d	h	z
WZ1100	28	80 LR	9
WZ1100	28	80 RL	9
WZ1100	28	120 LR	10
WZ1100	28	120 RL	10
WZ1100	28	160 LR	11
WZ1100	28	160 RL	11

REF	d	h	z
WZ1100	38	120 LR	10
WZ1100	38	120 RL	10
WZ1100	38	160 LR	11
WZ1100	38	160 RL	11
WZ1100	38	200 LR	12
WZ1100	38	200 RL	12

Pinion shafts

Mat.: ~1.2767~830N/mm²

WZ1030

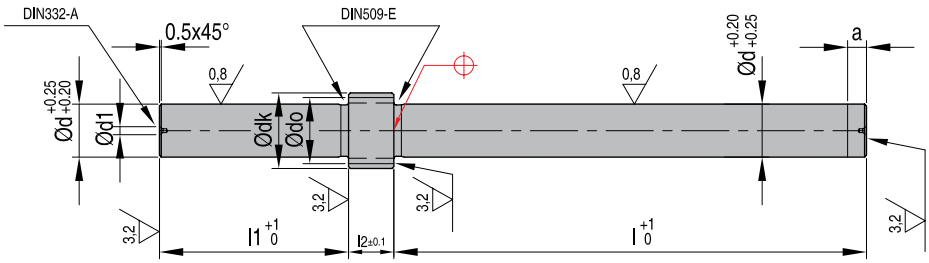

REF	d	m	d0	dk	d1	l	l1	l2	a	z
WZ1030	14	1,25	17,50	20,00	4,0	125	50	12	5	14
WZ1030	15	1,25	18,75	21,25	4,0	125	50	12	5	15
WZ1030	16	1,25	20,00	22,50	4,0	125	50	14	5	16
WZ1030	17	1,25	21,00	24,00	5,0	160	63	15	6	14
WZ1030	18	1,25	21,25	23,75	4,0	125	50	14	5	17
WZ1030	19	1,25	22,50	25,00	4,0	125	50	14	5	18
WZ1030	20	1,5	24,00	27,00	5,0	160	63	15	6	16
WZ1030	22	1,25	25,00	27,50	5,0	125	50	16	5	20
WZ1030	22	1,5	27,00	30,00	5,0	160	63	16	6	18
WZ1030	25	1,5	30,00	33,00	5,0	160	63	20	6	20
WZ1030	29	2	34,00	38,00	6,3	200	63	18	7	17

REF	d	m	d0	dk	d1	l	l1	l2	a	z
WZ1030	32	1,5	37,50	40,5	5,0	160	63	20	6	25
WZ1030	32	2	38,00	42,00	6,3	200	63	18	7	19
WZ1030	38	2,5	45,00	50,00	8,0	225	80	20	9	18
WZ1030	43	2,5	50,00	55,00	8,0	225	80	20	9	20
WZ1030	44	2	50,00	54,00	6,3	200	63	20	7	25
WZ1030	48	2,5	55,00	60,00	8,0	225	80	24	9	22
WZ1030	50	2	56,00	60,00	6,3	200	63	20	7	28
WZ1030	54	2	60,00	64,00	6,3	200	63	22	7	30
WZ1030	56	2,5	62,50	67,50	8,0	225	80	24	9	25
WZ1030	68	2,5	75,00	80,00	8,0	225	80	26	9	30

WZ1040

Spur-toothed wheels

Mat.: ~1.0503 (C45)~690N/mm²

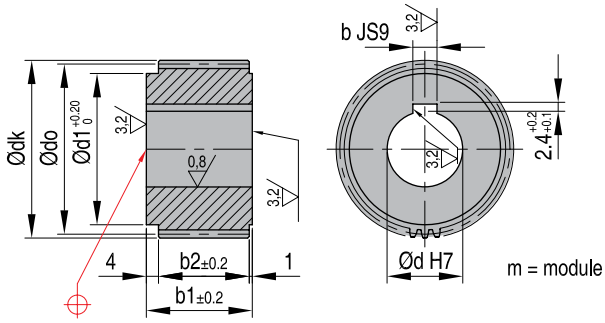

REF d m z	d0	dk	b JS9	b1	b2	d1
WZ1040 25-1,25-45	56,25	58,75	8	35	30	50
WZ1040 25-1,25-50	62,50	65,00	8	35	30	50
WZ1040 25-1,25-60	75,00	77,50	8	35	30	50
WZ1040 30-1,25-45	56,25	58,75	8	45	40	50
WZ1040 30-1,25-50	62,50	65,00	8	45	40	50
WZ1040 30-1,25-60	75,00	77,50	8	45	40	50
WZ1040 30-1,25-70	87,50	90,00	8	45	40	50
WZ1040 30-1,5-45	67,50	70,50	10	45	40	60
WZ1040 30-1,5-50	75,00	78,00	10	45	40	60
WZ1040 30-1,5-60	90,00	93,00	10	45	40	60
WZ1040 30-1,5-70	105,00	108,00	10	45	40	60
WZ1040 35-1,5-45	67,50	70,50	10	50	45	60
WZ1040 35-1,5-50	75,00	78,00	10	50	45	60
WZ1040 35-1,5-55	82,50	85,50	10	50	45	60
WZ1040 35-1,5-60	90,00	93,00	10	50	45	60
WZ1040 35-1,5-70	105,00	108,00	10	50	45	60

REF d m z	d0	dk	b JS9	b1	b2	d1
WZ1040 35-2-40	80,00	84,00	10	50	45	70
WZ1040 35-2-45	90,00	94,00	10	50	45	70
WZ1040 35-2-50	100,00	104,00	10	50	45	70
WZ1040 35-2-55	110,00	114,00	10	50	45	70
WZ1040 35-2-60	120,00	124,00	10	50	45	70
WZ1040 35-2-70	140,00	144,00	10	50	45	70
WZ1040 47-2-40	80,00	84,00	10	65	60	70
WZ1040 47-2-45	90,00	94,00	10	65	60	70
WZ1040 47-2-50	100,00	104,00	10	65	60	70
WZ1040 47-2-60	120,00	124,00	10	65	60	70
WZ1040 47-2-70	140,00	144,00	10	65	60	70
WZ1040 47-2,5-40	100,00	105,00	10	65	60	70
WZ1040 47-2,5-45	112,50	117,50	10	65	60	70
WZ1040 47-2,5-50	125,00	130,00	10	65	60	70
WZ1040 47-2,5-60	150,00	155,00	10	65	60	70
WZ1040 47-2,5-70	175,00	180,00	10	65	60	70

WZ1050

Intermediate gear wheels

Mat.: ~1.0503 (C45)~690N/mm²

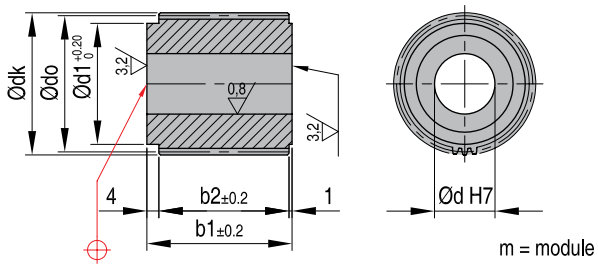

REF d m z	d0	dk	b1	b2	d1
WZ1050 10-1,25-16	20,00	22,50	34	29	16
WZ1050 10-1,25-17	21,25	23,75	34	29	16
WZ1050 10-1,25-18	22,50	25,00	34	29	16
WZ1050 10-1,25-20	25,00	27,50	34	29	16
WZ1050 10-1,25-25	31,25	33,75	34	29	16
WZ1050 10-1,5-16	24,00	27,00	36	31	19
WZ1050 10-1,5-18	27,00	30,00	36	31	19
WZ1050 10-1,5-20	30,00	33,00	36	31	19
WZ1050 10-1,5-25	37,50	40,50	36	31	19
WZ1050 10-2-16	32,00	36,00	38	33	26

REF d m z	d0	dk	b1	b2	d1
WZ1050 10-2-18	36,00	40,00	38	33	26
WZ1050 10-2-20	40,00	44,00	38	33	26
WZ1050 10-2-25	50,00	54,00	38	33	26
WZ1050 10-2-30	60,00	64,00	38	33	26
WZ1050 12-2,5-16	40,00	45,00	40	35	34
WZ1050 12-2,5-18	45,00	50,00	40	35	34
WZ1050 12-2,5-20	50,00	55,00	40	35	34
WZ1050 12-2,5-25	62,50	67,50	40	35	34
WZ1050 12-2,5-30	75,00	80,00	40	35	34

Woodruff keys

Mat.: ~1.0503 (C45)~DIN 6885

WZ1060

Woodruff key installation

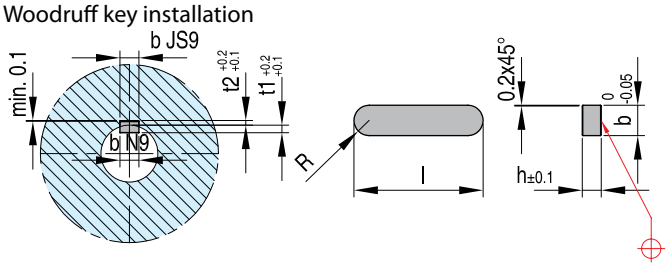

REF	b	h	l	t1	t2
WZ1060	5	5	14	3,0	2,3
WZ1060	8	5	18	2,6	2,4
WZ1060	8	5	34	2,6	2,4
WZ1060	8	5	40	2,6	2,4
WZ1060	10	6	40	3,6	2,4
WZ1060	10	6	45	3,6	2,4

REF	b	h	l	t1	t2
WZ1060	10	6	50	3,6	2,4
WZ1060	10	6	60	3,6	2,4
WZ1060	10	6	65	3,6	2,4

Taper roller bearings

Mat.: Steel-DIN 720

WZ1070

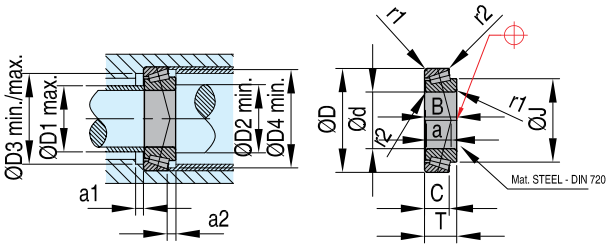

REF D d	B	C	T	r1	r2	a	D1	D2	D3min	D3max	D4	a1	a2
WZ1070 47-20	14	12,0	15,25	1,5	0,5	11	27	26	40	41	43	2	3,0
WZ1070 47-25	15	11,5	15,00	1,0	0,3	12	30	30	40	42	44	3	3,5
WZ1070 52-28	16	12,0	16,00	1,5	0,5	13	33	34	45	46	49	3	4,0
WZ1070 55-30	17	13,0	17,00	1,5	0,5	14	35	36	48	49	52	3	4,0
WZ1070 58-32	17	13,0	17,00	1,5	0,5	14	38	38	50	52	55	3	4,0
WZ1070 62-35	18	14,0	18,00	1,5	0,5	15	40	41	54	56	59	4	4,0
WZ1070 68-40	19	14,5	19,00	1,5	0,5	15	46	46	60	62	65	4	4,5

REF D d	B	C	T	r1	r2	a	D1	D2	D3min	D3max	D4	a1	a2
WZ1070 75-45	20	15,5	20,00	1,5	0,5	17	51	51	67	69	72	4	4,5
WZ1070 80-50	20	15,5	20,00	1,5	0,5	18	56	56	72	74	77	4	4,5
WZ1070 90-55	23	17,5	23,00	2,0	0,8	20	63	62	81	83	86	4	5,5
WZ1070 95-60	23	17,5	23,00	2,0	0,8	21	67	67	85	88	91	4	5,5
WZ1070 100-65	23	17,5	23,00	2,0	0,8	23	72	72	90	93	97	4	5,5
WZ1070 110-70	25	19,0	25,00	2,0	0,8	24	78	77	98	103	105	5	6,0

Ball bearings

Mat.: Steel-DIN 625

WZ1080

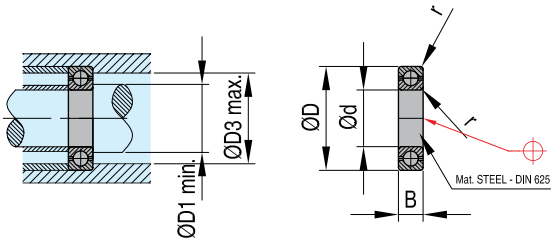

REF D d	B	r	D1	D2
WZ1080 26-10	8	0,5	12,0	24,0
WZ1080 28-12	8	0,5	14,0	26,0
WZ1080 32-15	9	0,5	17,0	30,0
WZ1080 35-17	10	0,5	19,0	33,0
WZ1080 42-20	12	1,0	23,2	38,8
WZ1080 47-25	12	1,0	28,2	43,8
WZ1080 55-30	13	1,5	34,6	50,4

REF D d	B	r	D1	D2
WZ1080 62-35	14	1,5	39,6	57,4
WZ1080 68-40	15	1,5	44,6	63,4
WZ1080 75-45	16	1,5	49,6	70,4
WZ1080 80-50	16	1,5	54,6	75,4
WZ1080 90-55	18	2,0	61,0	84,0
WZ1080 95-60	18	2,0	66,0	89,0
WZ1080 100-65	18	2,0	71,0	94,0

Info

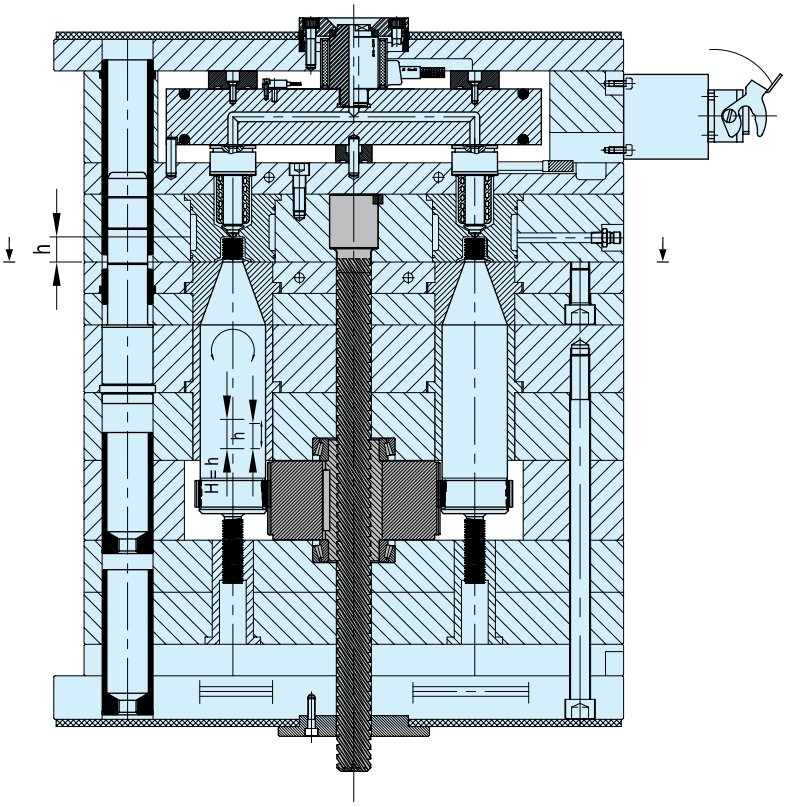

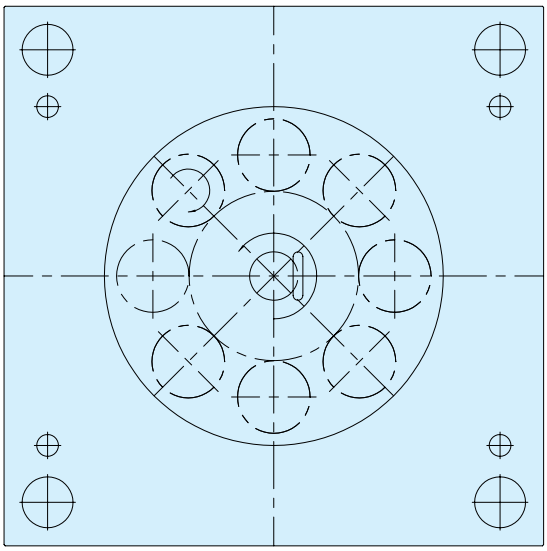

Info

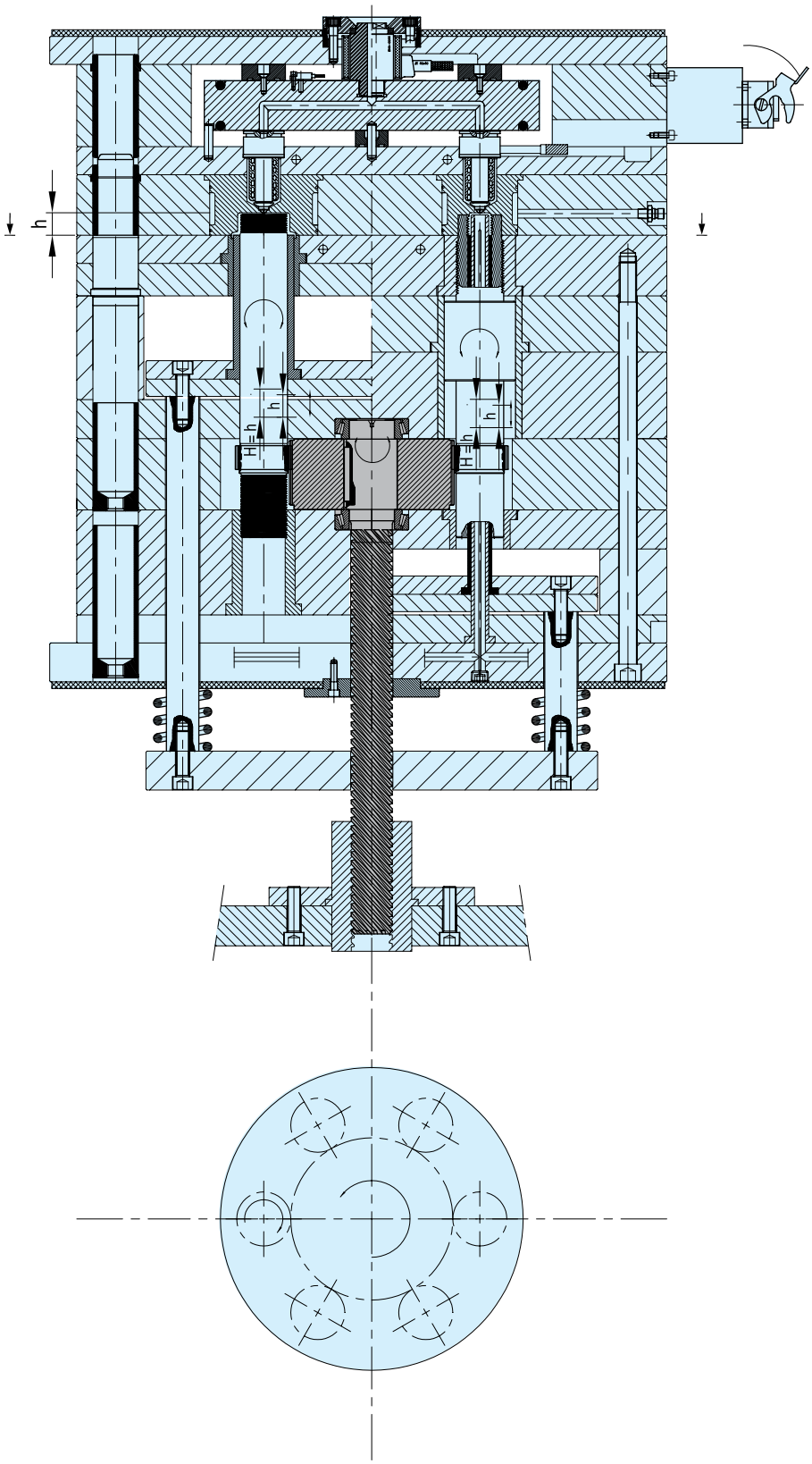

HG

Helical gear stack mold systems

Helical Gear Components	
	Helical Gear Shaft
	Nut Housing Blank
	Nylon Nut
	Tapered Roller Bearing
	Roller Bearing Housing
	Nut Housing End Cap
	Alignment Rod
	Shipping Strap

Helical gear stack mold systems

HG

Decades of design and engineering expertise at your service

DME has decades of design and engineering expertise to assist you in design and development of stack molds.

Our Helical Gears are the industry standard with decades of proven applications in a wide variety of applications and plastic resins. Our Helical Gear housings and assemblies greatly simplify the design and development of stack molds, leaving you more time to concentrate on the core and cavity details. Off-the-shelf components are available when you need them.
DME quality ensures reliability and interchangeability of all components.

DME engineers and designers are available to assist you with your questions whether you are building your first stack mold or challenging multilevel stack molds with complex mold actions.
DME even offers complete design services (up to the cores and cavities) for those needing to off-load design and engineering during peak workloads.

With **DME**, you can order individual components, complete assemblies ready for installation, or complete systems including design and engineering.

DME Helical Gear housings and assemblies greatly simplify the design and development of stack molds - leaving you more time to concentrate on core and cavity details.

Mold closed

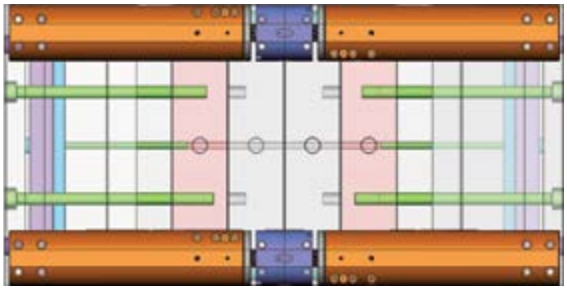

Mold open

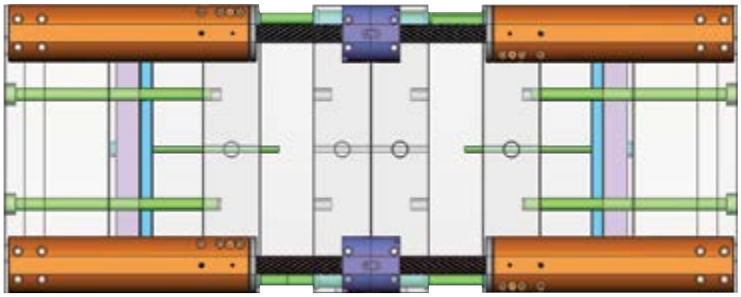

Helical Gear Stack Mold Centering Devices ensure that both parting lines open the same distance simultaneously.

HG

Helical gear stack mold systems

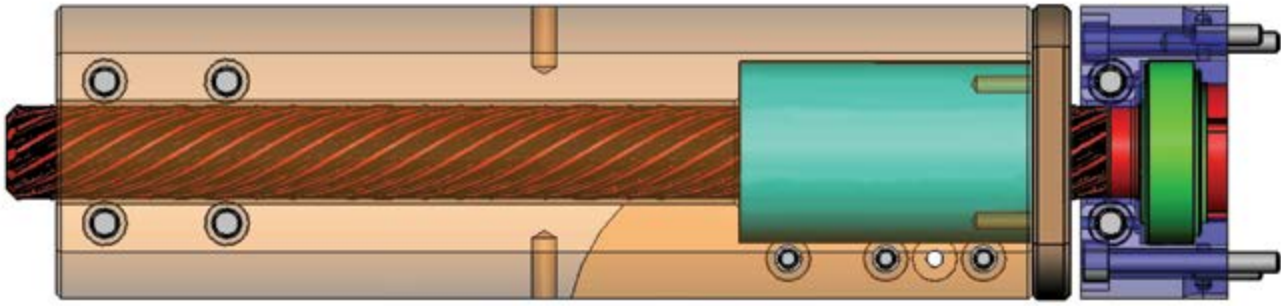

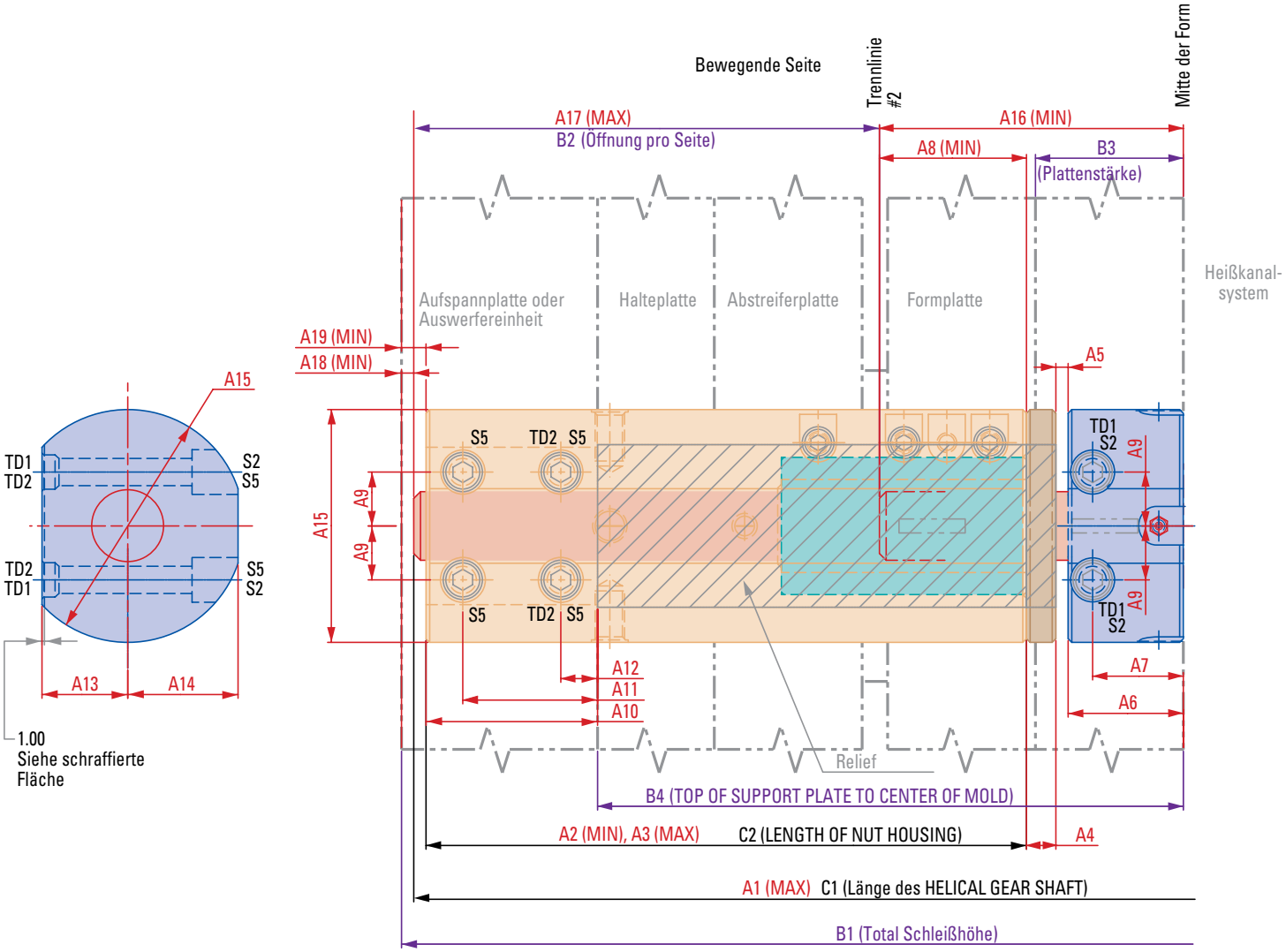

Mounting Screws and Dowels

	HG28	HG38
S2 Socket head cap screw	M10 x 75mm	M12 x 110mm
S5 Socket Head Cap Screw	M10 x 75mm	M12 x 110mm
TD1 Tubular Dowel	Ø14mm x 10mm	Ø18mm x 12mm
TD2 Tubular Dowel	Ø14mm x 10mm	Ø18mm x 12mm

Helical gear stack mold systems

HG

HELICAL GEAR SHAFT (uncut and special)

TAPERED ROLLER BEARING

Roller Bearing Housing

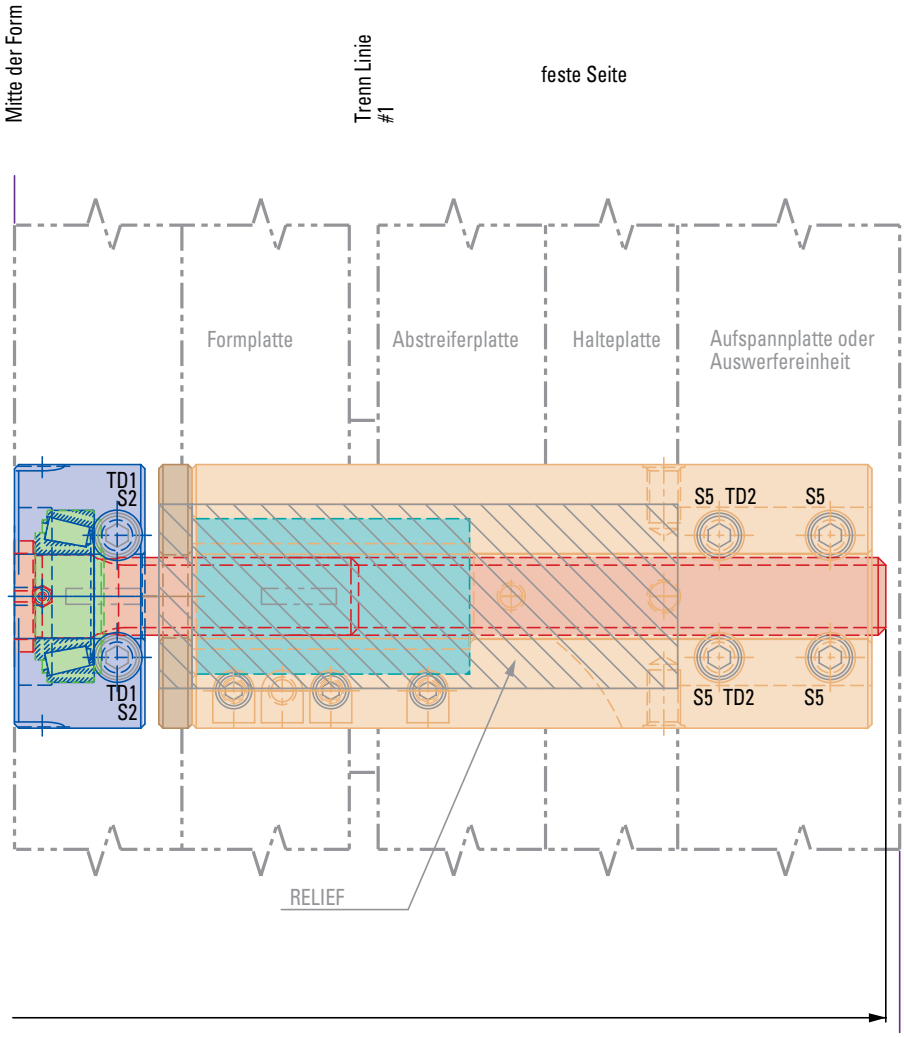

Constant Dimensions

	HG28-1000	HG38-1200	HG38-1500
a1	1000	1200	1500
A2	245	296	296
A3	436	520	670
A4	12	15	15
A5	5	5	5
A6	47	60	60
A7	37	48	48
A8	60	75	75
A9	22	29	29
A10	70	90	90
A11	55	70	70
A12	15	20	20
A13	35	45	45
A14	45	57	57
A15	95	120	120
A16	124	155	155
A17	376	445	595
A18	5	5	5
A19	5	5	5

Calculated Dimensions

	HG28	HG38
C1		
C2		

C1 = 2 x (A16 + B2)
IF: C1 > (B1 – 10)
THEN: Gear Shaft is too long.
Increase B1 (total shut height).

C2 = (B4 + A10) – (A4 + A5 + A6)
IF: C2 < A2
THEN: Nut Housing is too short.
Increase B1 (total shut height).
IF: C2 > A3
THEN: Need special Nut Housing, longer than A3.
IF: C2 > 1/2 x B1 – (A4 + A5 + A6 + A19)
THEN: Nut Housing is too long.
Increase B1 (total shut height).

Input Data

	HG28	HG38
B1		
B2		
B3		
B4		

Restrictions
IF: B4 ≥ 1/2 x B1
THEN: Impossible configuration.
Decrease B4 or increase B1.
IF: B3 < A6
THEN: Impossible configuration.
Increase B3.
IF: B2 ≥ 1/2 x B1
THEN: Impossible configuration.
Decrease B2.

Configuration Calculation Sheet available from **DME** Applications Engineering to help determine the lengths of the Helical Gear Shaft and Nut Housing based on mold size, and required parting line openings per side.

MILACRON®

AEP

Accelerated ejectors Pin-Type - MINI

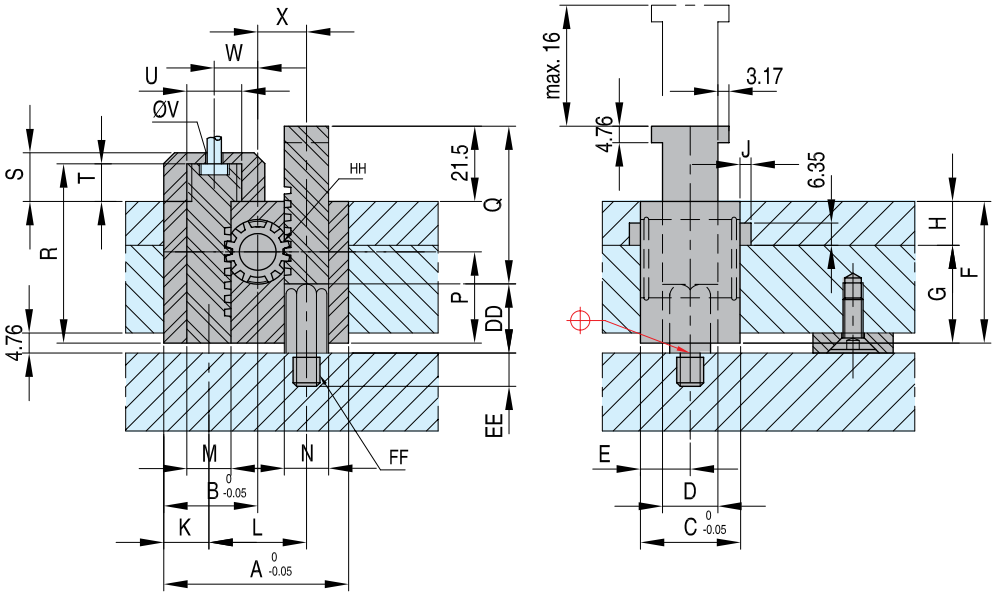

																	Replacement parts	
REF	A	B	C	D	E	F	G	H	J	K	L	M	N	P	Q	HH Cogs	Springs for	REF
AEP 10	53,97	26,97	28,57	15,87	14,28	40,64	27,94	1/2"	3,17	12,95	28,02	12,70	12,70	26,16	45,29	14	**AEP-10**	**AE 18**
AEP 20	73,03	36,50	41,28	28,57	20,64	47,63	31,75	5/8"	4,75	15,87	41,28	19,05	19,05	25,81	52,39	16	**AEP-20**	**AE 28**
REF	R	S	T	U	V	W	X	Y	Z	AA	BB	CC	DD	EE	FF	GG		
AEP 10	51,44	13,97	10,80	5/8"-18	3,18	12,47	14,0	6,35	41,28	15/16"	6,35	6,35	19,05	9,52	5/16"-18	3/8"		
AEP 20	60,33	17,27	12,70	1 1/8"-12	6,35	15,87	20,64	6,35	60,03	1 3/8"	4,76	6,35	18,29	12,7	3/8"-16	9/16"		

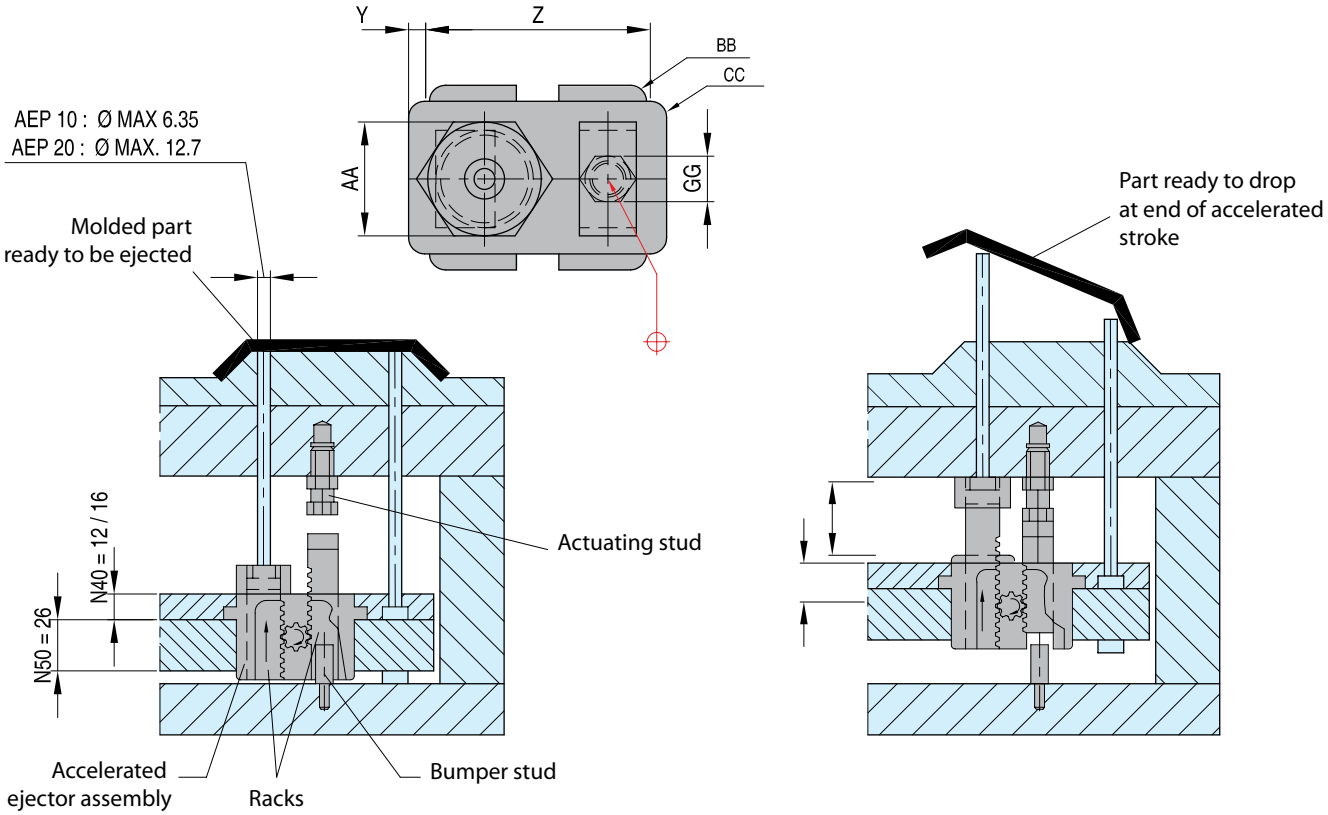

Accelerated ejectors Bumper-Type - MINI

AEB

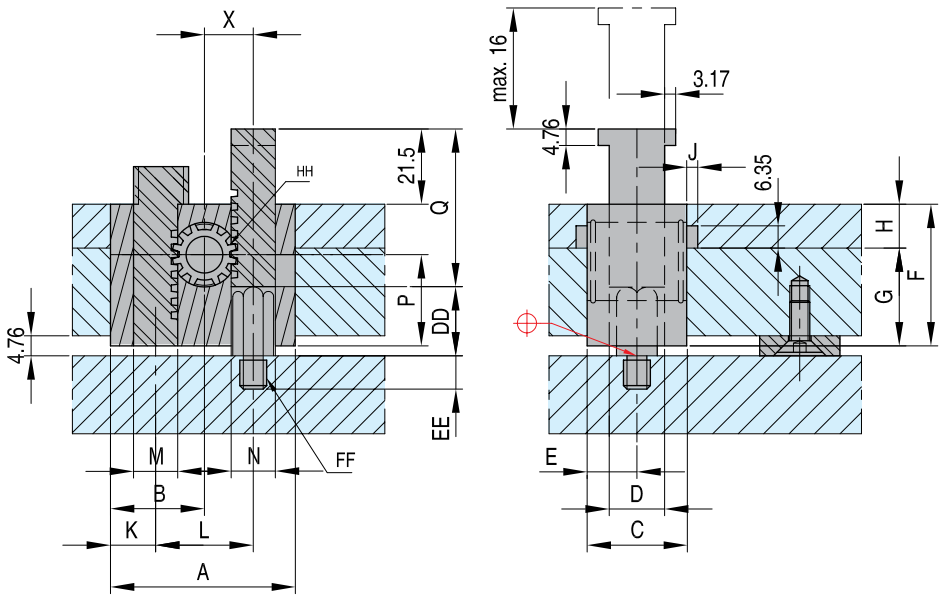

																	Replacement parts	
REF	A	B	C	D	E	F	G	H	J	K	L	M	N	P	Q	HH Cogs	Springs for	REF
AEB 10	53,97	26,97	28,57	15,87	14,28	40,64	27,94	1/2"	3,17	12,95	28,02	12,7	12,7	26,16	45,29	14	**AEB-10**	**AE 18**
AEB 20	73,03	36,5	41,28	28,57	20,64	47,63	31,75	5/8"	4,75	15,87	41,28	19,05	19,05	25,81	52,39	16	**AEB-20**	**AE 28**
REF	R	S	T	U	V	W	X	Y	Z	AA	BB	CC	DD	EE	FF	GG		
AEB 10	-	-	-	-	-	-	14,0	6,35	41,28	15/16"	6,35	6,35	19,05	9,52	5/16"-18	3/8"		
AEB 20	-	-	-	-	-	-	20,64	6,35	60,03	1 3/8"	4,76	6,35	18,29	12,7	3/8"-16	9/16"		

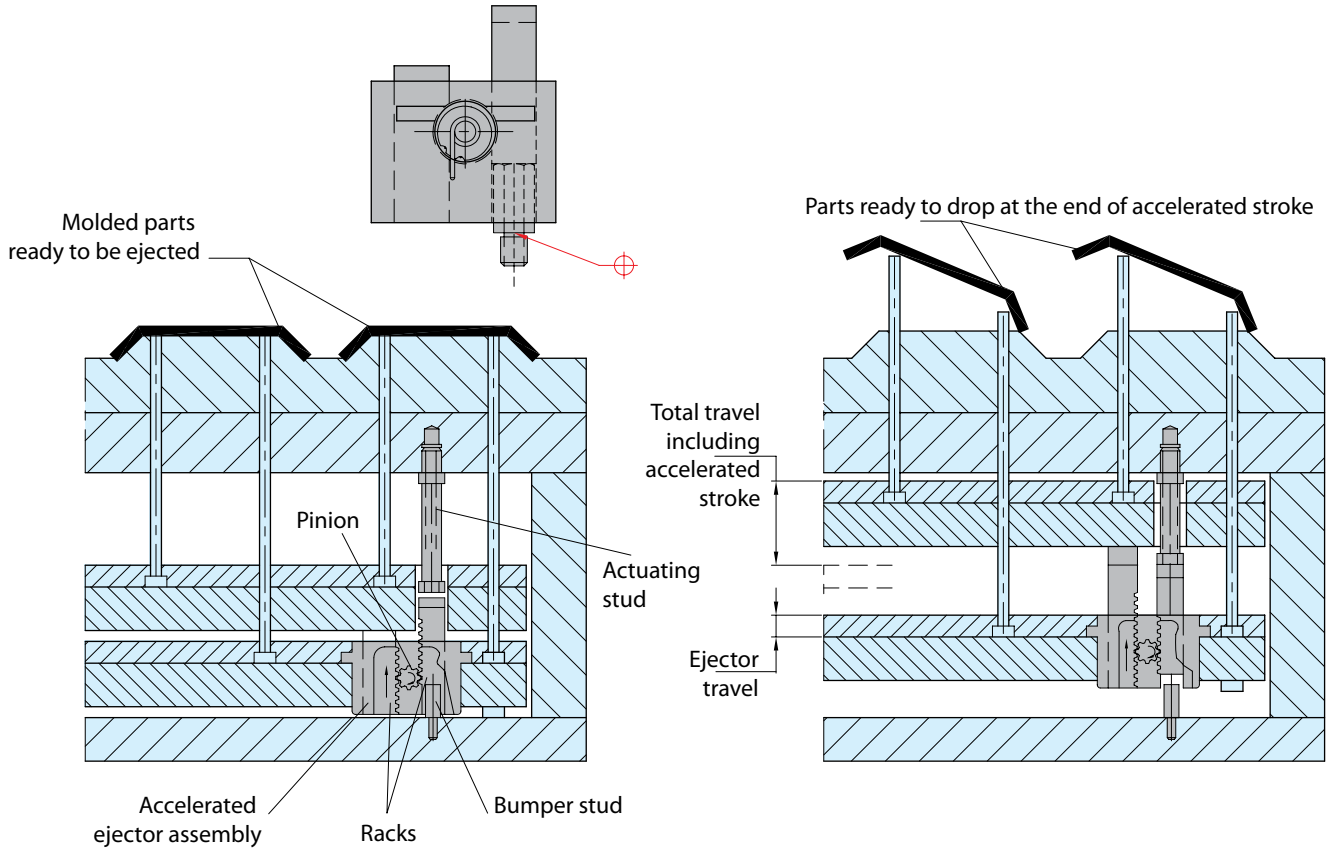

ER

Early ejector return assembly

Operation facilities:
- injection and diecasting molds
- prevents damage of mold cavities and ejectors
- valve plates
- molds with multistage mold releasing movement
- Early ejector return assemblies save you time and money.
- Unique design permits low costs.
- Long life due to precise parts and hardened surfaces.
- Prevents valuable mold components from mechanical damage.

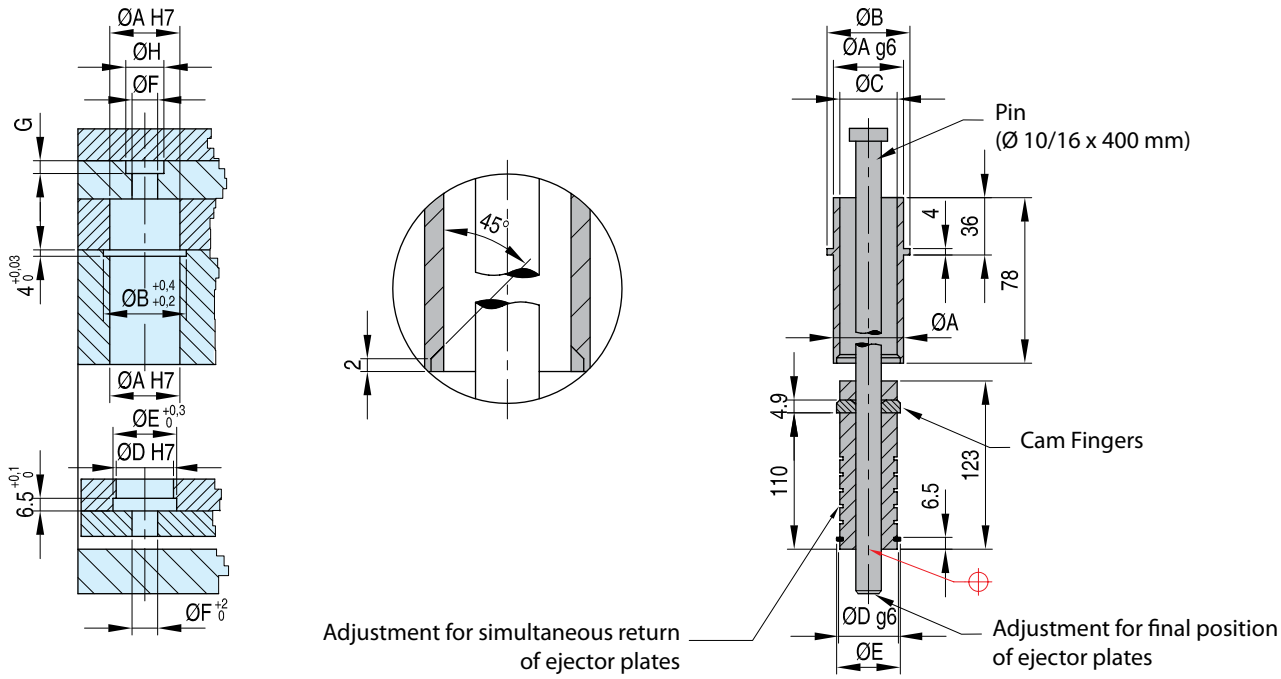

REF	A	B	C	D	E	F	G	H
ER 100 E	32	35	24,2	24	27	10	5	17
ER 101 E	42	46	32,2	32	36	16	7	24

Dimensions for installation in **DME** standard molds

ER

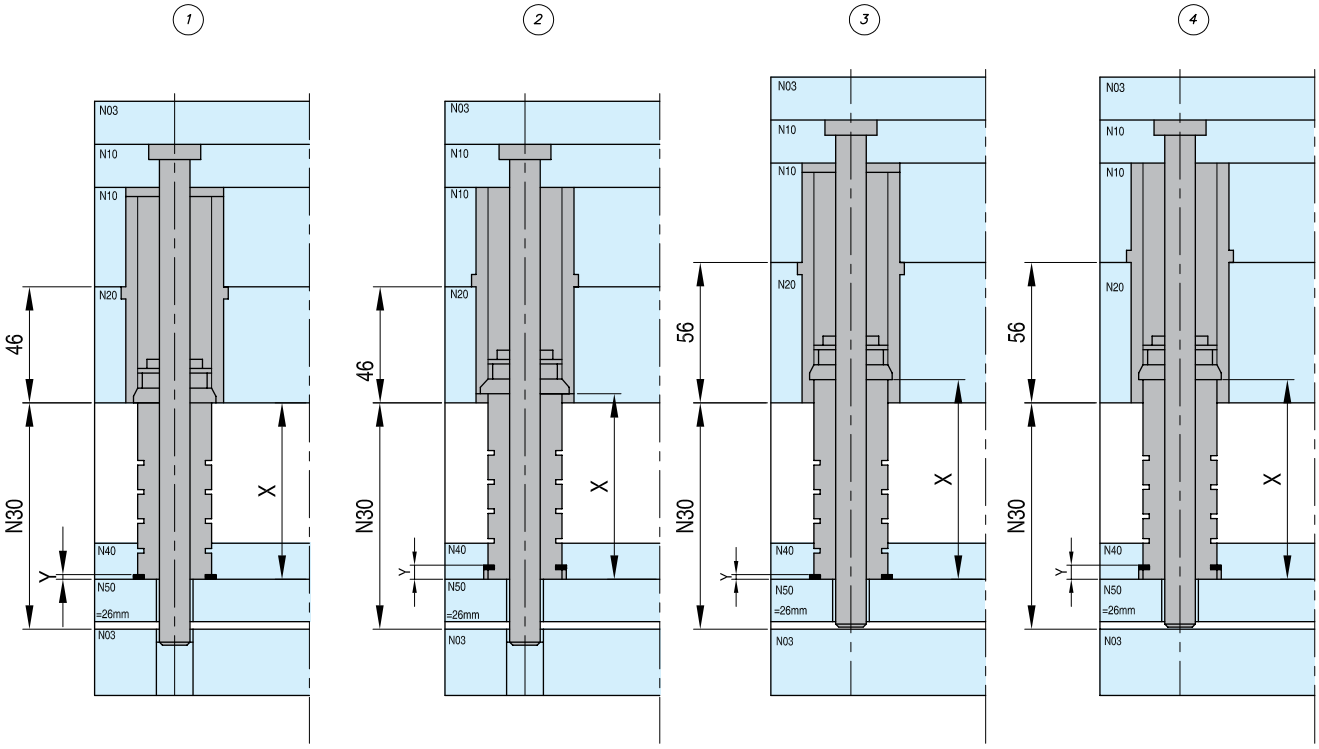

Ex.N30	X 1	Y 1	X 2	Y 2	X 3	Y 3	X 4	Y 4
66	36	2,5	40	6,5	46	2,5	50	6,5
86	56	2,5	60	6,5	66	2,5	70	6,5
106	76	2,5	80	6,5	86	2,5	90	6,5
126	96	2,5	100	6,5	106	2,5	110	6,5

1. Four units minimum per mold are preferred. Two units per mold mounted on the centerline of the mold are a must.
2. Use guided ejection in the ejector assembly.
3. Use only in a horizontal press.
4. If used in an unbalanced mold. Uneven loading could occur.
5. Lubricate occasionally with a lithium type grease.
6. Timing is critical: all units to be timed within ±0,013mm of one another.
7. No preload of unit.

Spare Parts			
Bushing	Post	Pin	Set: cam finger washer, upper and lower snap ring
ERB 100 E	**ERS 100 E**	**EPA 05**	**ER 100 RK E**
ERB 101 E	**ERS 101 E**	**EPA 05**	**ER 101 RK E**

ER

Early ejector return assembly

View A: Mold closed, molding position. Post and cam fingers must be coordinated, so that the pin can slip into post when ejector plates are in final position.

View B: Mold open, mold release position. During ejection the cam fingers have slipped into bushing and inner diameter is reduced.

View C: Mold closing. Pin is pressing the cam fingers and pushes ejector plates back.

View D: Mold continues closing. Ejector plate has been pushed all the way back. Cam fingers have slipped outward into counterbore in bushing allowing actuator pin to slip by. Mold continues closing until completely closed as in view A.

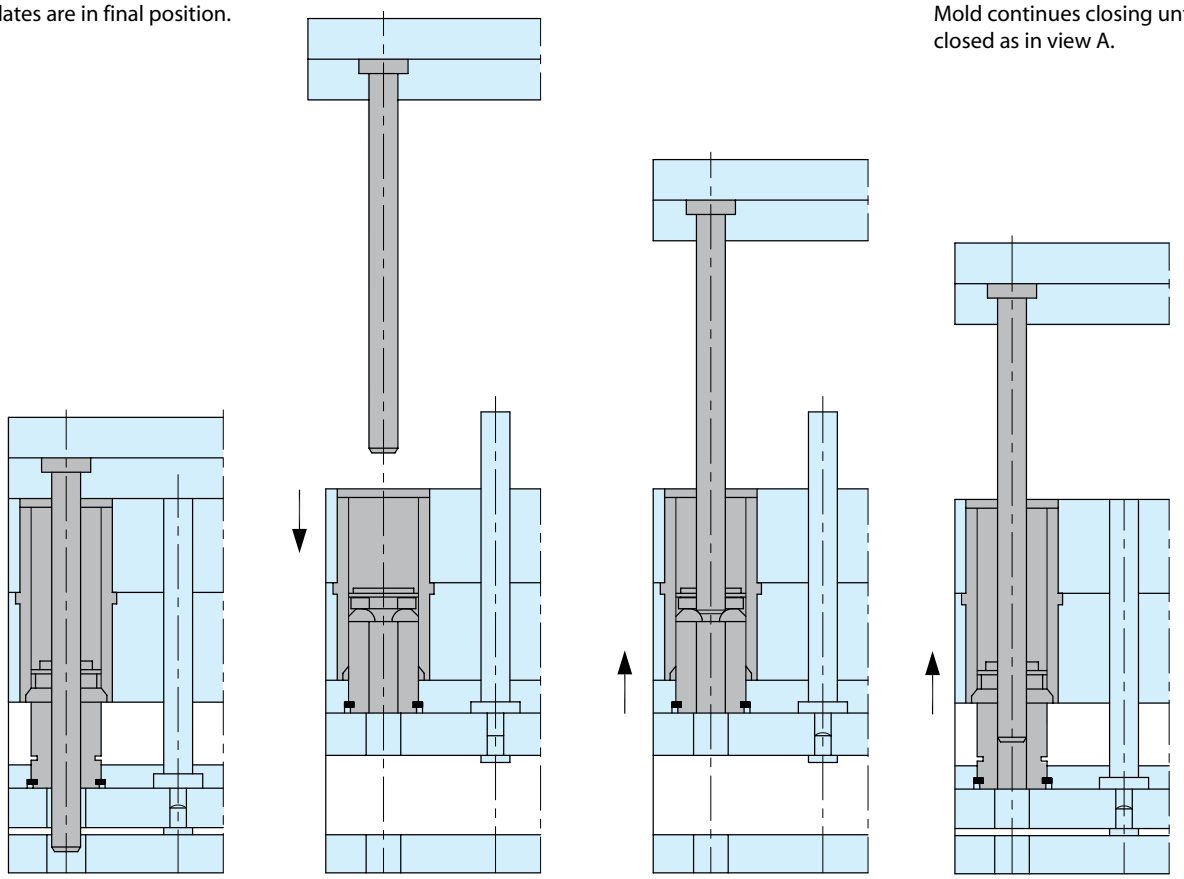

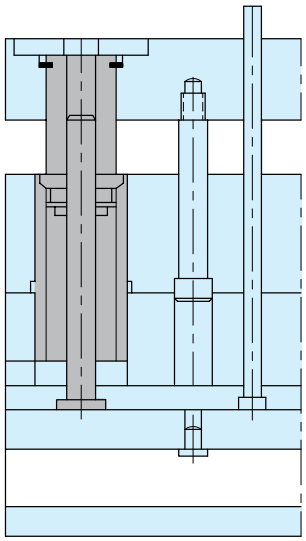

Installation for Ejector pin travel beyond stripper plate. Stripper plate moves forward until cam fingers slip outward into counterbore in bushing and ejector plate continues to travel.

Accelerated knock-outs

AKO

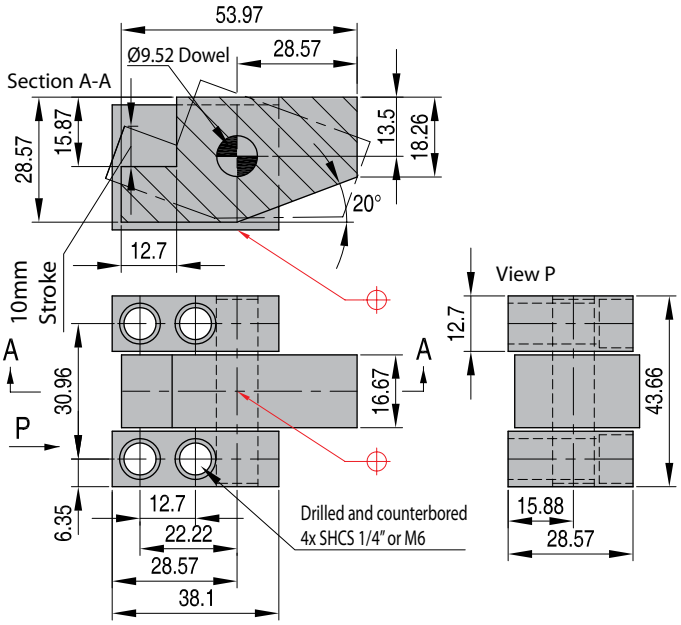

The accelerated knock-outs are simple in design, using a pivot-type motion for accelerated ejection. Mechanical advantage is 2:1. They will accommodate ejector pins up to 9,5mm in diameter. (Pins with head diameters over 15,8mm can be ground down to fit). Simplicity of design permits accelerated knock-outs to be either inserted into the ejector plate (as shown below) or top mounted, depending on space available for the ejection movement.

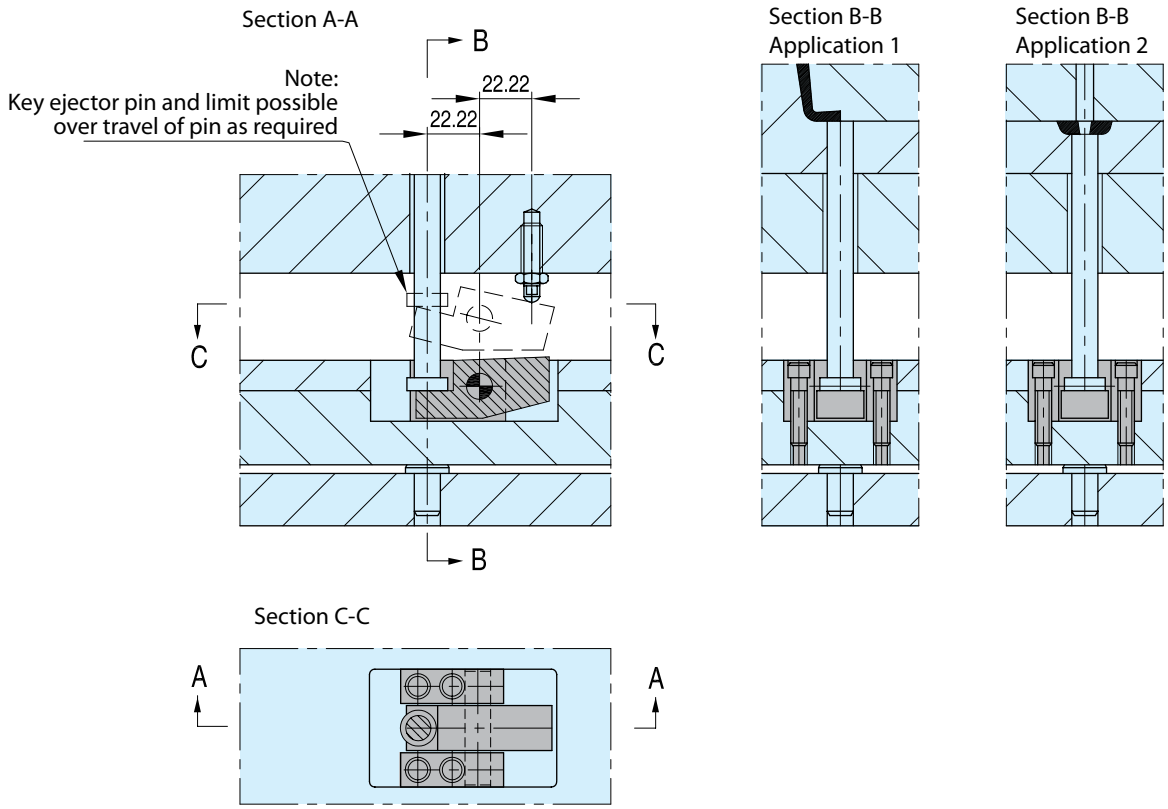

Info PSR-PSM-MRT-SRTM

DME Slide Retainers provide a compact and economical means of slide retention which obsoletes the cumbersome external spring or hydraulic methods. Interference with machine tie bars or safety gates is no longer a problem.

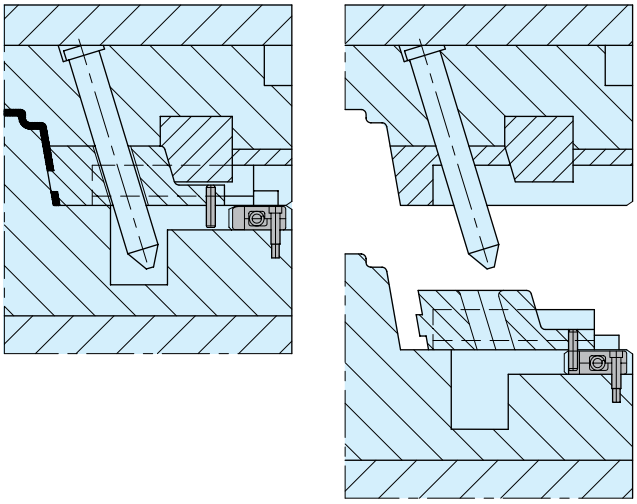

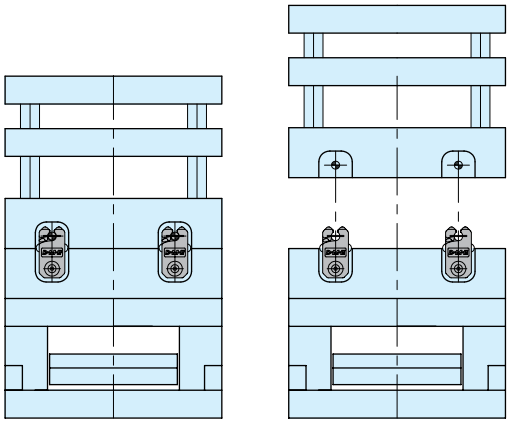

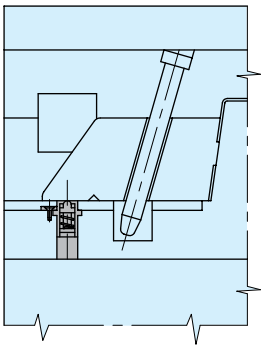

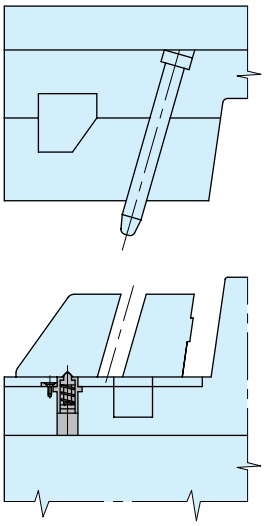

Available in three sizes with increasing weight holding capacities, the Slide Retainers can be used individually or in multiples for larger or heavier slides.

3 types to choose from:

1. **MRT**: the dowel pin installed in the slide positively locks into the retainer until disengaged by the mold's closing action. Designed with a generous lead-in at the socket opening so the dowel pin will enter the socket even if there is a slight misalignment between the retainer and the pin.

2. **PSM**: similar to MRT but spring is completely enclosed and protected from contamination.

3. **PSR**: works without dowel pin so slide can be removed without removing slide retainer. Small in size yet strong holding power.

Mini-Might™ Slide Retainers

PSR

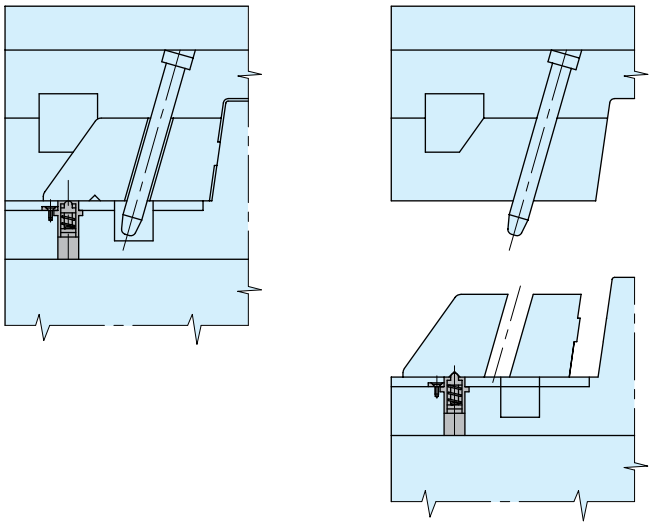

- Small in size yet strong holding power
- Product design facilitates easy installation
- Slide can be removed without the removal of the slide retainer
- Self-contained design
- Line contact engagement
- Three retaining rates: 44, 88 and 176 Newton
- Max. temperature 120°C

Installation instructions

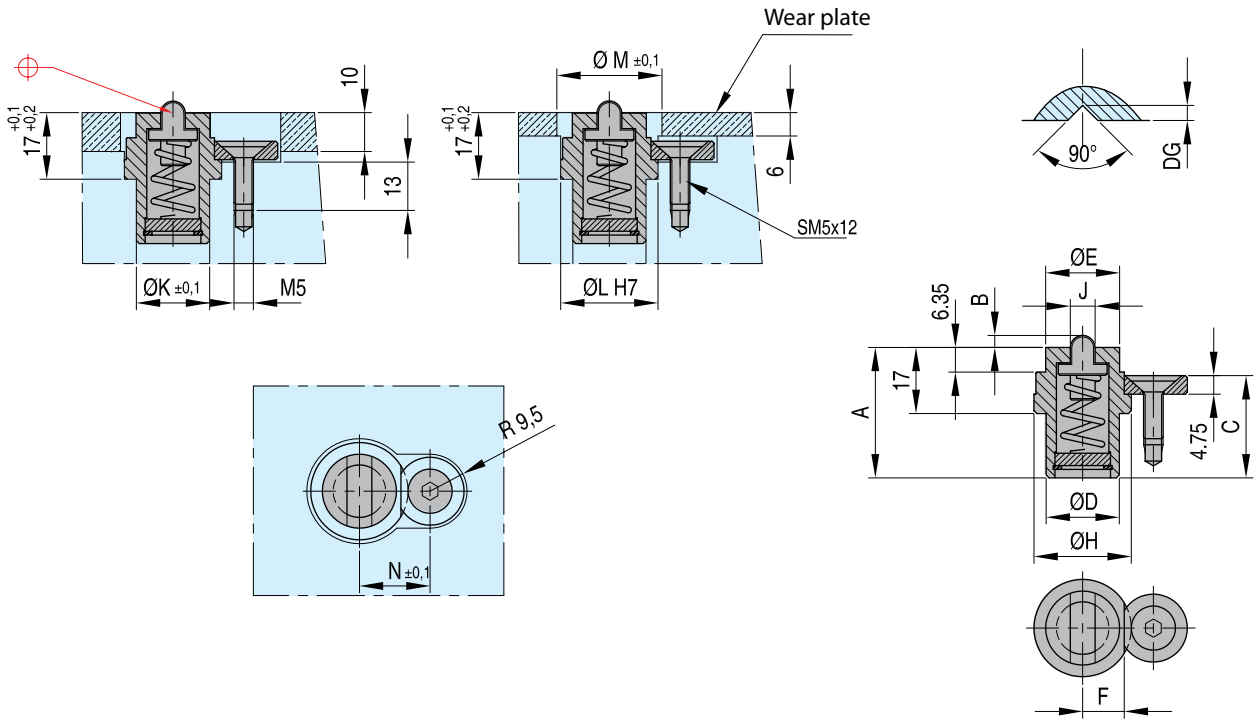

REF	Mini Might™ Slide retainer								Max. Slide weight Kg	DG mm	Pocket dimensions			
	A	B	C	D	E	F	H	J			K	L	M	N
PSR 1000	27,43	1,83	20,20	15,75	16	9,52	22	17,5	4,4	2,3	15,87	22	24	17,0
PSR 2000	33,53	3,07	26,30	18,8	19	10,67	25	21,5	8,8	3,9	19,05	25	27	18,2
PSR 4000	32,00	3,78	24,76	22,1	22	11,86	28	31,5	17,6	4,9	22,23	28	30	19,4

MRT

Slide retainers

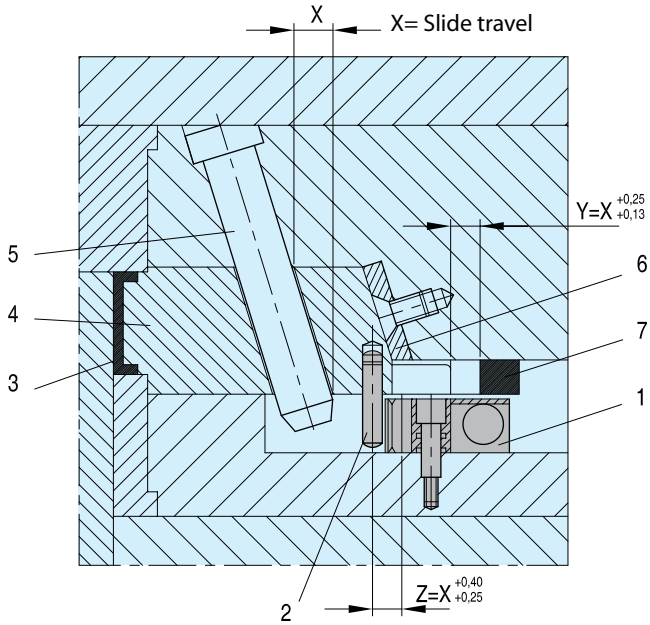

REF	Slide retainer							Retainer pockets in mold										Max. slide weight (kg)
	A	B	C	D	E	F*	S	G	H	I	J	K	L	M	N	P	R	
MRT-10M	38	19	16	22	16	9,1	5	19	26	25	17	8	6	M5	6	6	15,5	10
MRT-20M	54	32	20	33	21	12,7	6	24	36	38	21	10	8	M6	8	8,5	20,5	20
MRT-40M	86	45	30	53	33	20,3	10	36	56	51	31	12	11	M8	10	10	25,0	40

*The distance from the center of the dowel pin to the center of the stripper bolt is critical

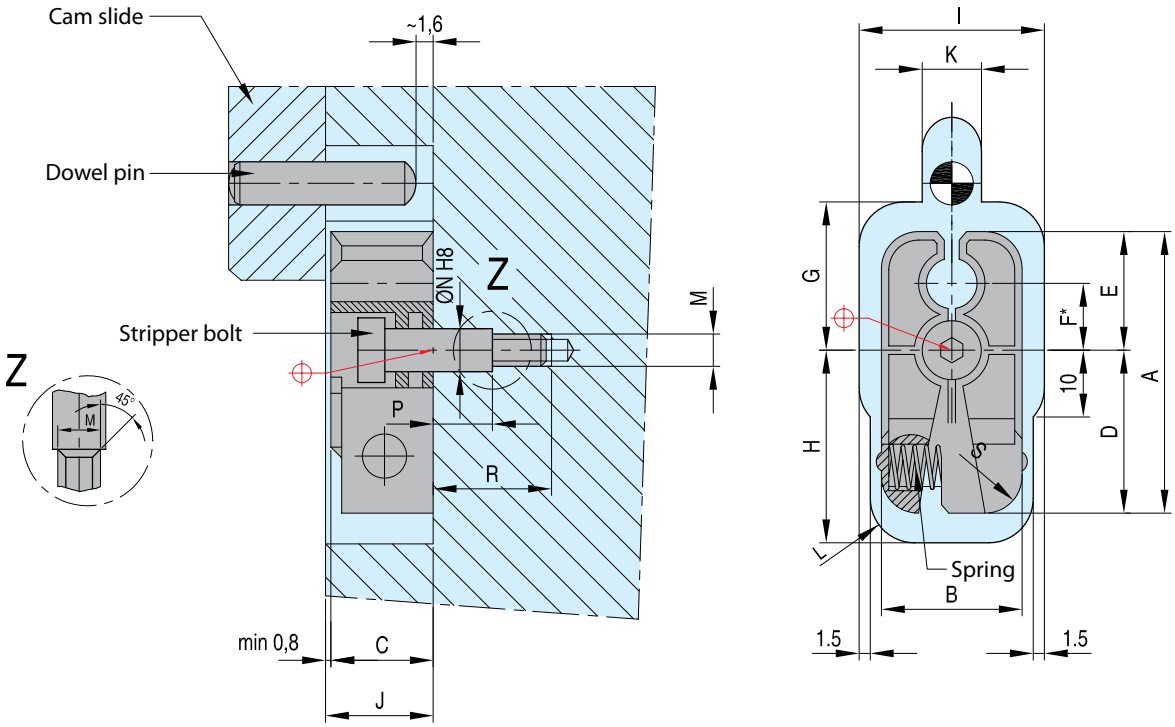

Replacement parts		
Dowel pin	REF	Tightening torque for stripper bolt Nm max.
DP 6-30	**PM 5x16**	10
DP 8-40	**PM 6x20**	15
DP 10-60	**PM 8x30**	20

Slide retainers

PSM

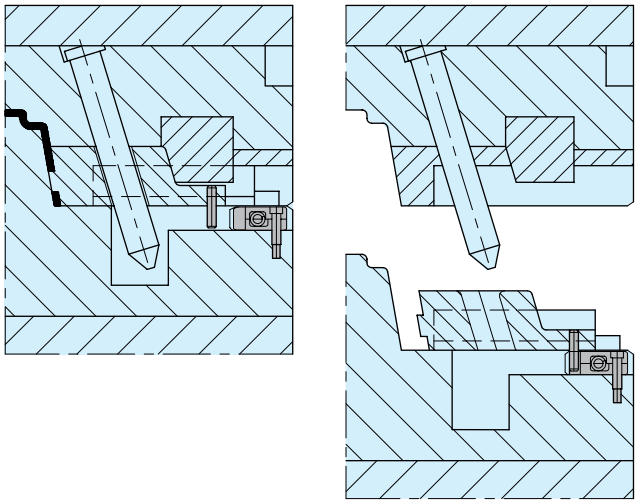

REF	Cam slide									Retainer pockets in mold									Max. slide weight (kg)
	A	B	C	D	E	F*	G	H	I	J	K	L	M	N	O	P	Q	R	
PSM 0001	38	19	16	7	31,5	24,89	24,0	15,5	25,5	17,5	8	10,0	34,5	8	8,5	6	20	M5	10
PSM 0002	54	32	20	11	43,0	34,93	36,5	22,5	38,0	21,5	10	14,5	46,0	10	10,5	8	25	M6	20
PSM 0003	86	45	30	19	67,0	53,98	49,5	40,0	51,0	31,5	12	22,5	70,0	12	17,0	10	35	M8	40

*The distance from the center of the dowel pin to the center of the stripper bolts is critical.

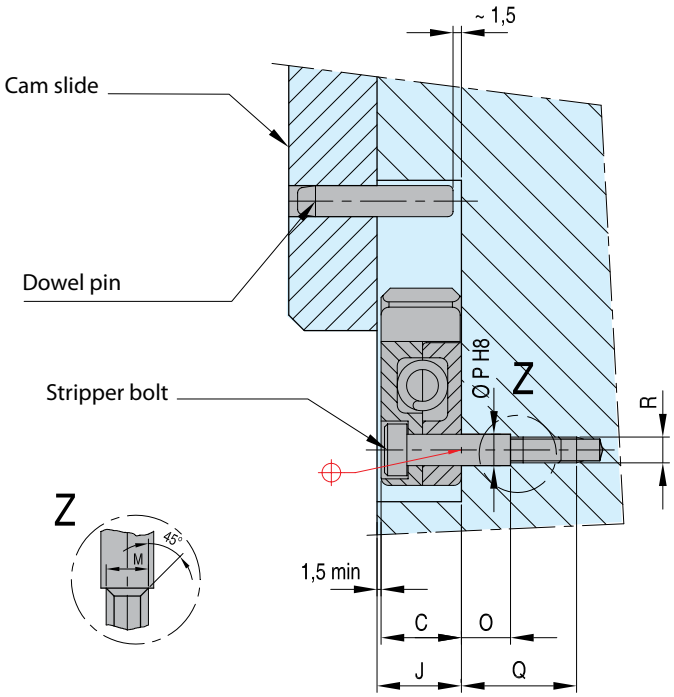

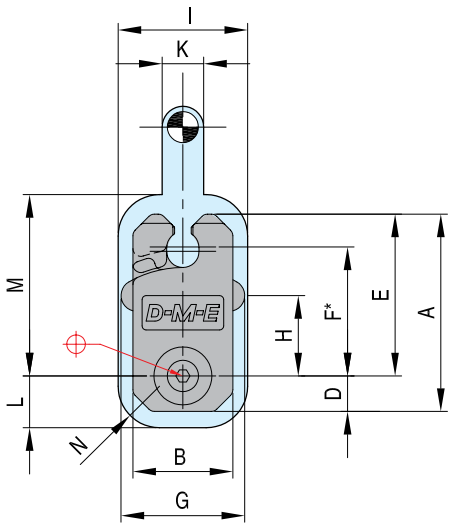

Replacement parts		
Dowel pin	REF	Tightening torque for stripper bolt Nm max.
DP 6-30	**PM 5x20**	10
DP 8-40	**PM 6x25**	15
DP 10-60	**PM 8x40**	20

SRTM

Slide retainers

Mat.: 4140 - 28-32 HRC, Black Oxide

DME's new SRTM Series Slide Retainers reliably hold side actions from 4 to 36 kg (10 to 80 pounds).

The new slide retention design features Friction Free™ technology for smooth operation, especially in clean room or greaseless environments.

The compact design allows for installation in the mold base or
wear plates.

REF Retainer	D +0,1 -0,0	L ±0,25	S ±0,5	T Screws (2)	E Max. thread depth	Max slide Weight (kg)	REF Cleat	G ±0,25	C ±0,5	H Screws (2)	J Min. thread depth
SRTM-04 D	15,9	4,06	3,95	M3	1,9	4,5	**SRTMC-04**	6,35	4,85	M3	6,35
SRTM-13 D	19,1	12,70	3,80	M4	4,8	13,5	**SRTMC-13**	6,35	6,35	M3	6,35
SRTM-36 D	22,3	19,05	3,80	M4	6,2	36,0	**SRTMC-36**	6,35	7,60	M3	6,35

The installation shown at the right is typical for all retainers and cleats. However, if not utilizing the optional cleat, a V-groove or ball cut can be machined as shown in the graphics at right. In both installations, the edge of the slide that would first contact the retainer should have a chamfer (shown) or a radius.

On the slot width, the cutter clearance must exceed the "D" dimension.

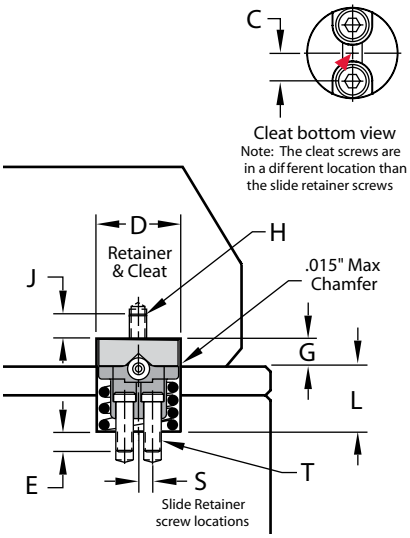

REF Retainer	V groove	Ball Cut	
	K mm	R mm	M mm
SRTM-04 D	1	2	0,23
SRTM-13 D	2	3	0,75
SRTM-36 D	2	3	0,75

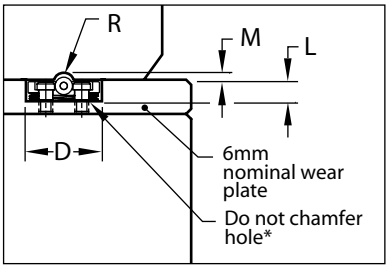

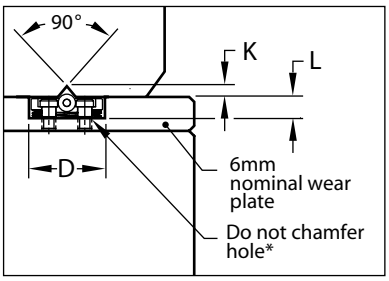

* chamfers machined will not allow the stripper bolt in the assembly to seat properly.

Technical Information:

Maximum operating temperature is 218° C.
The roller is through hardened stainless steel and the axle is nitrided stainless steel.
For P-20 slides, a Cleat is suggested versus adding a detent in the slide.
Retainers and Cleats are sold separately and include all required screws.
Replacement items are available. Refer to price list for catalog numbers and pricing, and contact Customer Service for availability.

Friction pullers

FP

DME Friction Pullers for optimal parting line control. Controls plate movement by using friction at a specified setting to release the mold plate when the travel limit is achieved.
Available in four sizes (10mm, 13mm, 16mm and 20mm), Friction Pullers may be used to consistently draw floating plates and inserts.

Advantages and Benefits
Reference arrows enable easy adjustment
Self-locating even if plates shift due to thermal expansion or machining variances
Internal self-venting eliminates the need for additional machining
Fastener includes Nylok®
patch for secure installation

Patents Pending

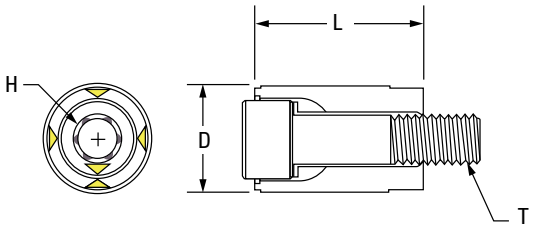

Recommended interference fit for Friction Pullers is .1 to .15mm larger than the receiving hole. To adjust, rotate the screw clockwise and measure bulge to achieve proper fit. Adjust further if necessary with ¼ turn increments, lining up the reference arrows on the fastener to the resin.

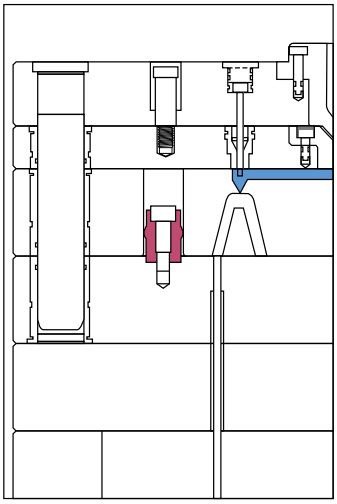

Mold Closed

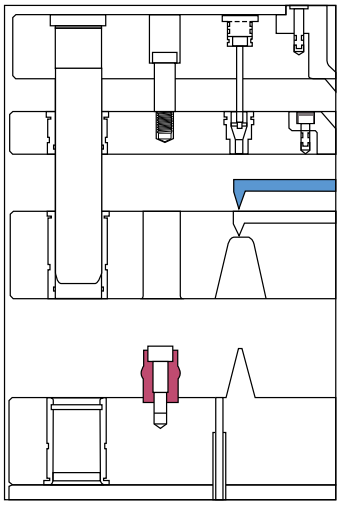

Mold Open

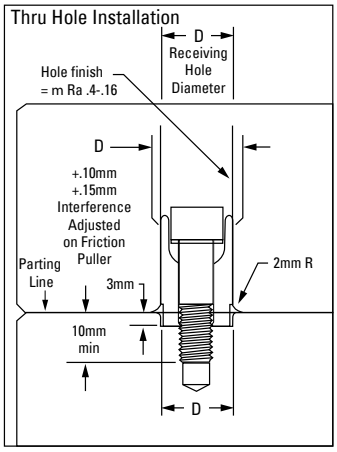

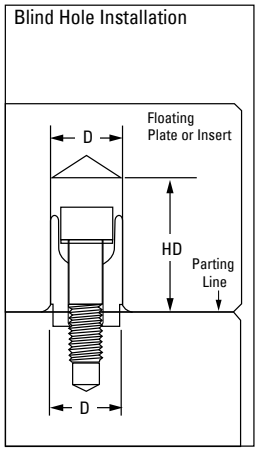

REF	D	L	T	H Hex	Hole depth	Max. Force (each) kg
FP10D	10	17	M5-0,80	3	20	32,5
FP13D	13	20	M6-1,00	4	23	62,5
FP16D	16	25	M8-1,25	5	30	150,0
FP20D	20	28	M10-1,50	6	32	212,5

Technical Data:
Material - Nylon 6 Resin with 8620 fastener
Maximum operating temperature - 248°F (120°C)
Before removing mold from the press for maintenance, rotate Friction Puller screw counter-clockwise with a ¾ turn to enable easy plate separation

Info VF-ULB/ULC/ULG-AW275/282

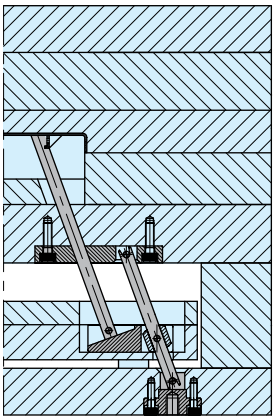

DME has a wealth of solutions for undercut applications:
3 options for straight-line “snap” or “hook” features:

Vectorform VF: unprecedented design flexibility allowing designers to incorporate undercuts that are twice as deep as previously possible. Alternatively, mold designers can cut their ejector stroke in half while maintaining existing undercut geometries

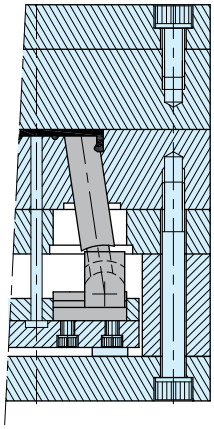

Unilifter ULB-ULC-ULG: back by popular demand, this sliding system can release undercut angles up to 10°

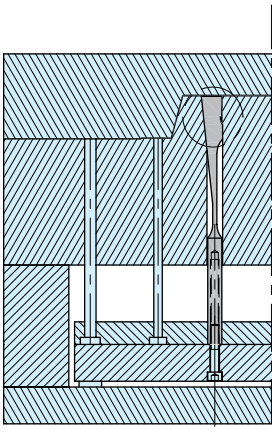

Flexible ejectors AW275/AW280: an inexpensive component used for small, simple undercuts.

Info: CC - Multiform

2 options for internal undercuts (collapsible cores):

Collapsible Core CC: the global standard for a collapsible core, CC's have been successfully used for over 30 years to mold simple parts like caps as well as more complicated technical fittings. Once installed, CC's offer trouble free operation for millions of cycles.

Multiform: when nothing else will work, Multiform offers unrivalled undercut possibilities and sophisticated 3D part geometries. Precision machined to extremely high tolerances to give the highest quality plastic parts.

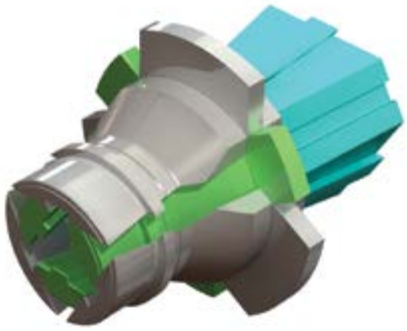

Info - EXP - CC

External undercuts using the Expandable cavity/core.
Uses the same high-quality technology from **DME** CC collapsible cores. Custom designed for each application to suit space and build-in requirements.

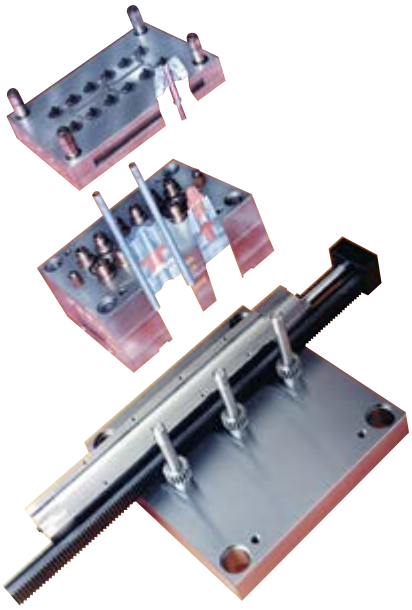

Unscrewing device ZG for threaded parts. Used worldwide for over 30 years this simple yet unique system employs a hydraulic cylinder to actuate a gear-rack.

- Thickness of Hydraulic cylinders chosen to match standard plate thicknesses
- Square cross section and 4 precision ground surfaces means the cylinder can be conveniently incorporated inside the mold, for example as risers
- Possibility to use rack or cam on all 4 sides of cylinder
- End caps can be rotated allowing flexibility for oil feed
- Cam ramp ZL allows actuation of stripper plate after unscrewing without a second ejector stroke
- Rod seal includes “casing wiper” to prevent dirt entering inside of cylinder
- Optional limit switch with high accuracy micro switches, easily accessible for fine adjustment

Vectorform - Lifter System

VF-SS - VF-JS - VF-US

VectorForm Lifter Sets include:
Holder bushing - VF-HB
Guide Rod - VF-GR
Guide Plate - VF-GP
Slide Base:
Standard - VF-SB,
or Joint - VF-JB,
or Universal - VF-UB

REF	Includes	Includes	Includes	Includes	Set
VF 06-SS	VF 06-HB	VF 06-GR	VF 06-GP	VF 06-SB	Standard
VF 08-SS	VF 08-HB	VF 08-GR	VF 08-GP	VF 08-SB	Standard
VF 10-SS	VF 10-HB	VF 10-GR	VF 10-GP	VF 10-SB	Standard
VF 13-SS	VF 13-HB	VF 13-GR	VF 13-GP	VF 13-SB	Standard
VF 16-SS	VF 16-HB	VF 16-GR	VF 16-GP	VF 16-SB	Standard
VF 20-SS	VF 20-HB	VF 20-GR	VF 20-GP	VF 20-SB	Standard
VF 06-JS	VF 06-HB	VF 06-GR	VF 06-GP	VF 06-SB	Joint
VF 08-JS	VF 08-HB	VF 08-GR	VF 08-GP	VF 08-SB	Joint
VF 10-JS	VF 10-HB	VF 10-GR	VF 10-GP	VF 10-SB	Joint
VF 13-JS	VF 13-HB	VF 13-GR	VF 13-GP	VF 13-SB	Joint

REF	Includes	Includes	Includes	Includes	Set
VF 16-JS	VF 16-HB	VF 16-GR	VF 16-GP	VF 16-SB	Joint
VF 20-JS	VF 20-HB	VF 20-GR	VF 20-GP	VF 20-SB	Joint
VF 06-US	VF 06-HB	VF 06-GR	VF 06-GP	VF 06-SB	Universal
VF 08-US	VF 08-HB	VF 08-GR	VF 08-GP	VF 08-SB	Universal
VF 10-US	VF 10-HB	VF 10-GR	VF 10-GP	VF 10-SB	Universal
VF 13-US	VF 13-HB	VF 13-GR	VF 13-GP	VF 13-SB	Universal
VF 16-US	VF 16-HB	VF 16-GR	VF 16-GP	VF 16-SB	Universal
VF 20-US	VF 20-HB	VF 20-GR	VF 20-GP	VF 20-SB	Universal

Features & Benefits

1. Moves freely at angles up to 30°. For angles greater than 30° please contact **DME** Technical Service for design guidance.
2. Plate machining is significantly simplified as no diagonal hole machining is required in order to install the VectorForm Lifter System.
3. Maximum lifter angle is greatly improved with VectorForm Lifter System. Lifter cores may be installed at any given angle up to 30°.
4. The robust design and construction of the VectorForm Lifter System ensures that it is secure at any given ejector stroke regardless of angle used.
5. The compact design of the VectorForm Lifter System minimizes potential for interference with other components within the mold.
6. VectorForm Lifter System components are engineered for the common injection molding environment. No special coatings are necessary.
7. The lifter core assembly may be secured to the Slide Base in a variety of ways, maximizing design flexibility.
8. Maximizes allowable undercut space.

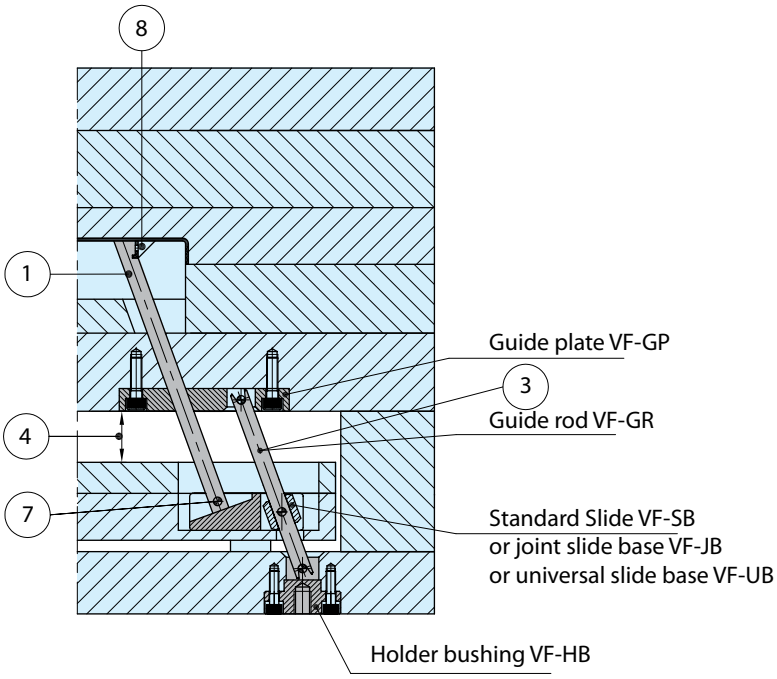

VF-SB

Standard Slide SB

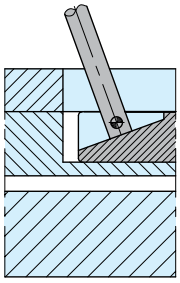

The Standard Slide Base is the most flexible and the most economical slide base. The Standard Slide Base can be custom machined by the mold builder to meet specialized application requirements. The Standard Slide Base is also the most robust slide base with respect to loads and forces.

VF-JB

Joint Slide Base JB

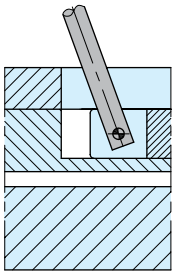

Joint Slide Base permits the lifter core assembly to be retained with a single pin.

VF-UB

Universal Slide Base UB

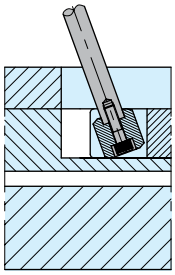

The universal Slide Base is similar to the Joint Slide Base, although the single pin is replaced by a universal joint which offers greater flexibility than the Joint Slide Base while still requiring only one screw to retain the lifter core assembly.

VectorForm Lifter Systems

VF-SS - VF-JS - VF-US

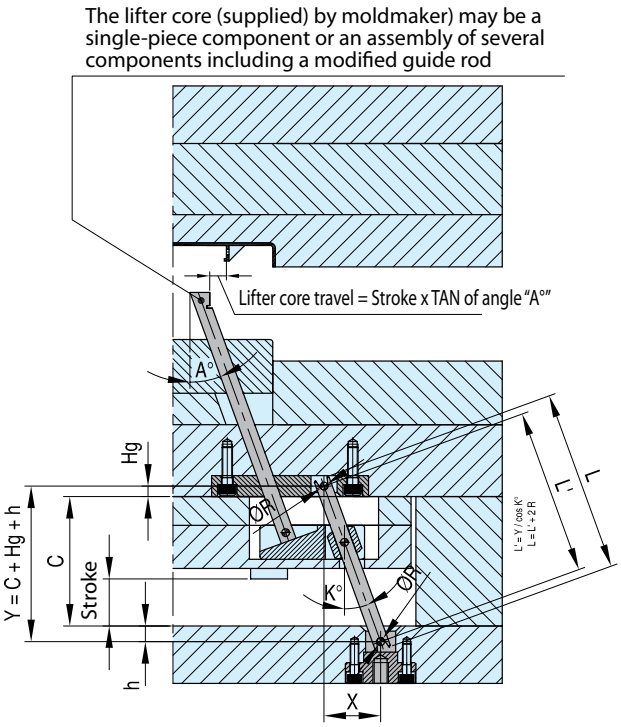

C - Ejector box height
I - Ejector retainer plate height
J - Bottom clamp height

Locking Angles

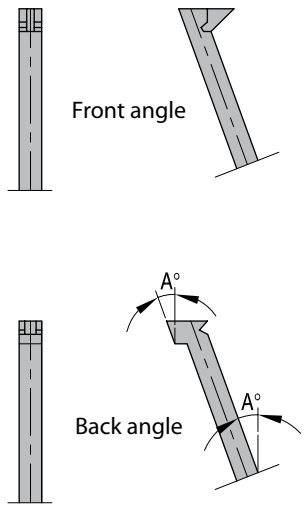

Installation instructions

1. General Installation
It is recommended that the VectorForm Lifter System be installed as shown. For each given VectorForm set, all components MUST be of the same size. However, separate sets of different sizes may be installed in the same mold. Actuation of VectorForm Lifter Systems can be accelerated or decelerated by an inclined sliding surface on the ejector plate and ejector retainer plate.
2. Angles
The VectorForm Lifter System may be used with angles ranging from 5° (min) to 30° (max). Deep undercuts in the molded part can be obtained by using a larger angle in the lifter core and by increasing the ejector plate stroke.
3. Lifter Core Guidance
The lifter core must have sufficient guidance in the tool. For multiple lifter cores installed in tandem in the tool, additional guidance in the core inserts is recommended. If resistance in actuation is great, an additional Guide Plate may be placed directly below the core insert.
4. Guided Ejection
Guided ejection is recommended for all designs.
5. Fit and Finish
Standard component dimensions and Rockwell hardness are provided in the component specifications section. Should the standard components need to be modified, additional performance can be obtained by treating after finish machining (TiN coating, flash-chrome, etc.). Component installations can be fitted to suit. Ensure a loose fit on the Holder Bushing and Guide Plate installation. Ensure a precise fit between the lifter core and Guide Plate. The Holder Bushing will automatically align prior to bolting the bushing to the clamp plate. Lubrication is not generally required nor recommended. If lubrication is used, it should be low-viscosity.
6. Locking Angles/ Component Back-up
Locking angles may be designed to provide a locking surface to counter against molding pressure. A block construction using a square lifter core can also allow the resin pressure to be backed up by the core insert. If the axial load acting on the lifter core exceeds the limit allowed for the slide base pin (used in VF-JB and VF-UB Slide Bases), use a Standard (VF-SB) Slide Base and back the lifter core on the slide by machining a ledge that is perpendicular to the axis of the lifter core. The lifter core must then seat firmly against the angled face of the Slide Base.
7. Non-Standard Shapes/Materials
Lifter core blocks may be machined to any desired shape and size, provided the chosen number and size of the VectorForm Lifter System core standard components will support the lifter core blocks. Lifter core blocks are to be supplied by the moldmaker.

VF-SB

Standard Slide Base Mat.: DIN 1.7225/30-33 HRC

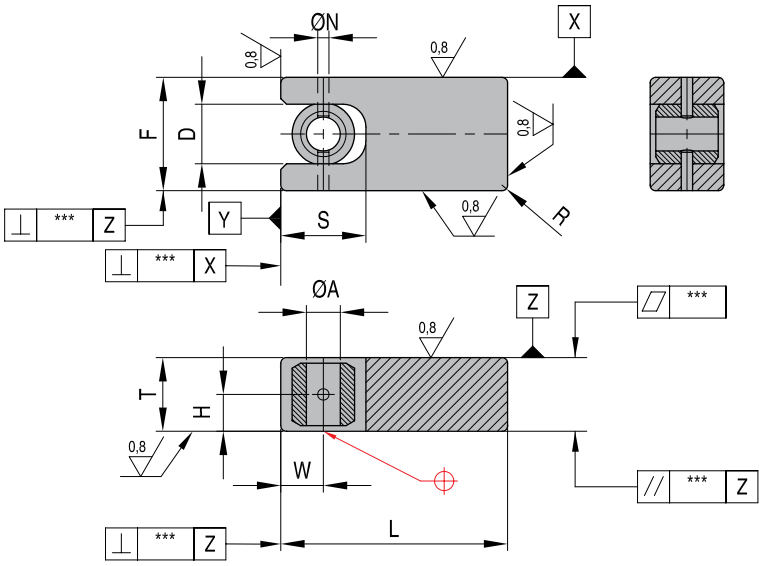

Additional Machining:
Retaining bolt installation on lifter core rod or assembly.
Heat Treatment:
Gas nitriding is permissible after additional machining has been performed.

REF	A	L	F	T	D	H	W	S	N	R	▱	/ /	⊥
VF 06 SB	6	40 $^{0}_{-0,10}$	20 $^{0}_{-0,02}$	13 $^{0}_{-0,02}$	10,5	6,5	7,5	15	2	1	0,010	0,01-0,02	0,02
VF 08 SB	8	50 $^{0}_{-0,10}$	25 $^{0}_{-0,02}$	15 $^{0}_{-0,02}$	13,5	7,5	10,0	20	3	1	0,010	0,01-0,02	0,02
VF 10 SB	10	60 $^{0}_{-0,20}$	32 $^{0}_{-0,03}$	20 $^{0}_{-0,03}$	17,0	10,0	12,5	25	4	2	0,015	0,02-0,03	0,03
VF 13 SB	13	80 $^{0}_{-0,20}$	40 $^{0}_{-0,03}$	25 $^{0}_{-0,03}$	22,0	12,5	15,0	30	5	2	0,015	0,02-0,03	0,03
VF 16 SB	16	100 $^{0}_{-0,30}$	50 $^{0}_{-0,05}$	30 $^{0}_{-0,05}$	27,0	15,0	20,0	40	6	3	0,020	0,02-0,05	0,05
VF 20 SB	20	130 $^{0}_{-0,30}$	60 $^{0}_{-0,05}$	40 $^{0}_{-0,05}$	33,0	20,0	25,0	50	7	3	0,020	0,02-0,05	0,05

VF-JB

Joint Slide Base Mat.: DIN 1.7225/DIN 1.1213/60-66HRC

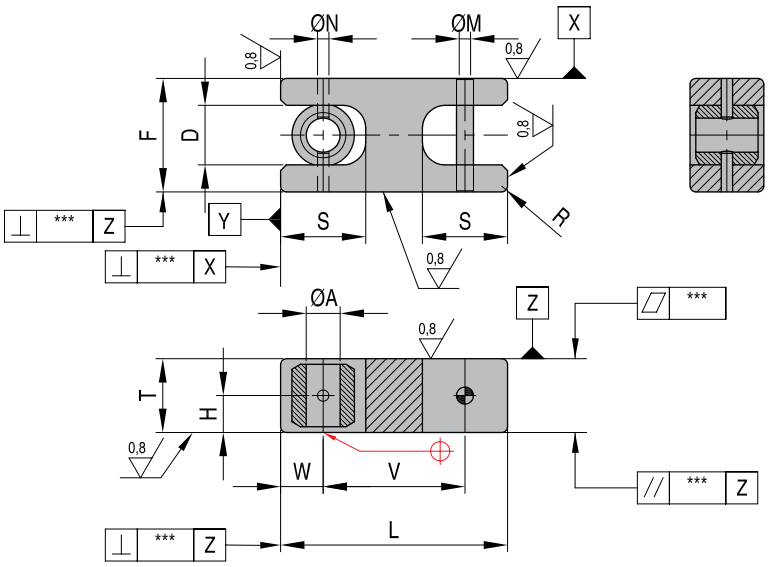

Attachment: Joint Pin
Heat Treatment: Gas nitriding is permissible; during nitriding, use a pin finer (-0.01) than the attached joint pin.
Joint Pin material:
DIN1.1213
Hardness: HRC 60-66
Tempering temperature: 600°C

REF	A	L	F	T	D	H	W	S	V	N	M	R	▱	/ /	⊥
VF 06 JB	6	40 $^{0}_{-0,10}$	20 $^{0}_{-0,02}$	13 $^{0}_{-0,02}$	10,5	6,5	7,5	15	25	2	3	1	0,01	0,01-0,02	0,02
VF 08 JB	8	50 $^{0}_{-0,10}$	25 $^{0}_{-0,02}$	15 $^{0}_{-0,02}$	13,5	7,5	10	20	30	3	4	1	0,01	0,01-0,02	0,02
VF 10 JB	10	60 $^{0}_{-0,20}$	32 $^{0}_{-0,03}$	20 $^{0}_{-0,03}$	17	10	12,5	25	35	4	5	2	0,015	0,02-0,03	0,03
VF 13 JB	13	800 $^{0}_{-0,20}$	40 $^{0}_{-0,03}$	25 $^{0}_{-0,03}$	22	12,5	15	30	50	5	6	2	0,015	0,02-0,03	0,03
VF 16 JB	16	100 $^{0}_{-0,30}$	50 $^{0}_{-0,05}$	30 $^{0}_{-0,05}$	27	15	20	40	60	6	8	3	0,02	0,02-0,05	0,05
VF 20 JB	20	130 $^{0}_{-0,30}$	60 $^{0}_{-0,05}$	40 $^{0}_{-0,05}$	33	20	25	50	80	7	10	3	0,02	0,02-0,05	0,05

Universal Slide Base

Mat.: DIN 1.7225/30-33 HRC

VF-UB

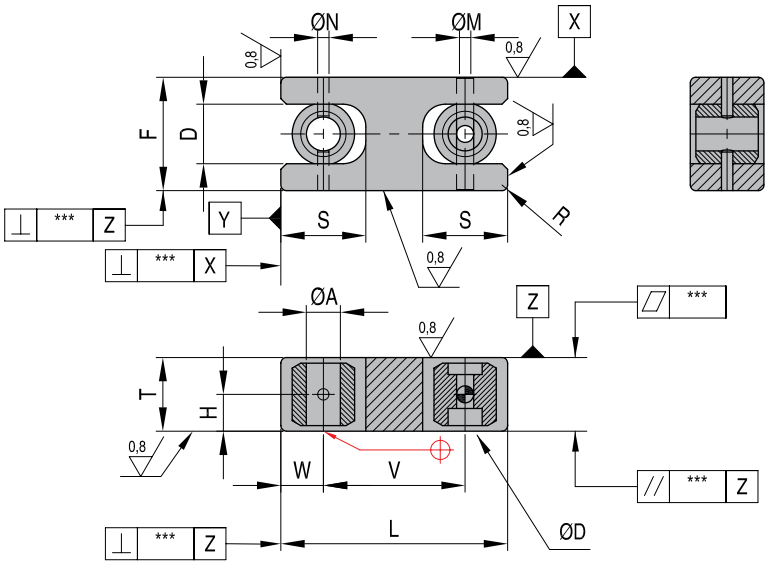

Attachment: None
Heat Treatment:
Nitriding is permissible.

REF	A	L	F	T	D	H	W	S	V	N	M	ØD	R	▱	//	⊥
VF 06 UB	6	40 $^{0}_{-0,10}$	20 $^{0}_{-0,02}$	13 $^{0}_{-0,02}$	10,5	6,5	7,5	15	25	2	3	M3x10	1	0,010	0,01-0,02	0,02
VF 08 UB	8	50 $^{0}_{-0,10}$	25 $^{0}_{-0,02}$	15 $^{0}_{-0,02}$	13,5	7,5	10,0	20	30	3	4	M4x12	1	0,010	0,01-0,02	0,02
VF 10 UB	10	60 $^{0}_{-0,20}$	32 $^{0}_{-0,03}$	20 $^{0}_{-0,03}$	17,0	10,0	12,5	25	35	4	5	M5x15	2	0,015	0,02-0,03	0,03
VF 13 UB	13	80 $^{0}_{-0,20}$	40 $^{0}_{-0,03}$	25 $^{0}_{-0,03}$	22,0	12,5	15,0	30	50	5	6	M6x20	2	0,015	0,02-0,03	0,03
VF 16 UB	16	100 $^{0}_{-0,30}$	50 $^{0}_{-0,05}$	30 $^{0}_{-0,05}$	27,0	15,0	20,0	40	60	6	8	M8x25	3	0,020	0,02-0,05	0,05
VF 20 UB	20	130 $^{0}_{-0,30}$	60 $^{0}_{-0,05}$	40 $^{0}_{-0,05}$	33,0	20,0	25,0	50	80	7	10	M10x35	3	0,020	0,02-0,05	0,05

Additional machining - Installation classification

VF-SB VF-JB VF-UB

*These are retention grooves used to retain the slide base in the ejector plates. They need to be machined by the customer.

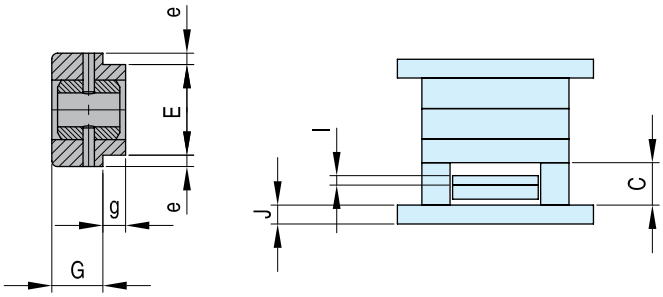

REF	E	e	G	g	I	J	C
VF 06 SB/JB/UB	16	2,0	9	4	13	20	50-120
VF 06 SB/JB/UB	20	2,5	11	4	15	25	50-150
VF 06 SB/JB/UB	26	3,0	14	6	20	30	70-200
VF 06 SB/JB/UB	33	3,5	17	8	25	35	100-250
VF 06 SB/JB/UB	42	4,0	22	8	30	40	120-300
VF 06 SB/JB/UB	50	5,0	28	12	35	50	120-400

VF-GR

Guide rod — Mat.: DIN 1.3505 - 58-60HRC

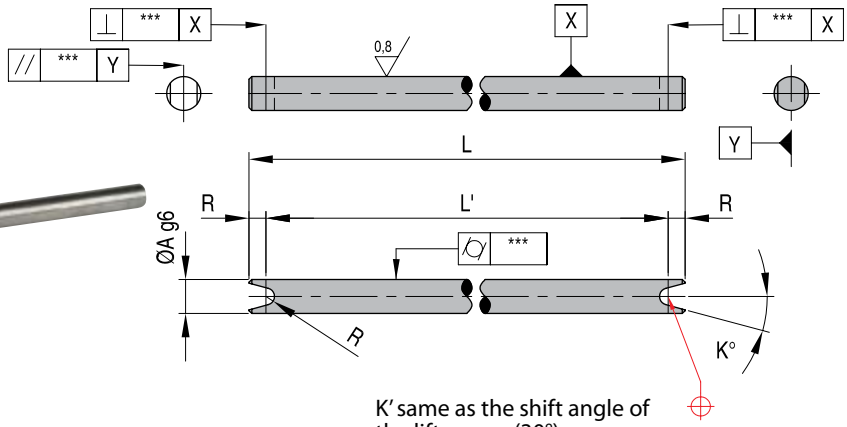

Note: Moldmaker to add grooves and chamfers per specification shown.

REF	A	L	L' = L-2R	R	▱ // ⊥
VF 06 GR	6	150	148 $^{-0,05}_{-0,1}$	1,0 $^{+0,02}_{0}$	0,02
VF 08 GR	8	190	187 $^{-0,05}_{-0,1}$	1,5 $^{+0,02}_{0}$	0,02
VF 10 GR	10	250	246 $^{-0,1}_{-0,2}$	2,0 $^{+0,03}_{0}$	0,03
VF 13 GR	13	310	305 $^{-0,1}_{-0,2}$	2,5 $^{+0,03}_{0}$	0,03
VF 16 GR	16	370	364 $^{-0,2}_{-0,4}$	3,0 $^{+0,05}_{0}$	0,05
VF 20 GR	20	500	493 $^{-0,2}_{-0,4}$	3,5 $^{+0,05}_{0}$	0,05

VF-GP

Guide plate — Mat.: 1.1213 - 22-25HRC

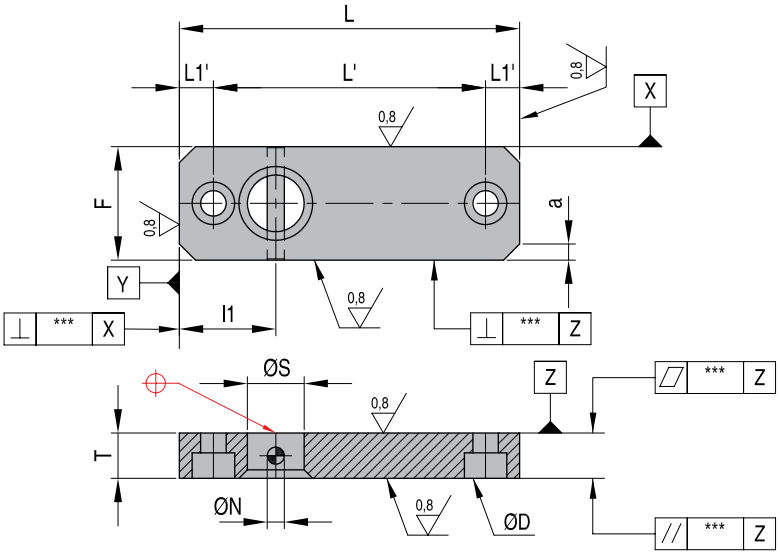

REF	L	F	T	S	N	L'	L1'	l1	ØD	//	⊥	⌭	a
VF 06 GP	60 $^{0}_{-0,04}$	20 $^{0}_{-0,02}$	8 $^{0}_{-0,02}$	10	2	50	5	17,5	M3x10	0,01	0,01-0,02	0,01-0,02	4,0
VF 08 GP	70 $^{0}_{-0,04}$	25 $^{0}_{-0,02}$	10 $^{0}_{-0,02}$	13	3	60	5	20	M4x12	0,01			5,0
VF 10 GP	90 $^{0}_{-0,06}$	32 $^{0}_{-0,03}$	12 $^{0}_{-0,03}$	16	4	75	7,5	25	M5x15	0,01	0,02-0,03	0,02-0,03	6,0
VF 13 GP	120 $^{0}_{-0,06}$	40 $^{0}_{-0,03}$	15 $^{0}_{-0,03}$	20	5	105	7,5	30	M6x12	0,01			7,5
VF 16 GP	150 $^{0}_{-0,1}$	50 $^{0}_{-0,05}$	20 $^{0}_{-0,05}$	25	6	130	10	40	M8x25	0,01	0,02-0,05	0,02-0,05	10,0
VF 20 GP	180 $^{0}_{-0,1}$	60 $^{0}_{-0,05}$	25 $^{0}_{-0,05}$	30	7	155	12,5	45	M10x30	0,01			12,2

Holder bushing

Mat.: 1.1213 - 15-20HRC

VF-HB

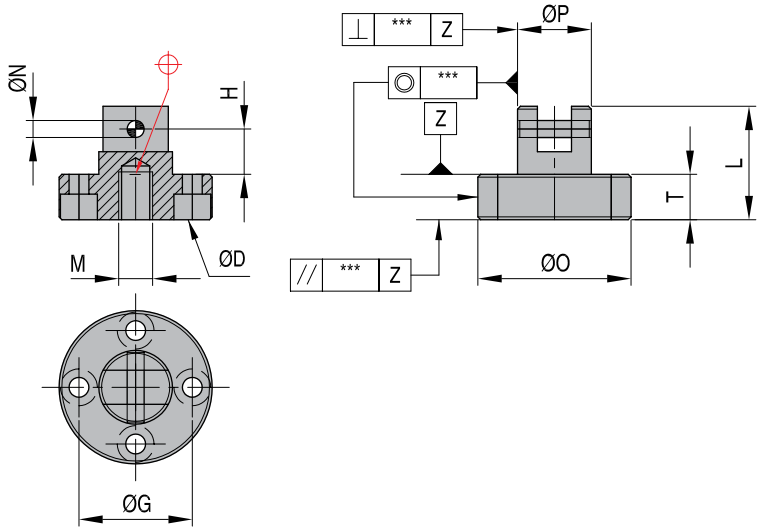

REF	P	L	O	T	G	OD	H	M	N	//	⊥	○
VF 06 HB	$13^{0}_{-0,05}$	$20^{-0,1}_{-0,2}$	$27^{0}_{-0,2}$	$8^{-0,1}_{-0,2}$	19	M3x10	8,0	M3x6	2	0,05	0,04	0,02
VF 08 HB	$16^{0}_{-0,05}$	$25^{-0,1}_{-0,2}$	$34^{0}_{-0,2}$	$10^{-0,1}_{-0,2}$	24	M4x12	10,0	M4x8	3	0,05	0,04	0,02
VF 10 HB	$20^{0}_{-0,07}$	$30^{-0,1}_{-0,3}$	$42^{0}_{-0,3}$	$12^{-0,1}_{-0,3}$	30	M5x15	12,0	M5x10	4	0,07	0,06	0,03
VF 13 HB	$25^{0}_{-0,07}$	$35^{-0,1}_{-0,3}$	$51^{0}_{-0,3}$	$15^{-0,1}_{-0,3}$	37	M6x12	12,5	M6x12	5	0,07	0,06	0,03
VF 16 HB	$30^{0}_{-0,1}$	$40^{-0,1}_{-0,5}$	$65^{0}_{-0,5}$	$20^{-0,1}_{-0,5}$	47	M8x25	12,0	M8x15	6	0,10	0,10	0,05
VF 20 HB	$40^{0}_{-0,1}$	$50^{-0,1}_{-0,5}$	$80^{0}_{-0,5}$	$25^{-0,1}_{-0,5}$	58	M10x30	15,5	M10x20	7	0,10	0,10	0,05

ULB-ULC-ULG

Unilifter

Unilifter - Undercut releasing system

- Standard components simplify mold design and construction for release of molded undercuts.
- Radiused dovetail design lets core blade seat automatically at the required angle.
- Smooth travel of U-Coupling in T-Gib eliminates heel binding often encountered in other fixed angle designs.
- Wide size selection covers more applications than similar standardized systems.
- **DME** steel 5 (1.2344) Core blades for easy conventional machining.
- Each Unilifter assembly is comprised of a Core blade, U-Coupling and T-Gib.

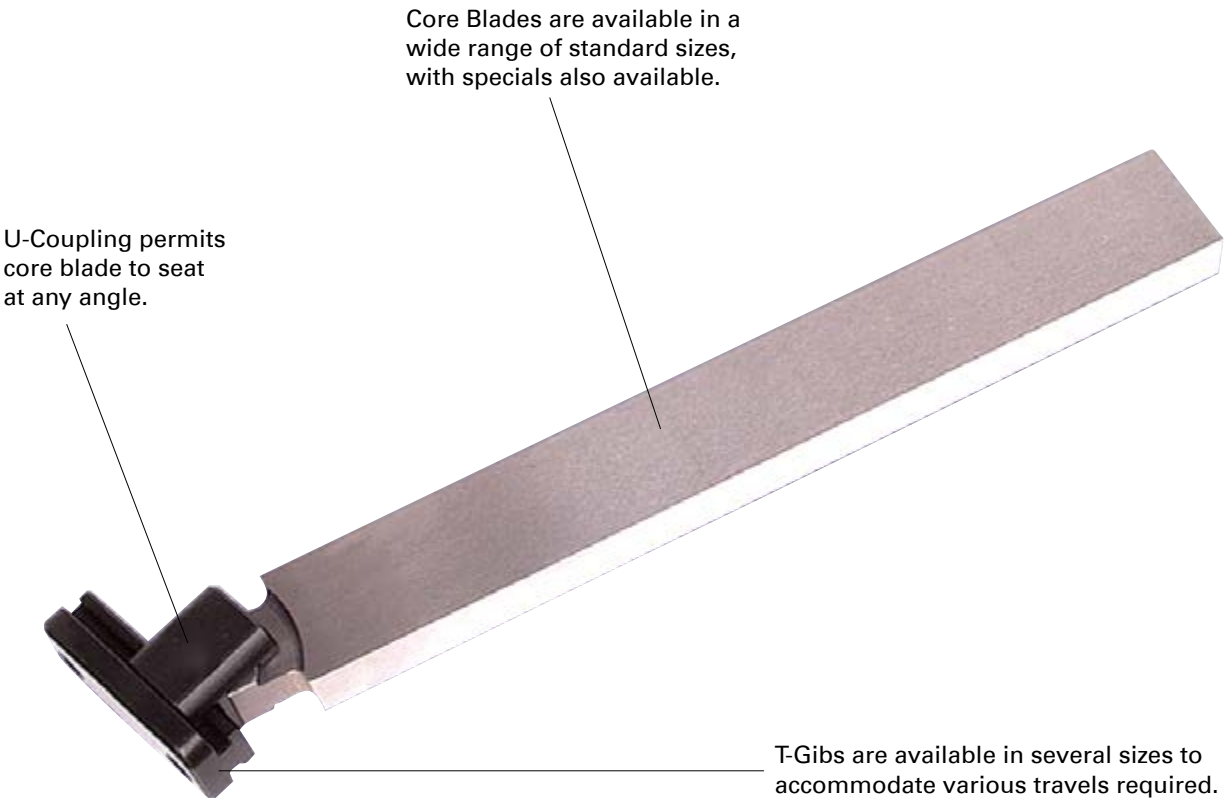

The UniLifter undercut releasing system incorporates a three piece set: Core Blade, U-Coupling, and T-Gib.

Core blades

Mat.: 1.2344, 38-42 HRC

ULB

REF	Old REF	W min	R	H	T min	t	w	l	d
ULBMM10x10L250	**ULB-1001**	10	10	5	10	10	10	250	-
ULBMM15x15L250	**ULB-1002**				15	15	15	250	-
ULBMM10x20L250	**-**				10	20	10	250	-
ULBMM20x10L250	**-**				15	10	20	250	-
ULBMM15x30L400	**-**				15	30	15	400	-
ULBMM30x15L400	**-**				15	15	30	400	-
ULBMM20x20L400	**ULB-1003**				15	20	20	400	-
ULBMM15DL250	**ULB-1101**				10	-	-	250	15
ULBMM10DL250	**-**				10	-	-	250	10

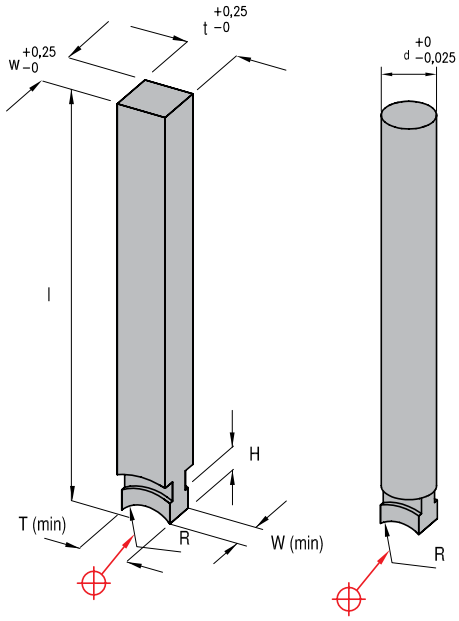

U-Couplings

Mat.: 1.2344, Surface 60-70 HRC, Core 38-42 HRC

ULC

REF	Old REF	W	L	H	RC	R
ULCMM22	**ULC-1001**	22	18	25	6	10

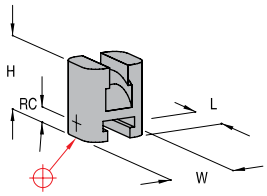

RC: Radius center for radius R

T-Gibs

Mat.: 1.2344, Surface 60-70 HRC, Core 38-42 HRC

ULG

REF	Old REF	W	D*	H	R	M	S	L	Travel allowed
ULGMM10	**ULG-1001**	22	6	13	5	M5x20	10	33	10
ULGMM30	**ULG-1002**	22	6	13	5	M5x20	15	52	30

*0,25mm oversize

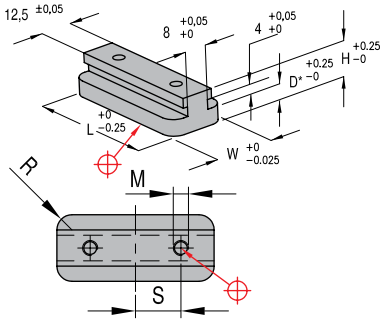

ULB-ULC-ULG

Typical application

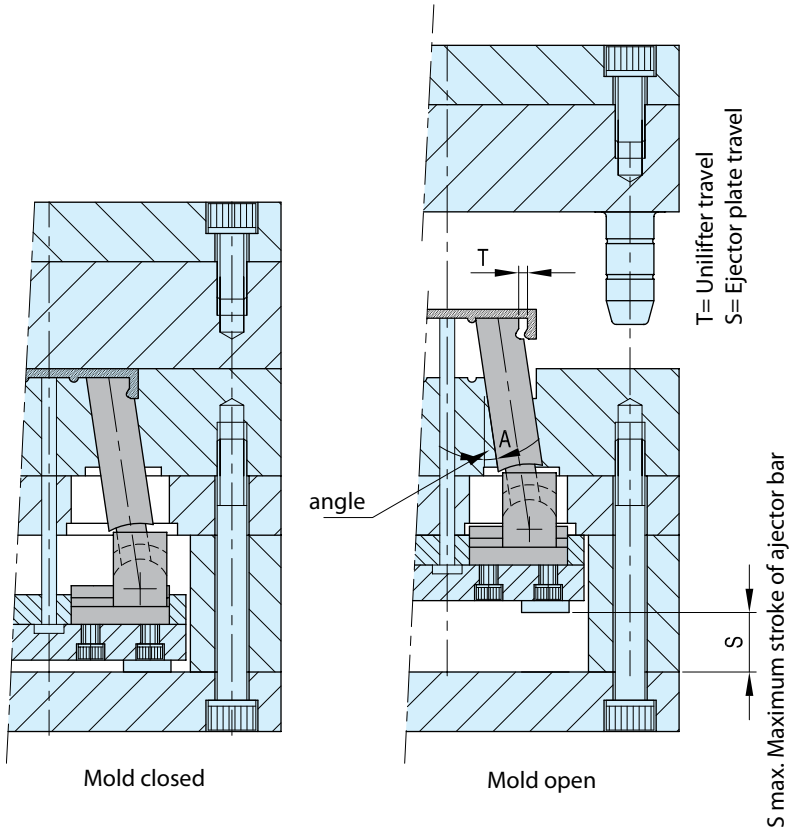

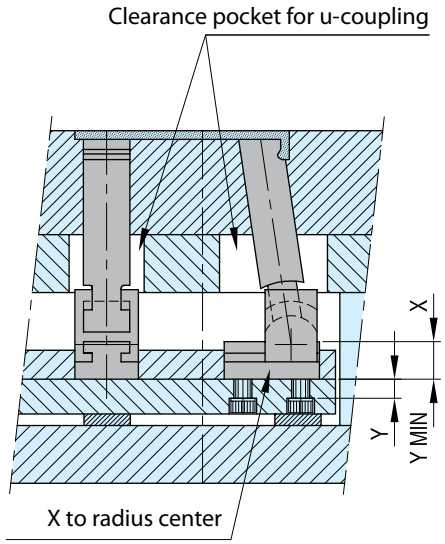

Fig. 1

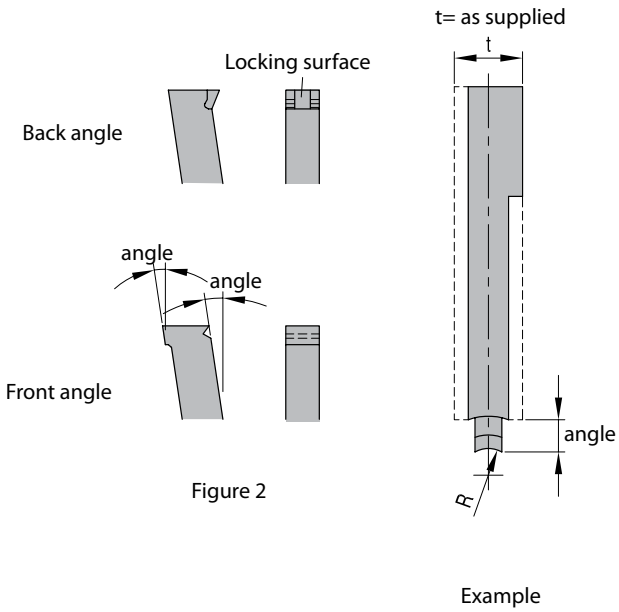

Figure 2

1. General installation
It is recommended that lifters be installed as shown in Fig. 1, with T-Gib mounted to top of ejector plate. The appropriate X and Y dimensions are as follows: X = 12 mm, Y = min 11 mm (min Y dimension prevents mounting screws from interfering with U-Coupling travel).
2. Angles
Designs using angles from 5 to 10° will typically yield the best results. Angles up to 15° are permissible by using lifter guides in the bottom of the support plate. (Lifter guides to be made by moldmaker).
3. Lifter guides
Lifter guides are recommended for designs with angles of 15° (see 2 above) or whenever less than half of the Core blade is bearing in the core insert.
4. Guided ejection
It is recommended that guided ejection be used in all designs.
5. Fit
Recommended clearance for Core blade is 0,025/0,040 mm where permissible.
6. Locking angles
Locking angles (see Fig. 2) may be designed in if required to provide a locking surface to counter against molding pressure.
7. Other dimensions upon request.

MILACRON®

Flexible Cores

Manufactured from spring steel this unit allows the release of small undercuts. It is activated by the ejector plates as a standard ejector. They come with a reference plane and a conical fixing system, which saves cutting the flexible core to fix it.

DME

Every step of the way

Info AW275

Flexible ejector (with mounting thread)

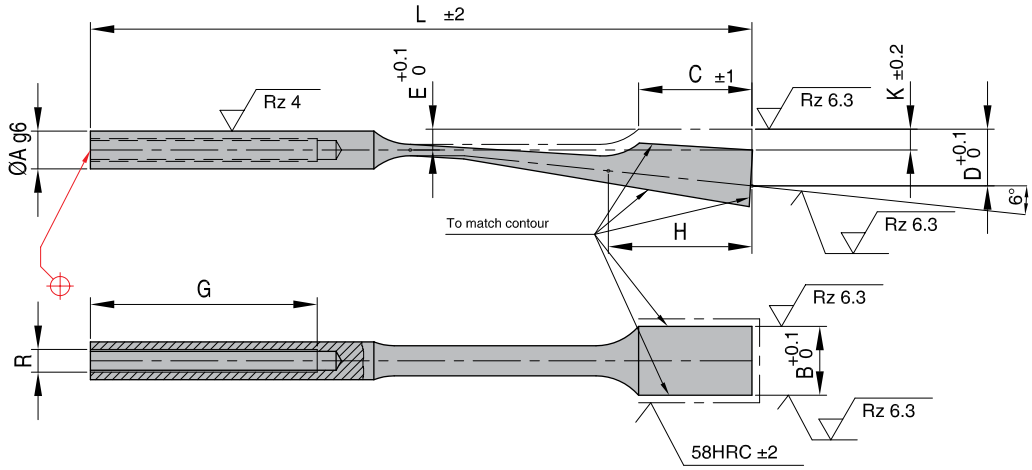

L = Length
G = Shoulder length + head thickness
Standard: DIN16756/ISO8405
Mat.: 1.8159 - 45 ±3 HRC
Max. Temp: 500-550 °C

REF A - B	C	D	E	G	H	K	L	R
AW275 06 - 6,2	22	9	3,5	15	25	3,5	125	M4
AW275 06 - 8,2	22	9	3,5	15	25	3,5	125	M4
AW275 08 - 8,2	25	11,5	4,5	15	30	4,5	140	M5
AW275 08 - 10,2	25	11,5	4,5	15	30	4,5	140	M5
AW275 08 - 12,2	25	11,5	4,5	15	30	4,5	140	M5
AW275 10 - 14,2	30	15	5,5	15	38	5,5	175	M6
AW275 10 - 16,2	30	15	5,5	15	38	5,5	175	M6
AW275 10 - 18,2	30	15	5,5	15	38	5,5	175	M6

Frequently Asked Questions (FAQ)

1 How many shots do the Flexible Cores stand?
As any mobile element, their lifetime depends essentially on their adjustment, as well as the tolerances used (which might be H7/g6). Flexible cores not being properly installed, may last a short period, but if they are installed as they should, they might produce more than 2 million pieces. Please, read our instructions for installation.

2 How is a Flexible Core correctly installed?
Please, carefully read the instructions for installation. Furthermore, we want to stress that it is very important to correctly calculate the Flexible Cores length. If this is machined shorter than its emplacement, once the Flexible Core gets attached to the ejector plates, the central part gets elongated, bringing weakness.

3 What would happen if the ejection stroke is more than C-dimension?
When the Flexible Core head goes free out of its emplacement, due to the rounded shaft and screw attachment, this is prone to twist. This torsionnal movement affects to the thinnest zone which could, after several shots, break. A solution is to use our Keyed Flexible Cores, which have a flat on the shaft that prevents the rotation to occur. You could also make a flat on the rear zone of the Flexible Core shaft yourself, placing a cotter pin to hold it.

Simple Ejection

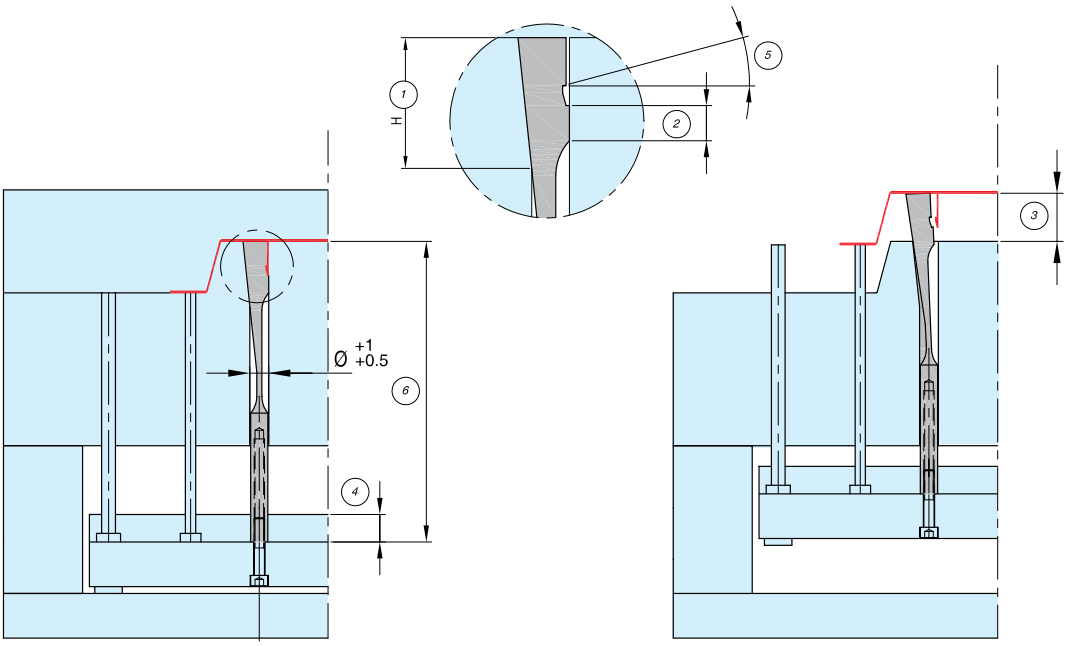

1. This area of support must be the same length as dimension H on the Sprung Core.
2. The adjustment area must be at least 1/3 of the dimension C.
3. The stroke of the sprung Core must be the same or smaller than the dimension C.
4. The plate that houses the shaft of the core must be minimum 15 mm in all cases.
5. The draft angle must be minimum 5°.
6. The core length must be 0,02-0,05 larger than its own hole.
7. After the core is adjusted, remove 0,1 to ensure smooth ejection.

General tolerance of adjustment H7/g6

Ejection With Double Plate

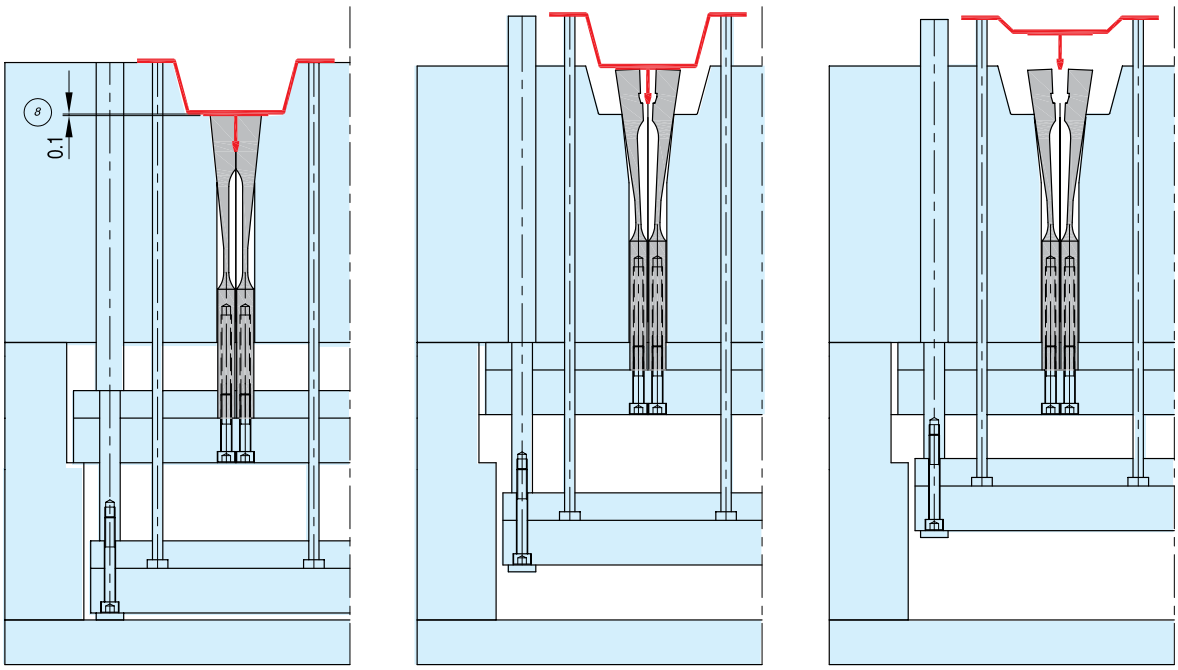

MILACRON®

Info AW280

Flexible ejector (with fixing key)

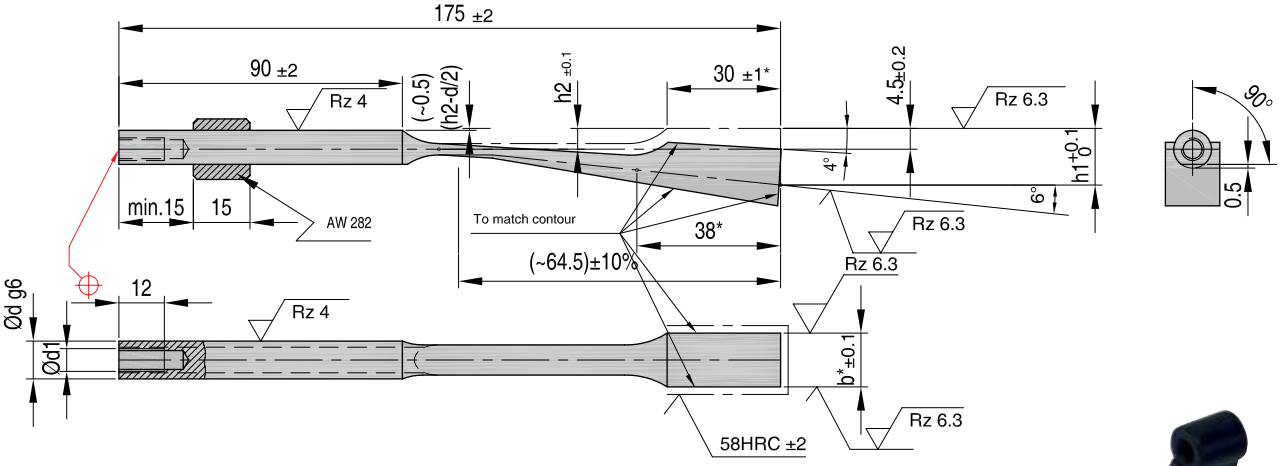

L = Length
G = Shoulder length + head thickness
Standard: DIN16756/ISO8405
Mat.: 1.8159 - 45 ±3 HRC

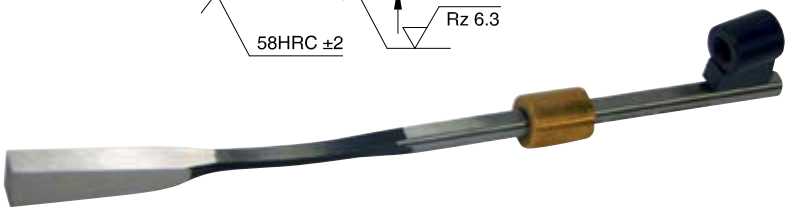

REF d - b*	d1	h1	h2	incl.	incl.
AW280 06 - 6,2	M4	10,0	3,5	AW282 06	AW281 06
AW280 06 - 8,2	M4	10,0	3,5	AW282 06	AW281 06
AW280 08 - 8,2	M5	11,2	4,5	AW282 08	AW281 11
AW280 08 - 12,2	M5	11,2	4,5	AW282 08	AW281 08
AW280 10 - 15,2	M6	13,6	5,5	AW282 10	AW281 10
AW280 10 - 18,2	M6	13,6	5,5	AW282 10	AW281 10

AW281

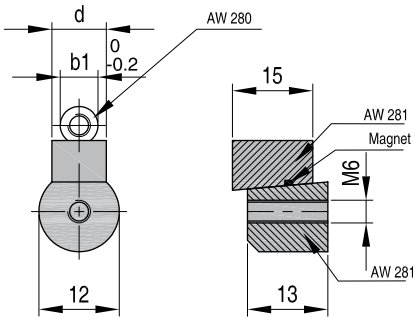

Mat.: 1.8159 - 45 ±3 HRC

REF d	b1	l3
AW281 06	6	13,5
AW281 08	8	14,5
AW281 10	10	15,5

AW282

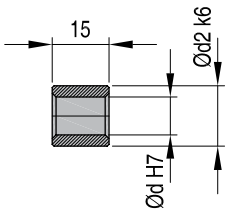

Mat.: Brons

REF d	d2
AW282 06	12
AW282 08	12
AW282 10	16

AW283

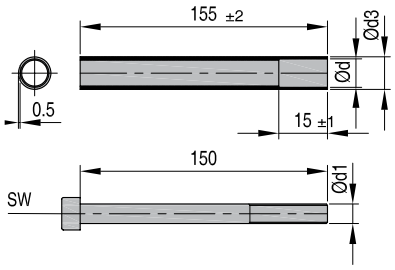

Mat.: 1.7225 - 50 ±3 HRC

REF d	d1	sw	d3	l4
AW283 06	M4	3	08	13,5
AW283 08	M5	4	10	14,5
AW283 10	M6	5	12	15,5

Installation Instructions

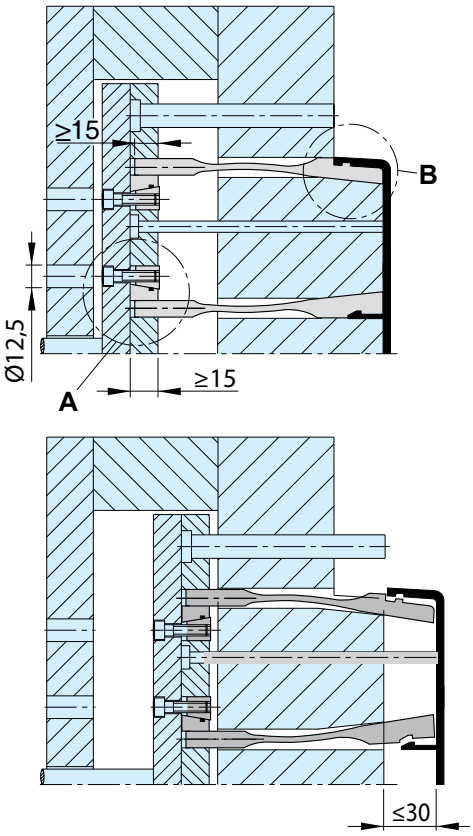

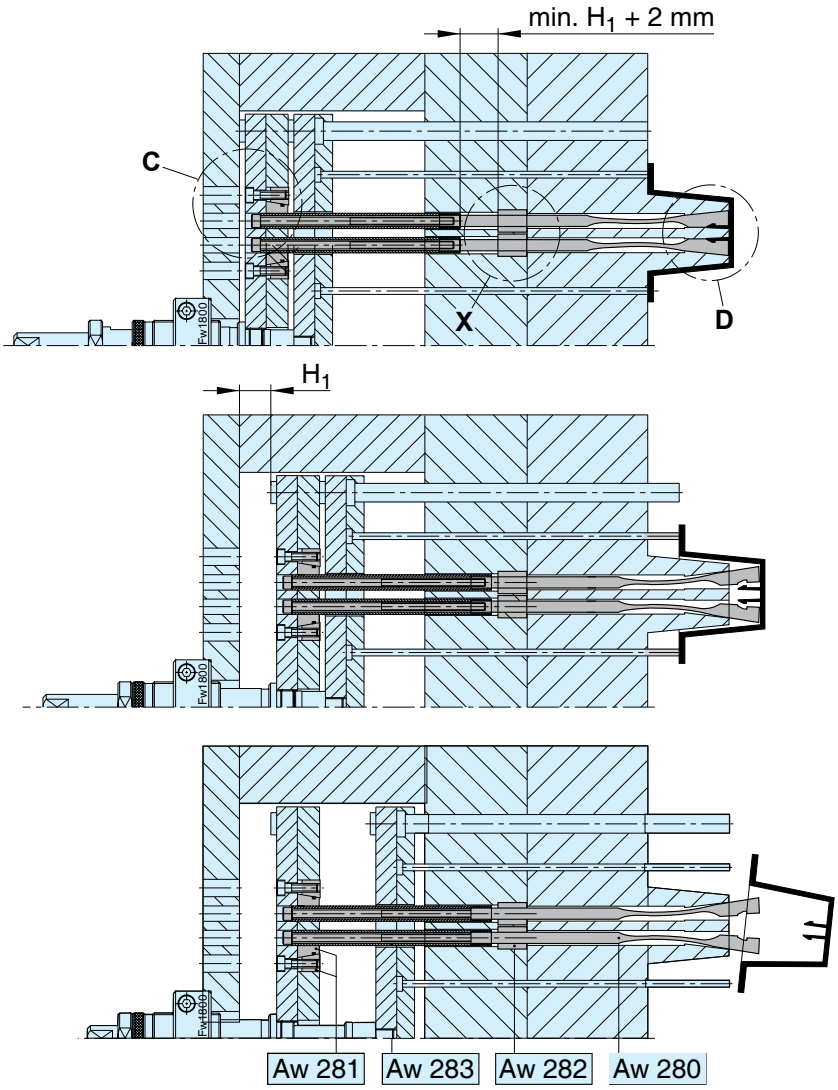

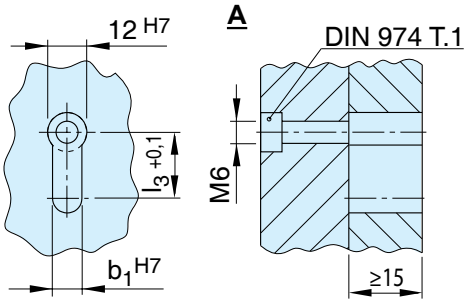

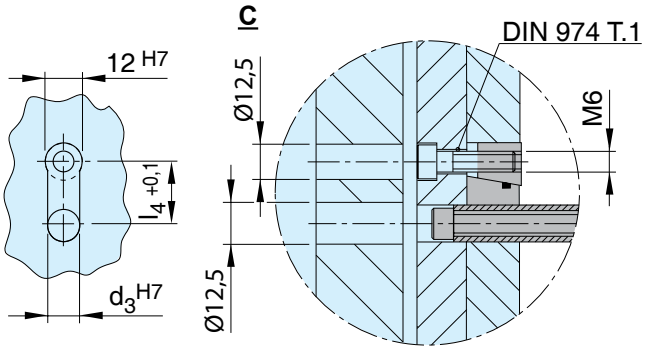

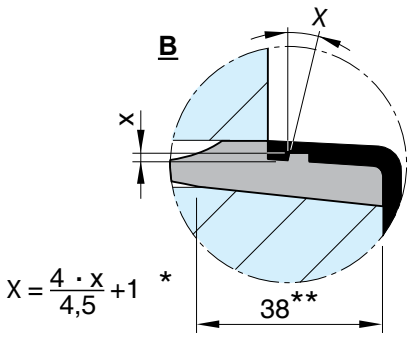

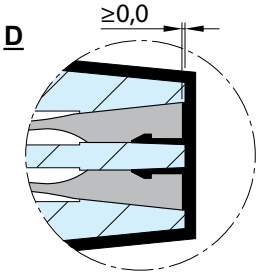

X

For large buckling lengths, please use guide bushes **AW 282**

* = Depending on surface roughness
** = To match the contour

1/10/2007

Special applications require perhaps deviations from the listed standard components **AW 275** and **AW 280**. Please fill your desired dimensions into the chart below. In order to maintain quality features (Service life tec.) the dependency of particular parameters in relation to eachother have to be observed. Agreement between customer and supplier in regard to dimensions or requirements (by example spring travel in relation to spring length) form the basis of well-performing parts.
Mat.: 1.8159 - 45 ±3 HRC

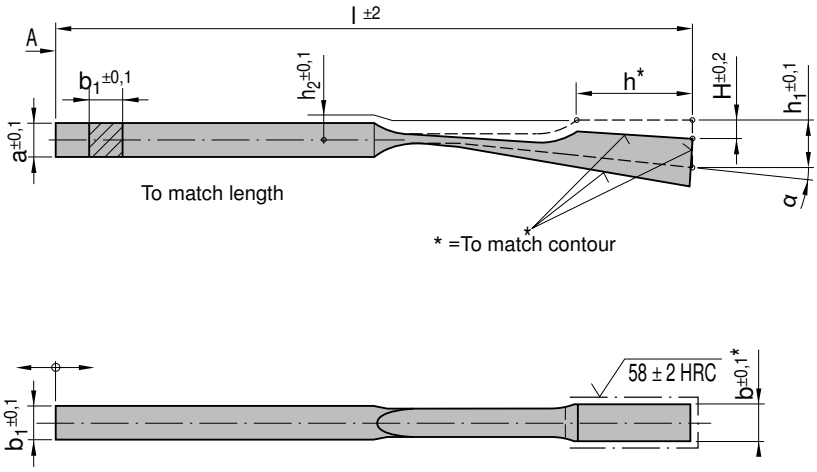

Step 1: Photocopy this form.

Step 2: Specify required tolerances on all dimensions.

Step 3: Contact **DME**

Item prefix	a	b	b1	h	h1	h2	H	l	⍰	Quantity	Delivery
AW285											

Special Ejectors

Comments:

.....

.....

.....

Company: .....

Contact:.....

Tel.:.....

Fax:.....

Quantity:.....

Mat.:.....

Hardness:..... HRC

Delivery date: .....

Nitrite: ☐Yes

Signature:.....

Order Number:.....

Flexicore® undercut releasing system

Info

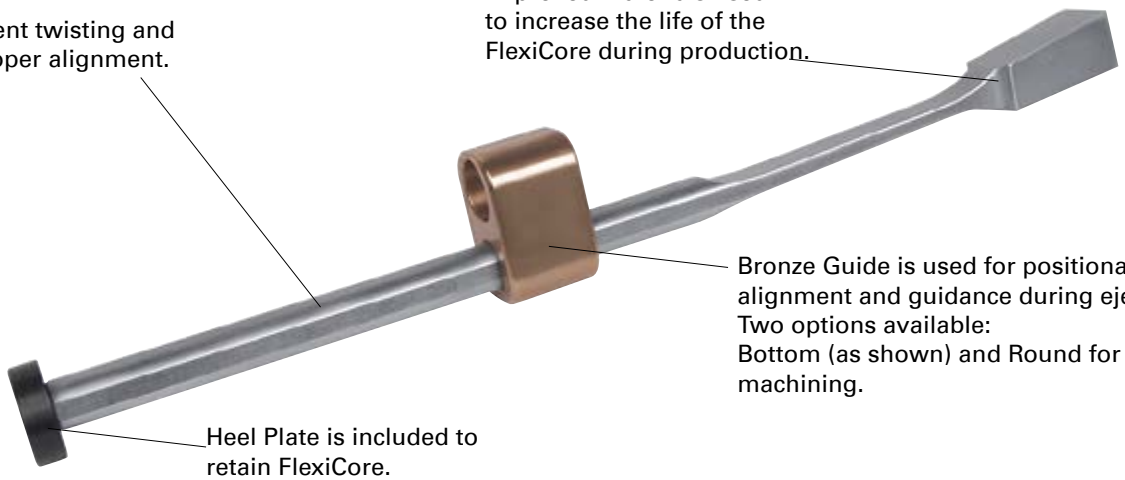

FlexiCore Assembly includes: FlexiCore, Bronze Guide (Bottom or Round), Heel Plate, and Flat Head Cap Screw.

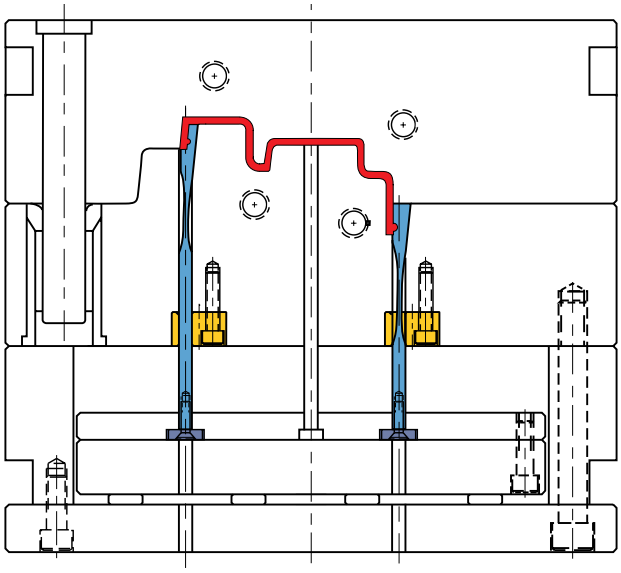

Mold closed

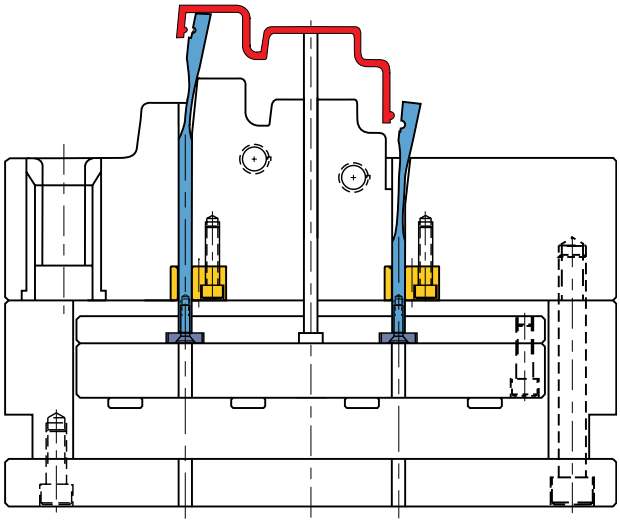

Mold open

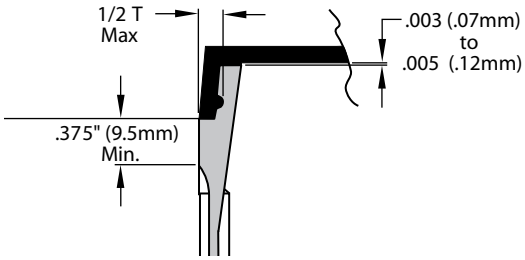

Application Guidelines:

The FlexiCore diameter (D) must be within the Guide prior to ejection as shown above.
Only surface treatments applied at low temperatures such as Electroless Nickel-based or chromium deposition treatments are permitted.
Maximum temperature is 125° C.
Please contact Engineering to review any designs if questions arise or if your application differs from the examples shown.

MILACRON®

FLXA

Flexicore® bottom guide assembly

FlexiCore: AISI 4340 with thin, dense Chromium treatment
Guide: CA954 Solid Bronze
Heel Plate: AISI 1018

Assemblies include: FlexiCore, Bottom Guide, Heel Plate, and Flat Head Cap Screw. Assembly components also sold individually.

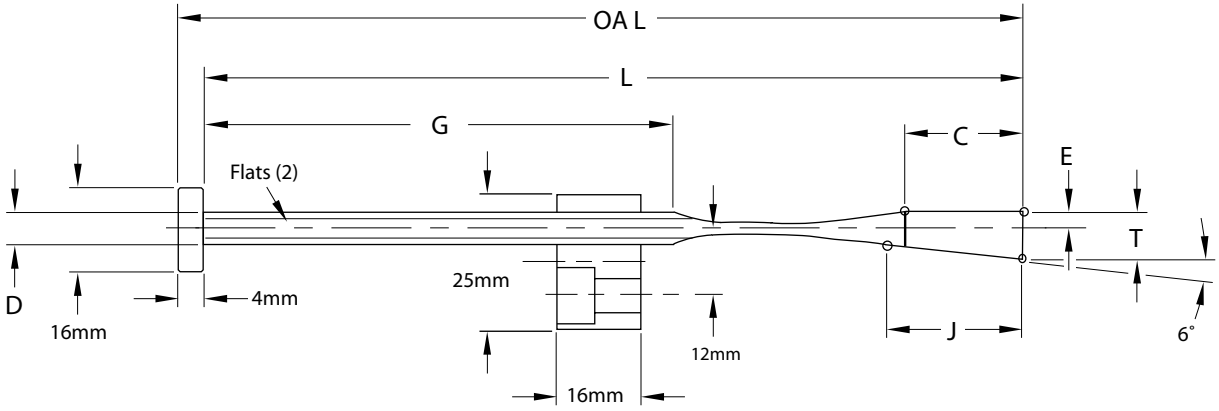

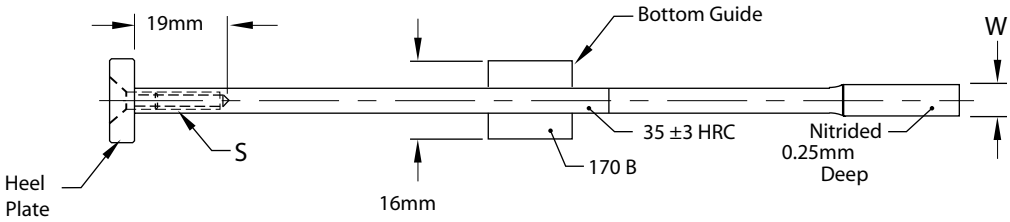

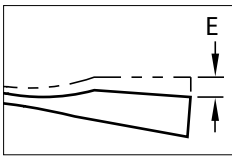

"E"= maximum travel at the top of the FlexiCore. Expected travel is reduced by the tangent of 6˚ along the "C" dimension.

REF	T +0,05 -0,00	W ±0,25 -0,00	L +0,25 -0,00	OAL REF	D +0,00 -0,25	C ±0,35	E	G +0,25 -0,00	J	S
FLXA9x6L160	9	6,2	162,5	166,5	5,94	22	3,5	88,6	24,3	M4-0,7x20
FLXA9x8L160	9	8,2	162,5	166,5	6,35	22	3,5	88,4	24,3	M4-0,7x20
FLXA11x10L200	11,5	10,2	200,0	204,0	7,92	26	4,5	111,2	26,0	M5-0,8x20
FLXA11x12L200	11,5	12,2	200,0	204,0	7,92	26	4,5	111,2	26,0	M5-0,8x20
FLXA12x14L200	12,5	14,2	200,0	204,0	7,92	30	4,5	107,2	28,5	M5-0,8x20
FLXA12x16L200	12,5	16,2	200,0	204,0	7,92	30	4,5	107,2	28,5	M5-0,8x20

Flexicore® double actuation

FLXDA

FlexiCore: AISI 4340 with thin, dense Chromium treatment
Guide: CA954 Solid Bronze
Heel Plate: AISI 1018

The double action bottom guide allows the FlexiCore System to be used to release boss details with undercuts. FlexiCore Double Assembly includes: two FlexiCores, one Bottom Guide, one Heel Plate, and two Low Head Cap Screws.

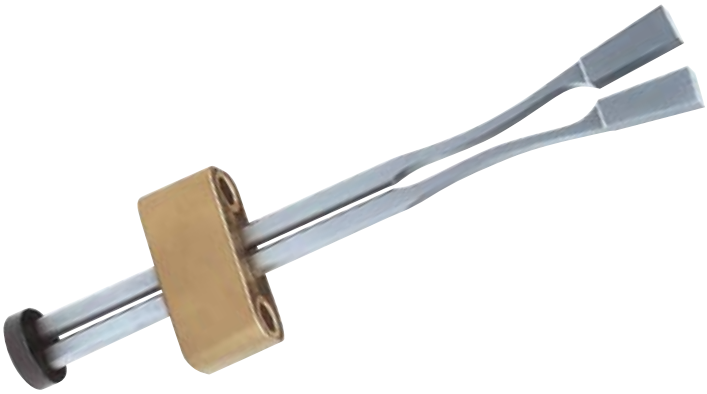

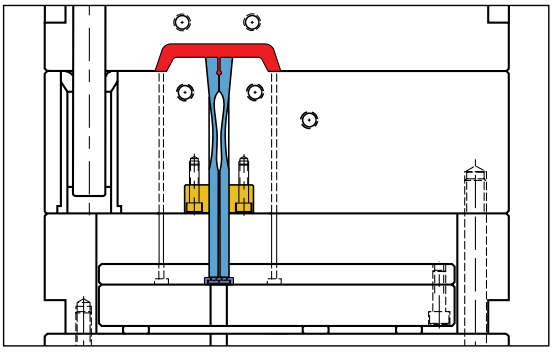

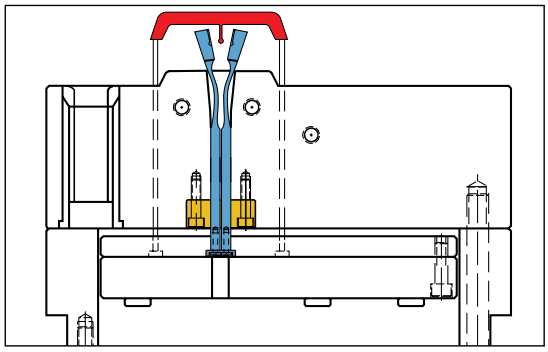

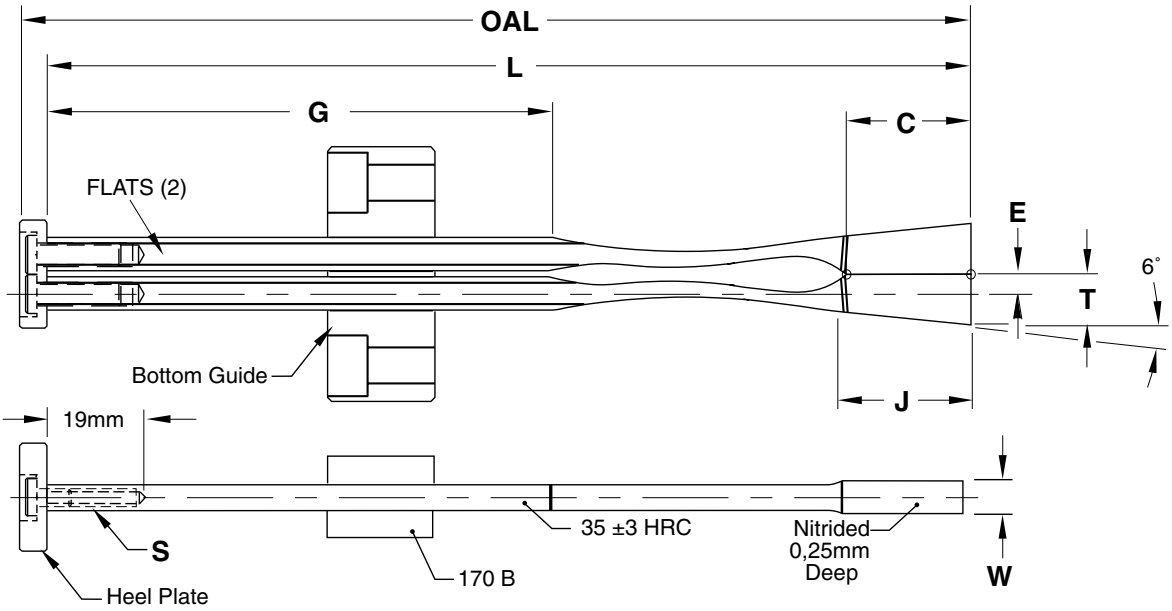

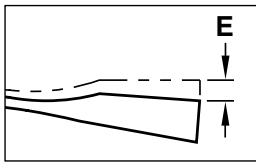

"E"= maximum travel at the top of the FlexiCore. Expected travel is reduced by the tangent of 6˚ along the "C" dimension.

REF	T +0,05 -0,00	W ±0,25 -0,00	L +0,25 -0,00	OAL REF	D +0,00 -0,25	C ±0,35	E	G +0,25 -0,00	J	S
FLXDA9x6L160	9	6,2	162,5	166,5	5,94	22	3,5	88,6	24,3	M4-0,7x20
FLXDA11x12L200	11,5	12,2	200,0	204,0	7,92	26	4,5	111,2	26,0	M5-0,8x20
FLXDA12x14L200	12,5	14,2	200,0	204,0	7,92	30	4,5	107,2	28,5	M5-0,8x20
FLXDA12x16L200	12,5	16,2	200,0	204,0	7,92	30	4,5	107,2	28,5	M5-0,8x20

FLXWBM

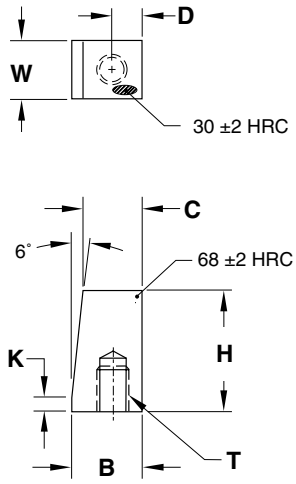

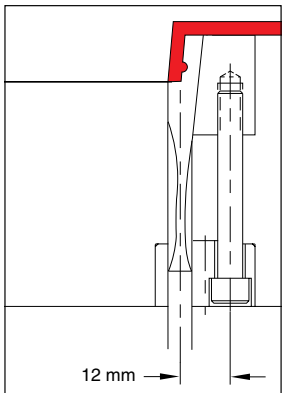

The Wear Block installs from parting line, utilizing the same screw hole location as the bottom guide.

Wear blocks

Mat.: P-20 Pre-Hard, Nitrided

REF	W +0,05 -0,00	D ±0,25	B +0,25 -0,00	C +0,25 -0,00	H	K	T Thread
FLXWBM-6	6,2	7,2	15,9	13,55	25,4	2,9	M5-0,8
FLXWBM-8	8,2	7,2	15,9	13,55	25,4	2,9	M6-1,0
FLXWBM-10	10,2	7,2	14,4	12,05	25,4	2,9	M6-1,0
FLXWBM-12	12,2	7,2	14,4	12,05	25,4	2,9	M6-1,0
FLXWBM-14	14,2	7,2	15,2	12,11	33,2	3,5	M6-1,0
FLXWBM-16	16,2	7,2	15,2	12,11	33,2	3,5	M6-1,0

FLXXM

Extensions

Mat.: 4140 Pre-Hard

REF	L (mm) +0,25 -0,00	D +0,00 -0,12	B	A
FLXXM4L50	50	6	M4-0,7	4,8
FLXXM4L100	100	6	M4-0,7	4,8
FLXXM5L50	50	8	M5-0,8	6,3
FLXXM5L100	100	8	M5-0,8	6,3

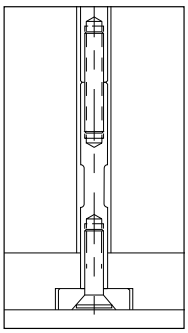

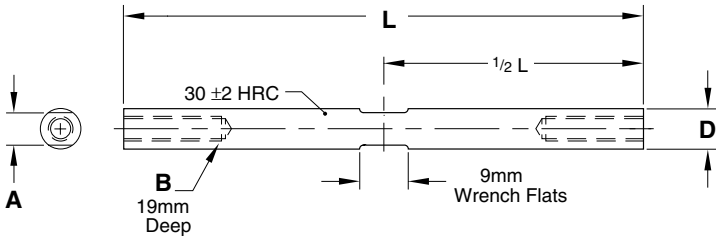

FLXBG - FLXRG

Replacement guides

Mat.: CA954 Solid Bronze

FLXBG

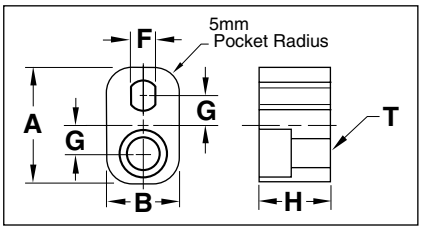

REF	A	B	H	F	G	T
FLXBG-6	25	16	16	4,8	6	M5-SBLT
FLXBG-8	25	16	16	5,0	6	M6-1
FLXBG-10	25	16	16	7,3	6	M6-1

FLXRG

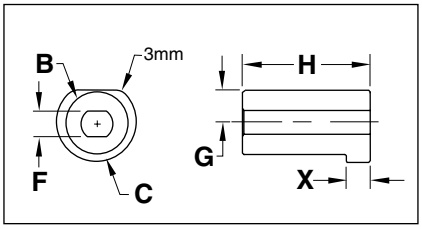

REF	B	C	H	F	X	G
FLXRG-6	12	16	25	4,8	5	6
FLXRG-8	12	16	25	5,0	5	6
FLXRG-10	16	20	25	7,3	5	8

Replacement heel plates

Mat.: AISI 1018 Black Oxided

FLXHP

REF	K	P	S
FLXHP-4	16	4	M4-0,7
FLXHP-5	16	4	M5-0,8

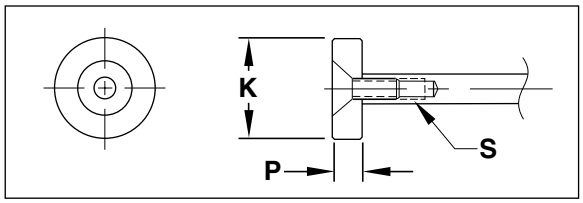

Screw included.

Replacement guides: double actuation

Mat.: CA954 Solid Bronze

FLXDBG

REF	A	B	H	F	G	R	S	T
FLXDBG-6	45	16	20	1,8	3,5	5	16,2	M6-1
FLXDBG-12	48	16	20	7,3	4,5	5	17,2	M6-1

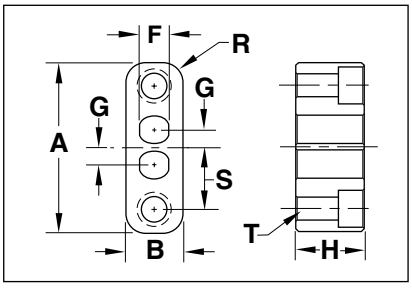

Replacement heel plates: double actuation

Mat.: AISI 1018 Black Oxided

FLXDHP

REF	C	K	P	S
FLXDHP-4	7	20	6	M4-0,7
FLXDHP-5	9	22	6	M5-0,8

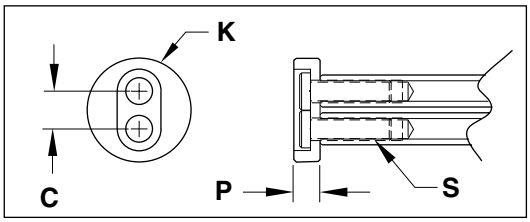

Screws included.

MILACRON®

Collapsible Cores

DME

Every step of the way

Info CCM-CC

General description of the Collapsible Cores

It is over 30 years since DME first introduced the Collapsible Core and today it still continues to be a major influence for molding plastic parts requiring internal threads, undercuts, cut-outs etc. During this time a lot of technical knowledge and experience has been gained from many applications tackled, some of which have been very complicated. This "Know how" has been constantly passed on to the user, either through new developments, application improvements or suggestions for new applications. One such development is the new range smaller diameters which complete the series of Collapsible Cores. The Collapsible Cores now range from 18 mm to 107 mm, for the outer diameters with the corresponding inner diameter ranging from 16 mm to 85 mm. The effective collapse ranges from 1.1 mm to 4,2 mm per side at the tip of the Core, depending on the diameter of the Core.

Operation

After cooling, the mold opens and the ejector plate assembly moves forward as far as the stop. This causes the core sleeve to move away from the centre pin and the positive collapsed sleeve to engage, which ensures that all segments have collapsed. However, the molded part remains or hangs until the stripper plate is moved forward to eject the components. This is usually carried out by the activation of two double acting air cylinders mounted on the ejector plates and connected to the stripper plate on the outside of the mold. The stripper plate is then retracted using the two air cylinders before the mold is closed. When closing the mold, one has to ensure that the ejector plates are returned before the mold is fully closed. This can be achieved by the use of early ejector returns. The core sleeve is returned to the molding position thus preventing damage to the Collapsible Cores. When the mold is fully closed the next cycle can begin. When using Collapsible Cores the designer has a product which offers many opportunities for producing many variations of molded caps. The result is a mold which functions reliably and economically irrespective of whether it concerns a single or multiple cavity mold. Parts with internal protrusions, dimples, interrupted threads and cut-outs can be economically produced on a high or low volume basis. It should be noted that due to the design of the Mini Collapsible Core only interrupted threads and undercuts can be produced. The interruptions consist of three small slots with width "J" (See table), but in most cases this does not imply any technical disadvantages.

Design Procedure

The following steps are used to determine if a part can be molded on the Mini or Standard Collapsible Core:

a) Calculate the expected actual shrinkage "S" = part Ø x shrinkage (%) "S1" = part length x shrinkage (%)

b) Determine that the part minor diameter "A" is not less than "A min" (See table and Fig 1)

c) Determine that the part major diameter "B" is not greater than "B max" (See table and Fig 1)

d) Determine that thread depth or part undercut at "L" does not exceed the calculated dimension "C" (see Table and Fig.1). The collapse available decreases from the front of the core at a rate of 0,02 mm/mm. When the amount of collapse "C" of the Mini or Standard Collapsible Cores is insufficient, Collapsible Cores of the same size but with a greater collapse can be obtained.

Type	CK Max.
CCM-0001	1.45 mm/side
CCM-0002	1.60 mm/side
CCM-0003	1.80 mm/side
CC 125 PC	0.80 mm/side
CC 150 PC	1.07 mm/side
CC 175 PC	1.20 mm/side
CC 250 PC	1.20 mm/side

Type	CK Max.
CC 252 PC	1.60 mm/side
CC 352 PC	2.10 mm/side
CC 402 PC	2.65 mm/side
CC 502 PC	3.20 mm/side
CC 602 PC	3.75 mm/side
CC 652 PC	4.06 mm/side
CC 702 PC	4.32 mm/side

CK = Collapse per side at top of core.

e) Determine that part depth "D" (Fig 1) does not exceed the value "D" given in the table. Dimension "K min" of the table must be equal to or larger than "K min".

Material and hardness

a) The centre pin is manufactured from high quality alloy steel 1.2436, hardened to 60-65 HRC. Centre pins for Standard as well as for Mini Collapsible Cores are fitted to a specific core and cannot be interchanged. This is due to the centre pin and core sleeve being assembled and ground together.

b) Core sleeves are manufactured in a 1.2363 steel (AISI 01) and hardened to 55-60 HRC. All centre pins and core sleeves carry a serial number. Always verify the serial number prior to grinding or final assembly.

c) The positive collapse sleeve is manufactured in tool steel and hardened to 55 ± 5 HRC. It is designed to function when the Collapsible Core fails to collapse independently upon withdrawal of the centre pin. Its aim is an additional and necessary safety factor.

What materials can be molded?

All commonly used thermoplastic molding resins. For many years filled and non-filled molding resins have been successfully molded. Special requirements have to be taken into consideration when PVC is processed. When using the Mini or Standard Collapsible Cores for processing this material it is recommended you contact **DME**.

Info CCM-CC

Part design - special requirements

For successful operation the design of the part must fulfil the following requirements:

a) In contrast with the Standard Collapsible Core it is not possible to mold parts with full threads with the Mini Collapsible Core. The three remaining "marks" on the part result from the three interrupted areas with width "J" of the non-collapsing centre pin blades. Make sure that the top of the centre pin protrudes beyond the top of the core sleeve.

b) The centre pin must protrude beyond the core face by at least the distance "F". Protrusions down to "F min" are acceptable but "F max" is recommended. For "F min" and "F max" see Table or Collapsible Core dimensions leaflet. Radius "R" is most important. For "R min" and "R max" see Collapsible Core dimension drawing.

c) There must be no undercuts on the face of the core segments. This will prevent the Collapsible Core from functioning.

d) Undercuts on the face of the pin must not interfere with full radial movement of the core. They must be located either forward of the core face or within a diameter smaller than "G" (see Table, Fig 3; max 4 mm - see Collapsible Core dimension drawing). In no case should the undercuts be so deep that they come close to the cooling lines in the centre pin. For special requirements please contact **DME**.

e) The core face must have a draft of at least 3° starting no further than 0.8 mm from the top of the pin. A greater draft is desirable when "B" is near "B max" (ex. 4-5°).

f) All undercuts should be drafted. A minimum draft of 5° is required (see Table, fig 3), more is recommended. Interrupted undercuts also require a side draft of at last 5°.

g) Means must be provided for carrying the molded part off of the collapsed core at the completion of the ejection stroke. This is normally done by providing a ring projection (0.25 x 0.25 mm) on the face of the stripper stroke. The part must not drag over the core (see detail Y on Collapsible Core dimensions leaflet).

h) As in conventional practice, sharp interior corners must be avoided to prevent stress concentration in the steel. Never permit a ground thread to run out through the face of the core. This leaves a knife edge of steel that will break off in time.

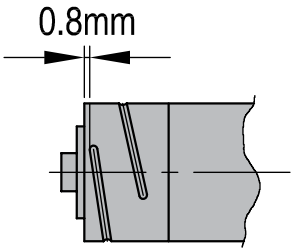

CCM

Collapsible mini-cores

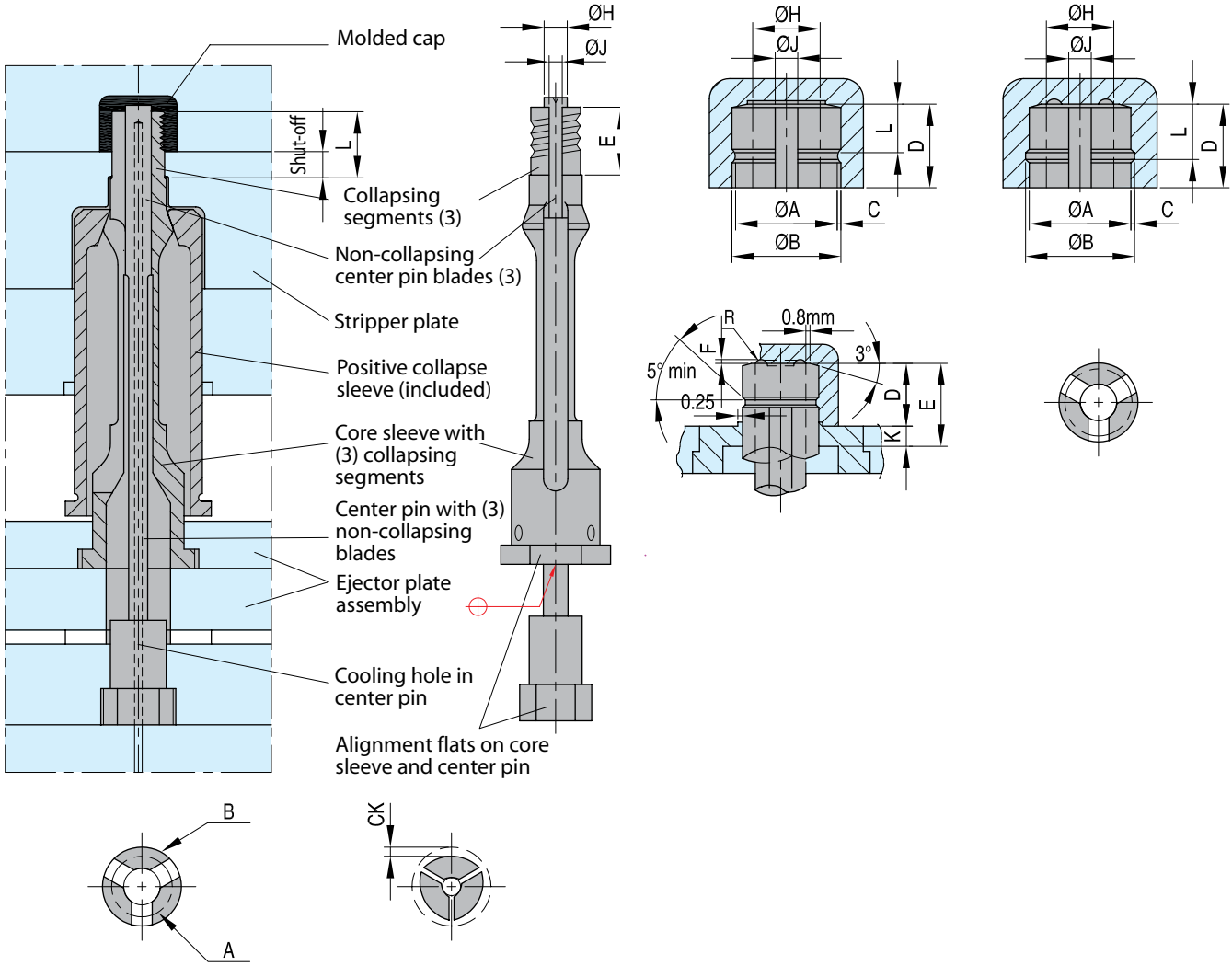

REF	A. Part Minor Ø (min.)	B. Part Major Ø (max.)	C. Maximum part under-cut at L	D. Maximum part depth	E. Length of fitted sur-face on core	F. Pin pro-trusion, min.	G. Inside diameter collapsed core nom	H. Pin diameter at face (nominal)	K. Stripper bushing shut-off	J. Width of non-collapsing	R. Pin tip radius	S. Material shrinkage
CCM 0001	10,80-S	16,38-S	1,30-(0,02L+0,5S)	21,60-S1-K	21,60	0,4 (0,8 max)	2,30	7,60	4,00	4	0,20	S= Shrinkage factor (%) x Part diam-eter (mm) S1= Shrinkage factor (%) x Part length (mm)
CCM 0002	14,22-S	20,45-S	1,45-(0,02L+0,5S)	21,60-S1-K	21,60	0,4 (0,8 max)	4,60	10,70	4,83	4	0,20	
CCM 0003	18,03-S	24,51-S	1,50-(0,02L+0,5S)	25,40-S1-K	25,40	0,4 (0,8 max)	7,90	14,20	5,08	4	0,20	

Collapsible cores

CC

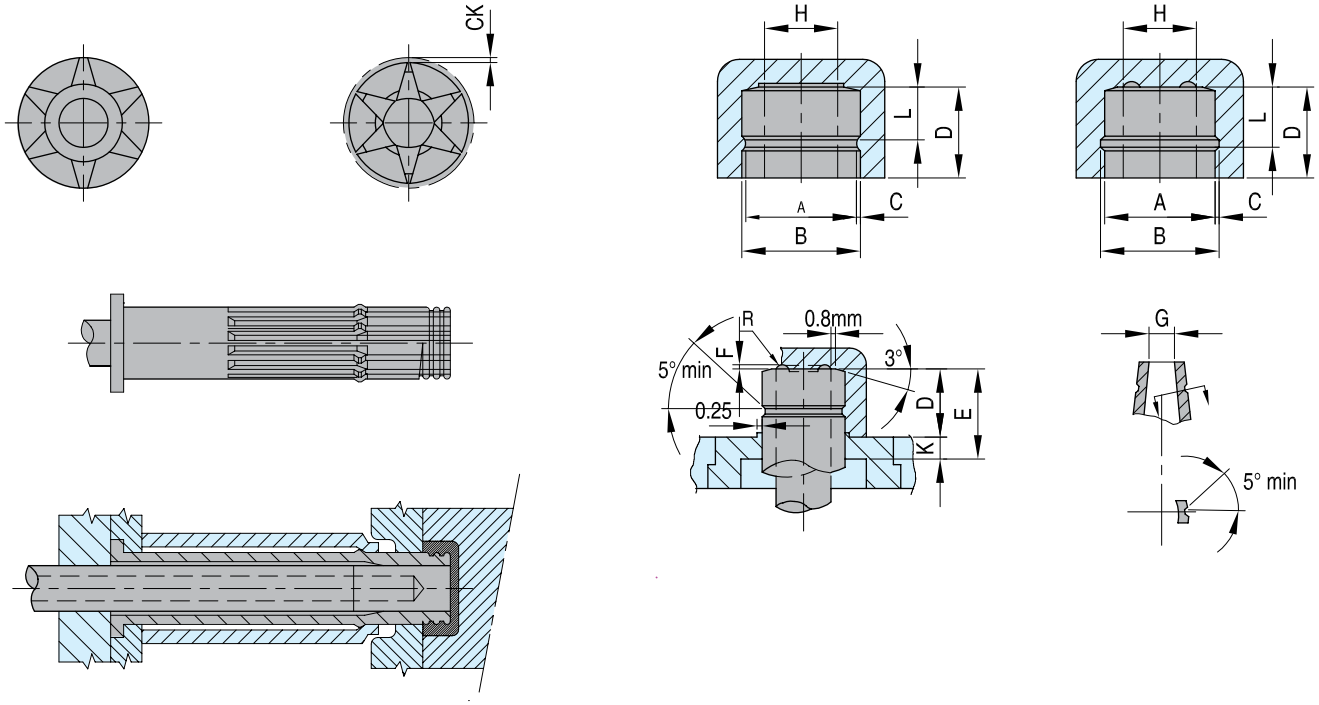

REF	A. Part Minor Ø (min.)	B. Part Major Ø (max.)	C. Maximum part under-cut at L	D. Max. part depth	E Max. molded length	F. Pin protru-sion, min.	G. Inside diameter collapsed core nom	H. Pin diam-eter at face (nominal)	K. Stripper bushing shut-off	R. Pin tip radius	S. Material shrinkage
CC 125 PC	15,75-S	18,29-S	0,69 - (0,02L+0,5S)	E-K	20,30	0,4	5,3	12,45	4	0,20-0,25	S= Shrinkage factor (%) x Part diam-eter (mm) S1= Shrinkage factor (%) x Part length (mm)
CC 150 PC	17,78-S	21,59-S	0,94 - (0,02L+0,5S)	E-K	25,40	0,4	5,8	14,73	4	0,20-0,25	
CC 175 PC	19,30-S	24,64-S	1,09 - (0,02L+0,5S)	E-K	25,40	0,4	7,4	16,26	4	0,20-0,25	
CC 250 PC	23,10-S	32,25-S	1,09 - (0,02L+0,5S)	E-K	29,21	0,4 (1,9 max)	10,2	19,9	4	0,20-0,25	
CC 252 PC	25,65-S	35,30-S	1,40 - (0,02L+0,5S)	E-K	29,21	0,4 (1,9 max)	11,9	22,5	4	0,25-0,30	
CC 352 PC	32,26-S	44,19-S	1,73 - (0,02L+0,5S)	E-K	35,56	0,5 (1,9 max)	15,0	28,1	4	0,25-0,35	
CC 402 PC	40,46-S	55,42-S	2,29 - (0,02+0,5S)	E-K	43,18	0,8 (1,9 max)	18,4	35,25	5	0,30-0,35	
CC 502 PC	52,32-S	71,12-S	2,92 - (0,02L+0,5S)	E-K	48,26	0,9 (2 max)	24,0	44,45	6 (min.4)	0,35-0,40	
CC 602 PC	66,29-S	89,78-S	3,55 - (0,02L+0,5S)	E-K	60,96	1,1 (2,0 max)	30,5	55,25	6,5	0,50-0,60	
CC 652 PC	73,41-S	96,52-S	3,81 - (0,02L+0,5S)	E-K	60,96	1,5	34,3	62,23	7	0,60-0,70	
CC 702 PC	85,09-S	107,31-S	4,19 - (0,02L+0,5S)	E-K	60,96	1,5	41,9	73,02	7	0,60-0,70	

CC

Collapsible cores

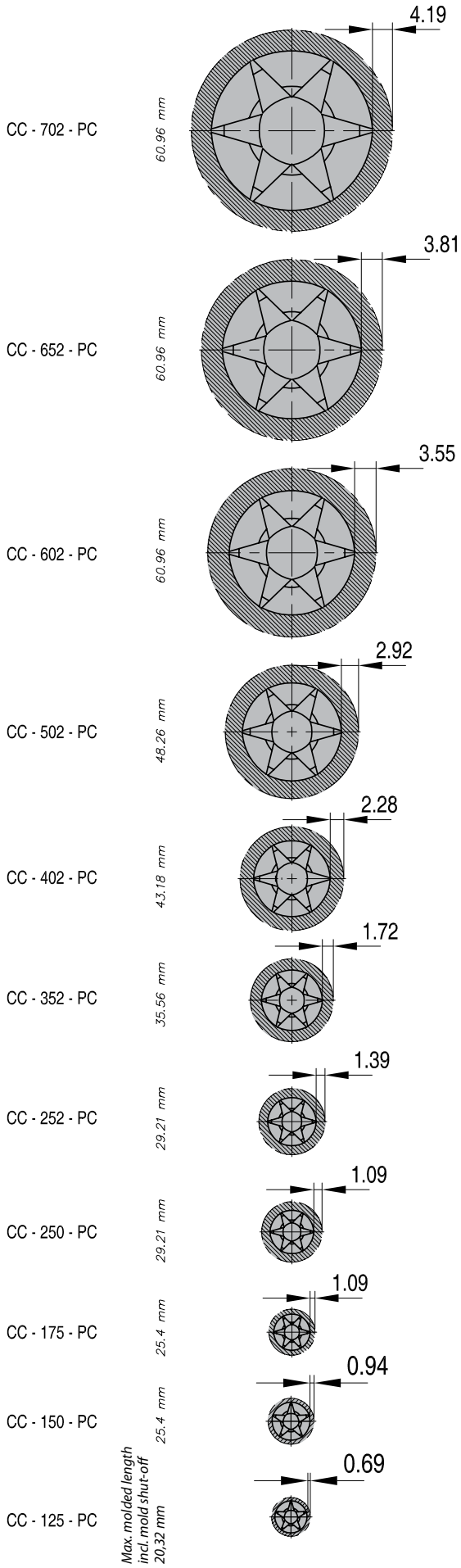

Collapsible cores

CC

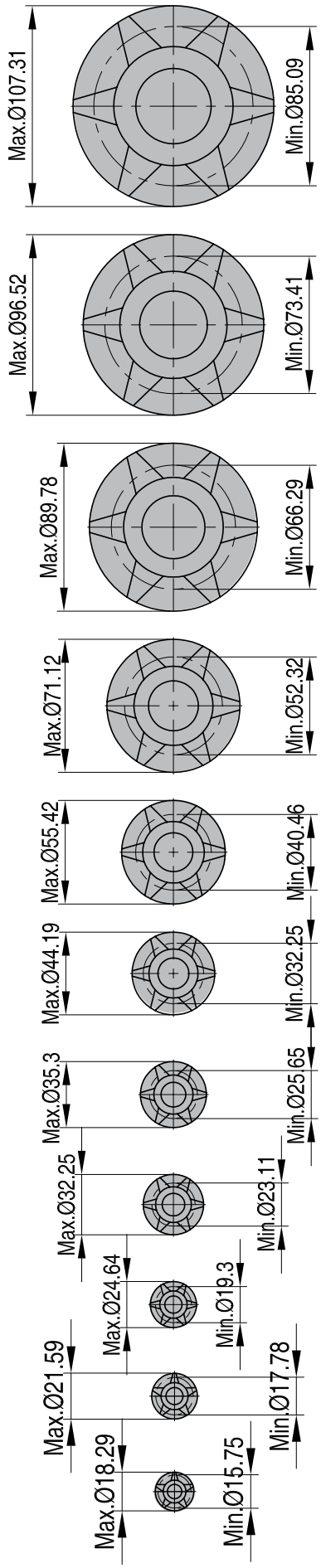

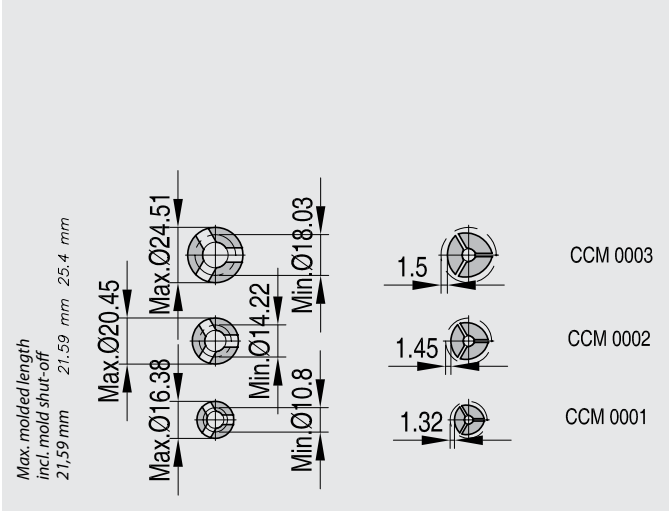

MILACRON®

EXCAV

Ex-Cav™ System

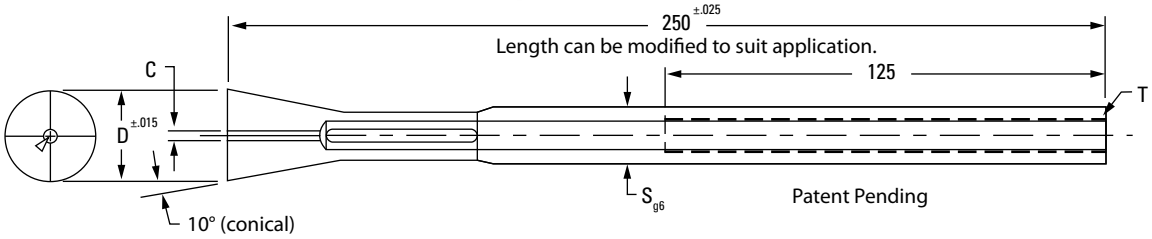

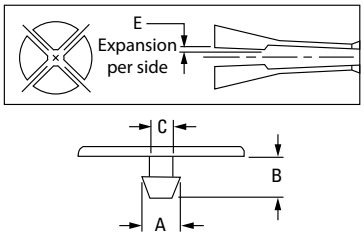

REF	D Ex-Cav diameter	A Max. Part Diameter -10°/side	B Max. molding length	C Min. part inner diameter	E Expansion per side	F Min. Wall Thickness	S Body diameter	T Thread	X Min. ejection stroke (Next page)
EXCAV20	20	14	13	2,5	1,6	3	14	M8	15
EXCAV26	26	18	20	3,5	2,5	4	16	M10	15
EXCAV38	38	30	27	4,0	3,0	4	27	M18	20
EXCAV50	50	40	39	5,5	3,5	5	34	M24	20

All dimensions and tolerances in millimeters. Mounting kits sold separately (see below). Expandable Cavity sizes not shown on this table are available by special order.

EXC ... BH/BP

Mounting Kits

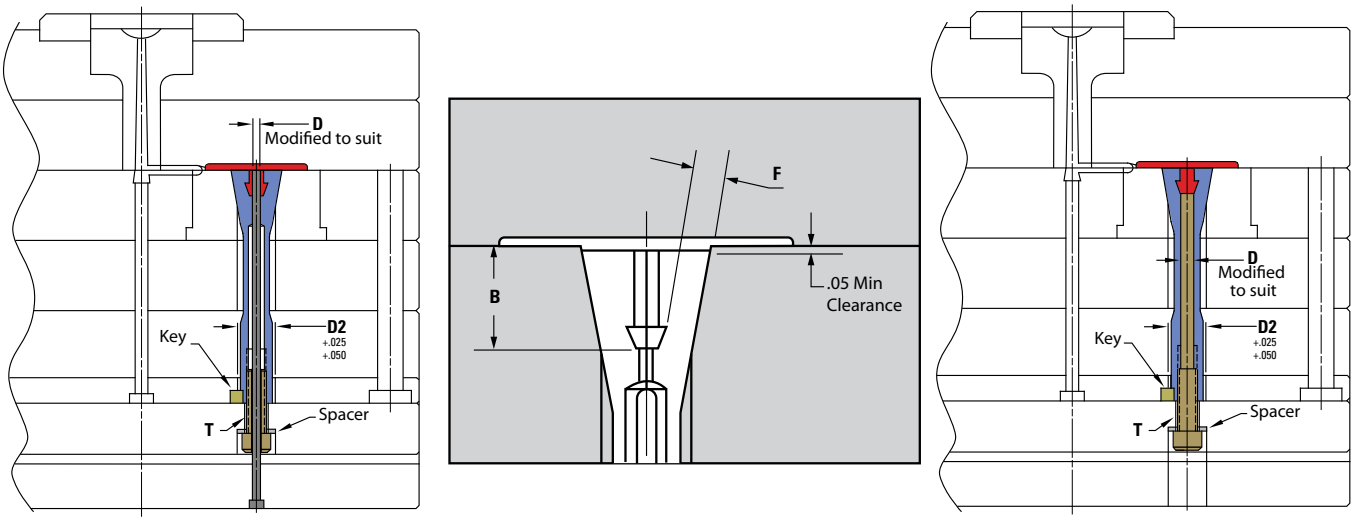

Hollow Bolt Mounting Kit Includes:

- Key (7 Thk. × 8 × 40)
- Hollow Bolt
- Standard DIN H-13(~1.2344) Ejector Pin (400mm long)
- Spacer

Pin Bolt Mounting Kit Includes:

- Key (7 Thk. × 8 × 40)
- Threaded Bolt/Pin (H-13 (~1.2344), 40-44 HRC, 280mm long)
- Spacer

REF	D Nominal Pin Diameter	T Bolt size	S Spacer Size (ID × OD × Thk)	D2	Hollow Bolt Kit Number
EXCAV20	3,5	M8-1,25 × 40	8 × 22 × 4	14	**EXC20BH**
EXCAV26	4,0	M10-1,5 × 40	10 × 23 × 4	16	**EXC26BH**
EXCAV38	10,0	M18-2,5 × 50	19 × 33 × 6	27	**EXC38BH**
EXCAV50	14,0	M24-3 × 55	25 × 42 × 6	34	**EXC50BH**

REF	D Nominal Pin Diameter	T Bolt size	S Spacer Size (ID × OD × Thk)	D2	Hollow Bolt Kit Number
EXCAV20	6,0	M8-1,25	8 × 22 × 4	14	**EXC20BP**
EXCAV26	7,7	M10-1,5	10 × 23 × 4	16	**EXC26BP**
EXCAV38	14,5	M18-2,5	19 × 33 × 6	27	**EXC38BP**
EXCAV50	19,8	M24-3	25 × 42 × 6	34	**EXC50BP**

Info

Expandable Cavities simplify tooling design to effectively mold undercuts such as threads, dimples, and protrusions on parts such as snap O-ring caps, plumbing supplies, industrial flanges and valves, electrical fixtures, and much more.
The patented Expandable Cavity design eliminates the engineering, maintenance, and machining required for slide action mechanisms which results in smaller molds or higher mold cavitation.

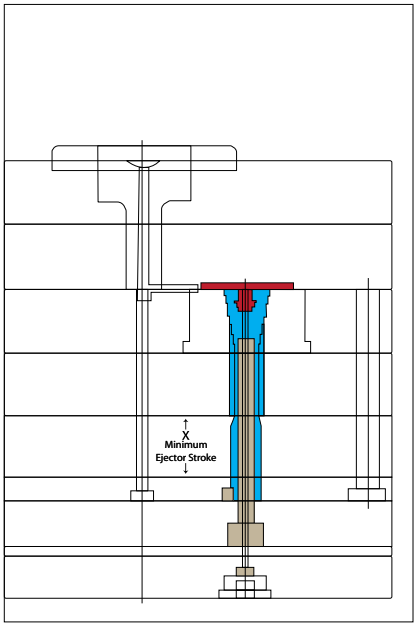

Mold Closed

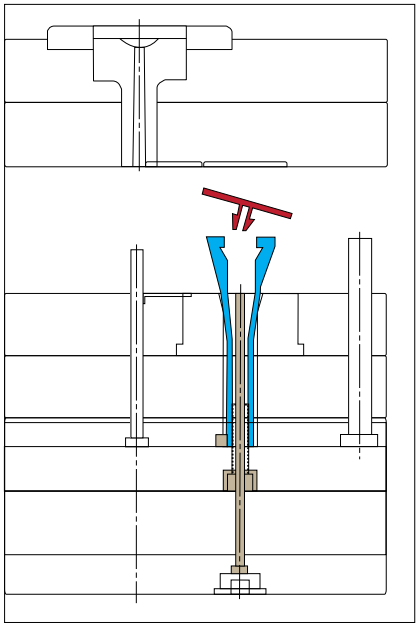

Mold Open

Technical Information:
Available in four standard sizes to satisfy a wide range of applications.
The Expandable Cavity expands along a conical shape; 10° per side.
Manufactured from A-2 (~1.2363) tool steel (54-57 HRC) for repeatable expansion. For optimal performance, the Expandable Cavity should ride against a hardened insert.
Expandable Cavities are capable of operating without lubrication. However, treating the Expandable Cavity with an additional coating for wear reduction or corrosion resistance is beneficial.
Expandable Cavities can be ordered with molding detail for a 'mold ready' component.

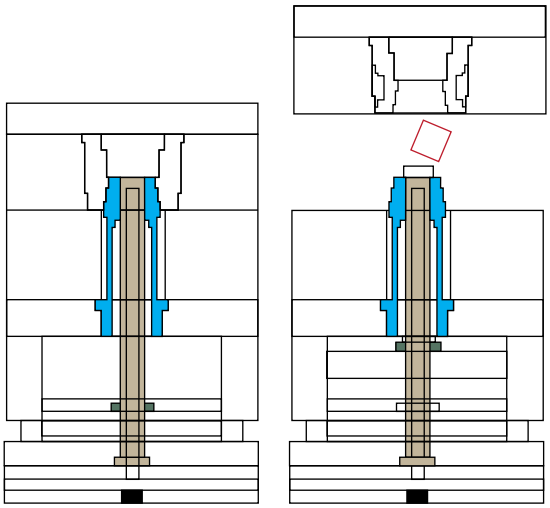

Cost savings that maximize value:
Simplified mold design
Eliminates traditional slides; allows molding of details once considered "un-moldable"
Uses existing ejector system for actuation; either mold open or ejection stages the Expandable Cavity forward to release the molded undercut
Reduces maintenance costs
Maximizes cavities per mold
Compact; often enabling more cavities in the mold and/or the use of a smaller mold base
Improved mold balance and flexibility in design
Easily accommodates family molds
Reduces cycle time from staging plates forward during mold open
Can be ordered with the required molding detail, eliminating the risk of machining errors or scrapping the unit, saving time and money
Detail is machined in a one-piece unit eliminating the risk of error or mismatch that can occur with mating slides
Manufactured with certified alloy steel (A-2) (~1.2363) and proprietary processing techniques to ensure long life and dependable performance

Frequently Asked Questions

Q. What are the material types from which an Expandable Cavity can be made, and how much hardness and wear resistance is expected?
A. A-2 (~1.2363) tool steel is the default material. It has a hardness of 54-57 HRC. Wear resistance is very good.
Q. Are surface treatments recommended?
A. It depends on the application. The DME engineering staff will review potential options, if needed.
Q. Are there any temperature limitations?
A. Maximum temperature is 260°C.
Q. What is the expected life cycle of an Expandable Cavity and what maintenance is required?
A. Customers have run millions of cycles. The biggest factor for performance is not the flexing aspect or fatigue as much as cleanliness of the tool over the life of the mold.

MILACRON®

DOVETAIL CORE ADVANTAGES

- Positive mechanically actuated Collapsible Core
- Collapse amount: 5% to 7% per side
- Eliminates costly Rack and Gear Systems
- Enables faster mold cycle times
- Patented Quick Lock helps cut service time
- Built-in center cooling channel
- Standard and custom sizes available

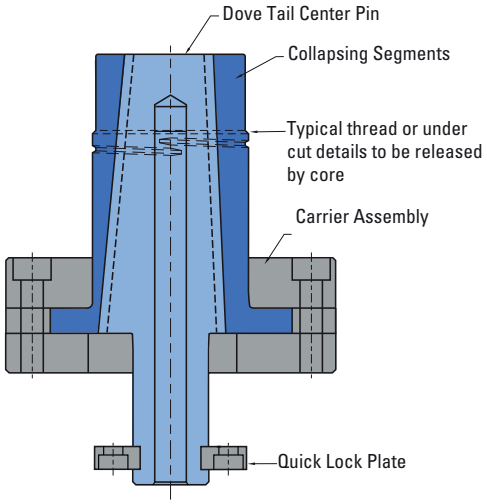

Simplified Mold Design Maximizes Cost Savings

The Collapsible Core DT Series provides a more compact and simplified solution to molding challenging internal undercut features such as o-ring grooves, slots and snap-fit designs. Available in four standard sizes and in customized sizes, the DT Collapsible Core Series eliminates the need for unscrewing mechanisms.

Dove Tail Collapsible Cores Enable Application Design Flexibility

- All standard DT Series Collapsible Cores offer 360 degree molding of threads or other undercut features
- Molded parts are not required to be closed at one end; they may be partially or completely open
- DME offers customized DT Cores with pre-machined part detail
- A variety of coatings and treatments are available
- For an engineering review, email your part drawing or application to dmeeu_specialprojects@milacron.com

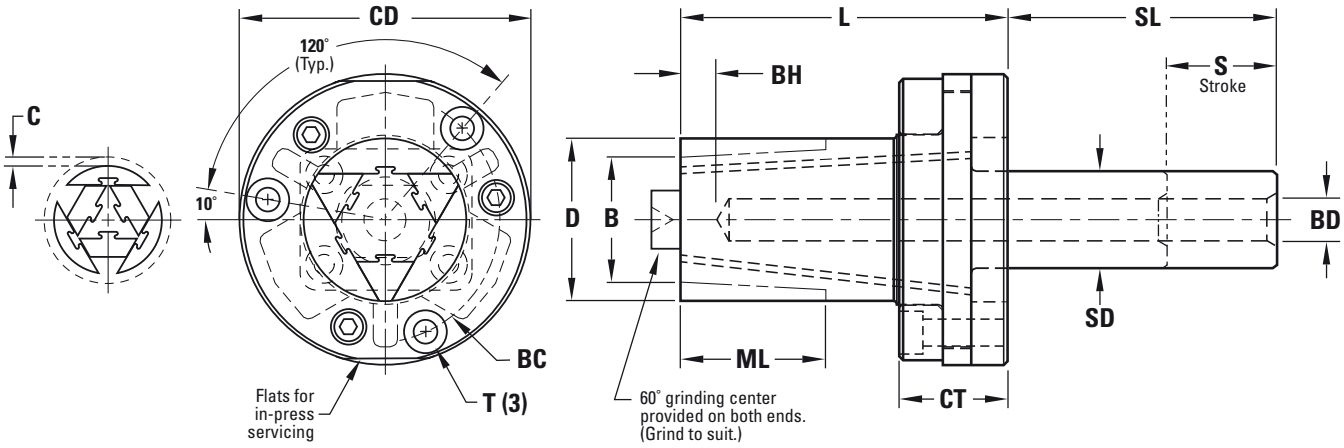

All dimensions and tolerances are in milimeters.

REF	D Maximum Outer Diameter	B Minimum Inner Diameter +3°/Side	ML Maximum Molding Length	C Maximum Collapse	CD Carrier Diameter	CT Carrier Assembly Thickness ± 0,05	L Core Length +0,1 -0,0	SL Shaft Length	SD Shaft Diameter +0,00 -0,02	BD Cooling Hole Diameter	BH Distance to Cooling Hole	BC Mounting Screw Bolt Circle	T Mounting Screws	S Maximum Collapse Stroke
DT18	21	17	22	1,1	53	21	60	60	16	6	6	40	M5 x 25	34
DT28	33	25	28	1,6	60	22	67	60	20	8	8	47	M5 x 25	38
DT38	42	33	43	2,1	76	28	85	60	25	10	10	60	M6 x 35	54
DT48	54	42	50	2,4	98	37	104	70	30	12	12	78	M8 x 40	62

Info EXP

Expandable Cores

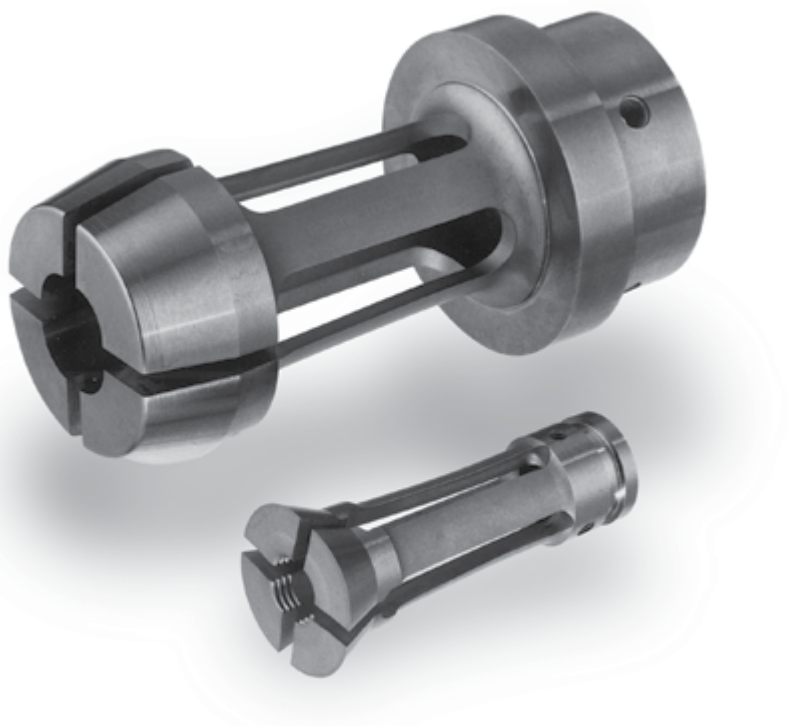

Broad Range of Benefits
Simple Design
The revolutionary design and engineering of the Expandable Core saves steps and solves problems that have complicated plastics molding for years. In addition to simplifying new tooling design, it can be retrofit to existing molds.

More Reliable
Complete reliability of the Expandable Core is assured, not only by the simplicity of the design, but also by the use of superior materials and proven proprietary processing techniques. It has been field tested over several million cycles.

More Compact
Using the DME Expandable Core allows you to design more cavities in each mold.

Speeds Molding Process
The Expandable Core concept completely eliminates the need for side-action mechanisms and the additional machining steps they require.

Speeds Development
The Expandable Core concept simplifies the engineering required to design and manufacture a new Core.

Lowers Development & Processing Costs
The Expandable Core saves money at every step from initial tooling to processing to maintenance. Items such as complex design details, core slides and required mechanical components.

EXP

Typical application

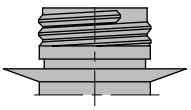

Bottle tops

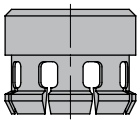

Snap fit covers/lenses

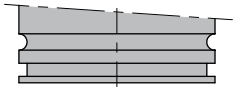

O-ring grooves

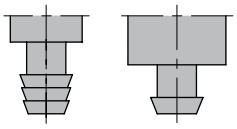

Barb connections

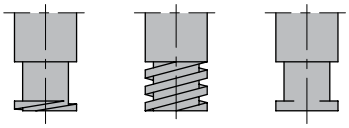

Luer connections

REF
EXP ****

Typical mold layouts

Go from this mold layout
with conventional slide mold

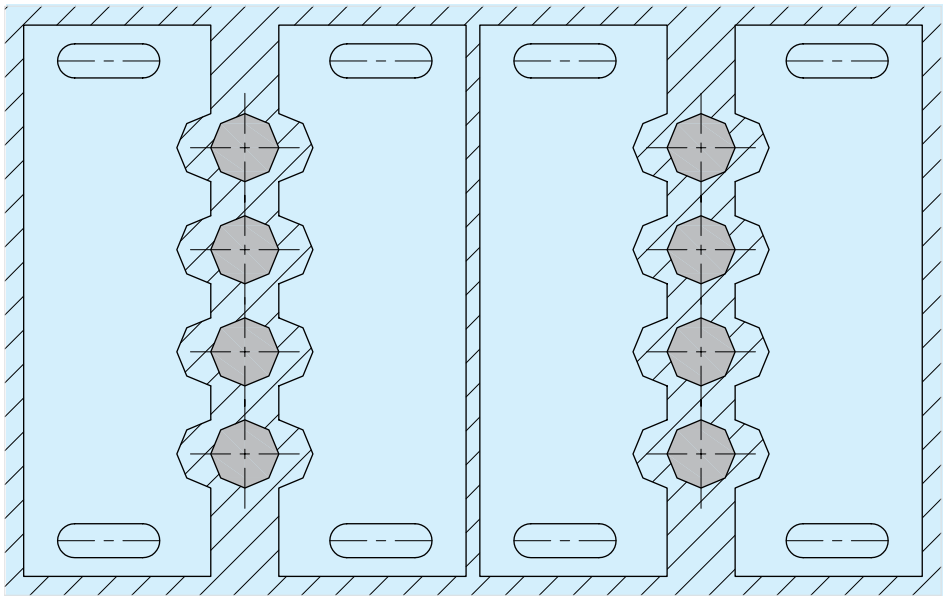

to this reduced mold size
with expandable cavity

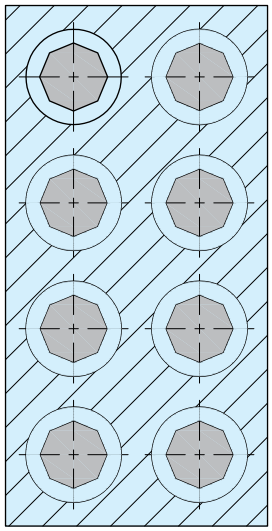

Radial mold layout with expandable cavity

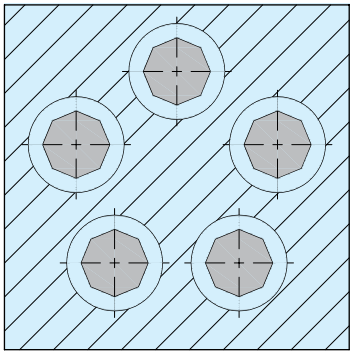

Nest mold layout with expandable cavity

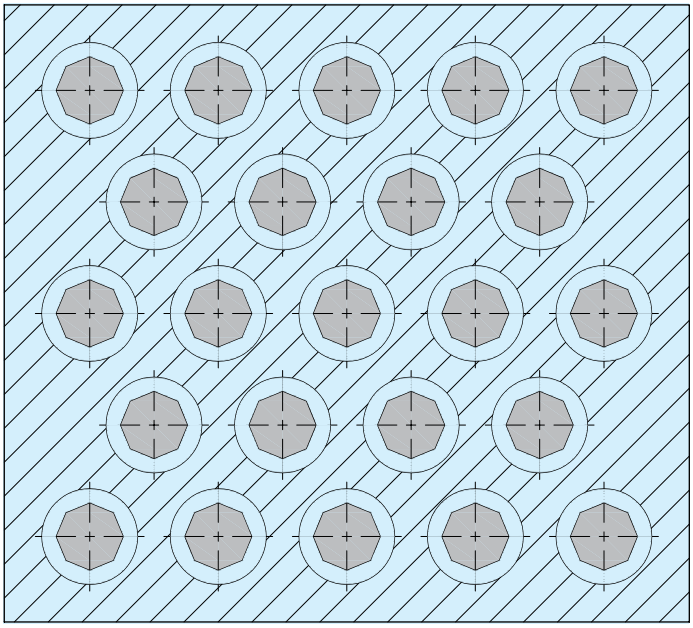

MILACRON®

EXP

Info EXP

Expandable Core
The Expandable Core is typically made of 1.2363 tool steel, hardened to 54-58 HRC. The typical tool has 4 segments.

Striker Insert
The Striker Insert is made from different types of tool steel. It is hardened to 32-45 HRC scale, depending on the application. The Striker Insert has a lower hardness than the Expandable Core to ensure the eventual wear will occur on the Striker Insert. Depending on the part configuration, the Striker Insert can be used in the "A" or "B" side of the mold.(See figure 1 and 2 for details). The Striker Insert must be closely fit to the Expandable Core to ensure that in the mold closed position the segments are completely sealed against one another. The tolerance on this fit must be held to ± 0.013 mm. This will ensure flash free molding. When the mold is closed, the exterior of the Expandable Core must be supported by the Striker Insert at least 7/8 of the molded length plus the shut-off, to ensure no flash conditions. Allow for 5 mm of shut-off length below the molding length, any more is excessive.

Interchangeable Center Pin
The solid center mandrel is the most common type of center pin. It may have an inner cooling channel depending on its size. The center pin provides an internal shut-off with the Expandable Core.

Typical application with"A" side striker insert

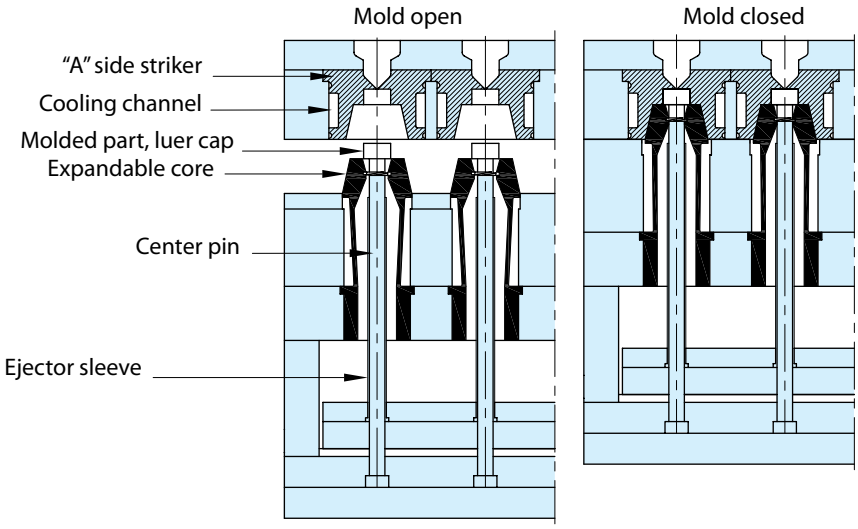

Typical application with "B" side striker insert

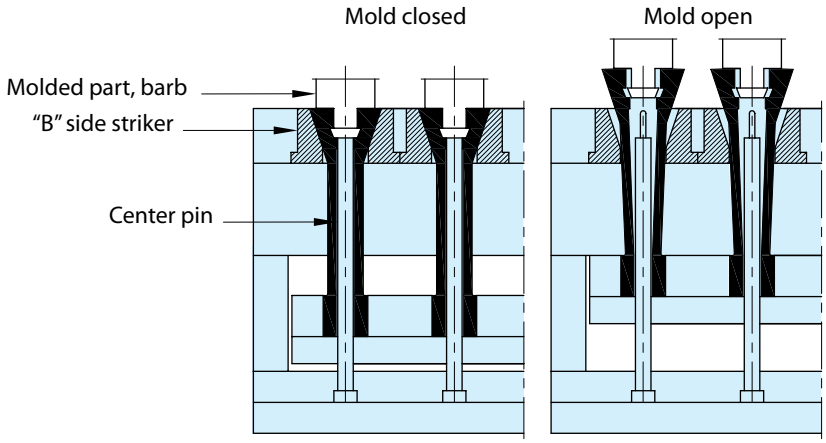

With "A" striker insert and expansion limiter sleeve

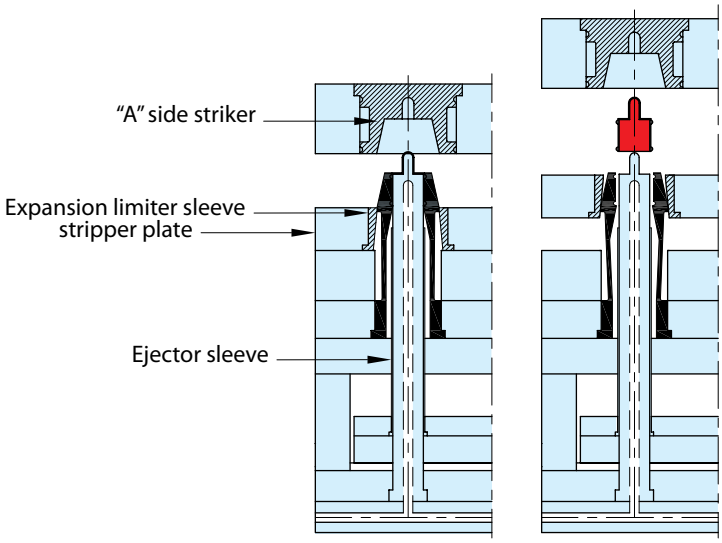

Expandable Core and Striker Insert Design

EXP

The Expandable Core can mold a full 360° around. The most common configuration is 4 segments that mold 90° apiece. The Expandable Core can also be designed as asymmetrical, such as two segments that mold 90° apiece and 3 segments that mold 60° apiece. The amount of expansion varies according to the part requirements, and clearances needed.
The critical expansion needed to release the undercut is not the radial difference between major diameter (D) and minor diameter (d).
Most Expandable Cores are usually ground or EDM'd. It is important when grinding to flood tool with suitable coolant for hardened tool steels. (Dress wheel frequently). The wheel must be of a soft grade. When grinding make sure the Expandable Core completely closed in a true circle by using the grinding ring supplied, as shown here. After all finish grinding, polishing and EDM'ing work, be sure to demagnetize the Expandable Core to prevent adhesion of any metal particles that might find their way into the Core during molding.

Note : **DME** does not provide the part configuration detailing or machining.

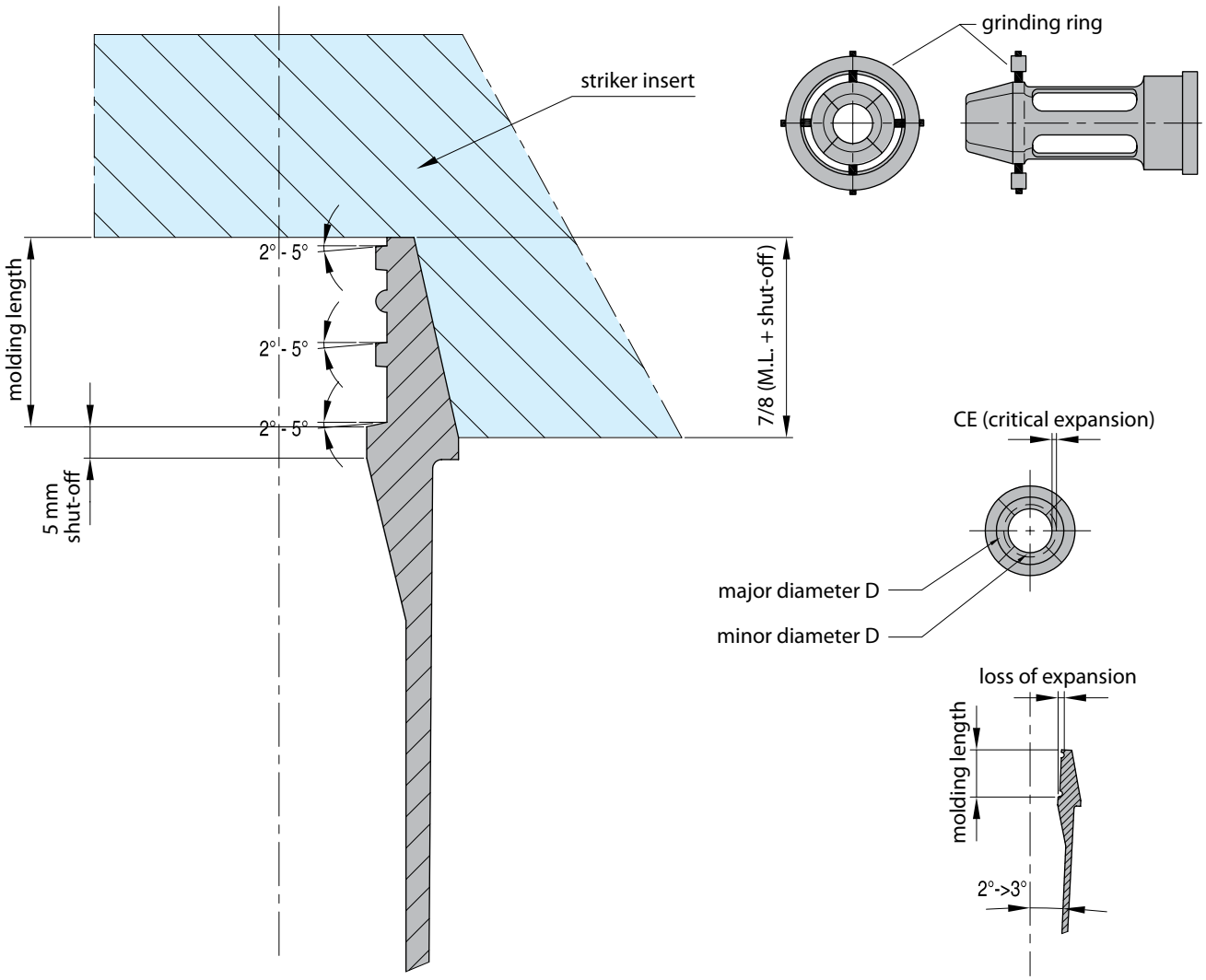

Info

Hydraulic unscrewing device

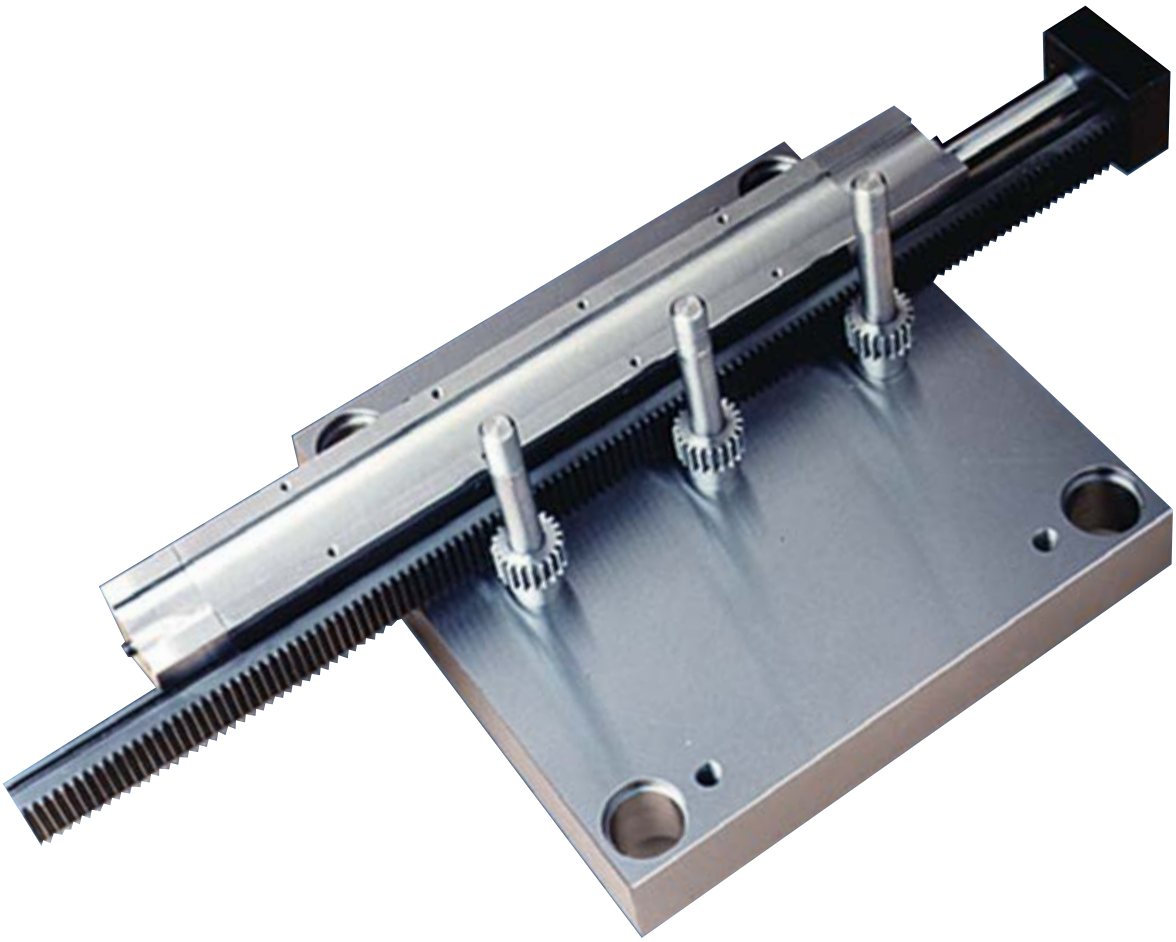

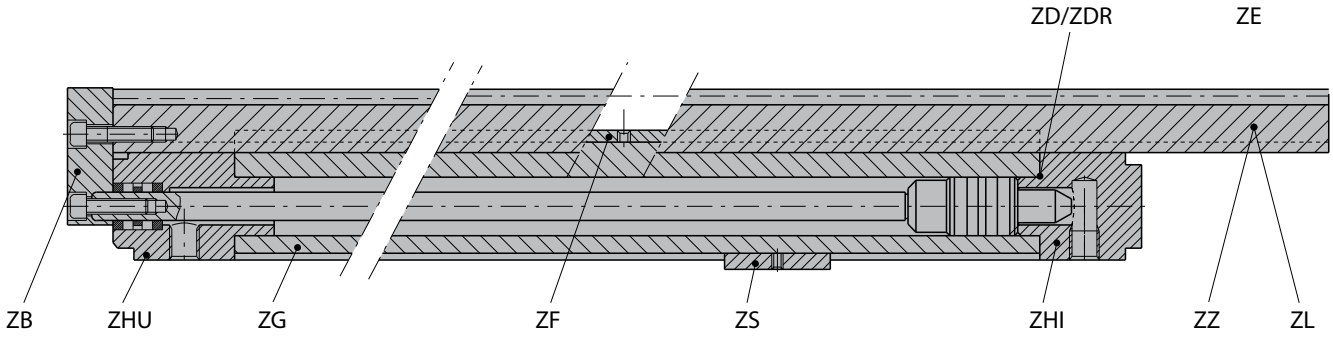

REF	Includes		
	Base construction	End caps-out	End Caps-in
ZG 25 300	ZG 25 300	ZHU 25	ZHI 25
ZG 25 400	ZG 25 400	ZHU 25	ZHI 25
ZG 25 500	ZG 25 500	ZHU 25	ZHI 25
ZG 40 300	ZG 40 300	ZHU 40	ZHI 40
ZG 40 400	ZG 40 400	ZHU 40	ZHI 40
ZG 40 500	ZG 40 500	ZHU 40	ZHI 40
ZG 63 400	ZG 63 400	ZHU 63	ZHI 63
ZG 63 500	ZG 63 500	ZHU 63	ZHI 63

Base construction

MaxT = 80°C - Max p = 150 bar

ZG

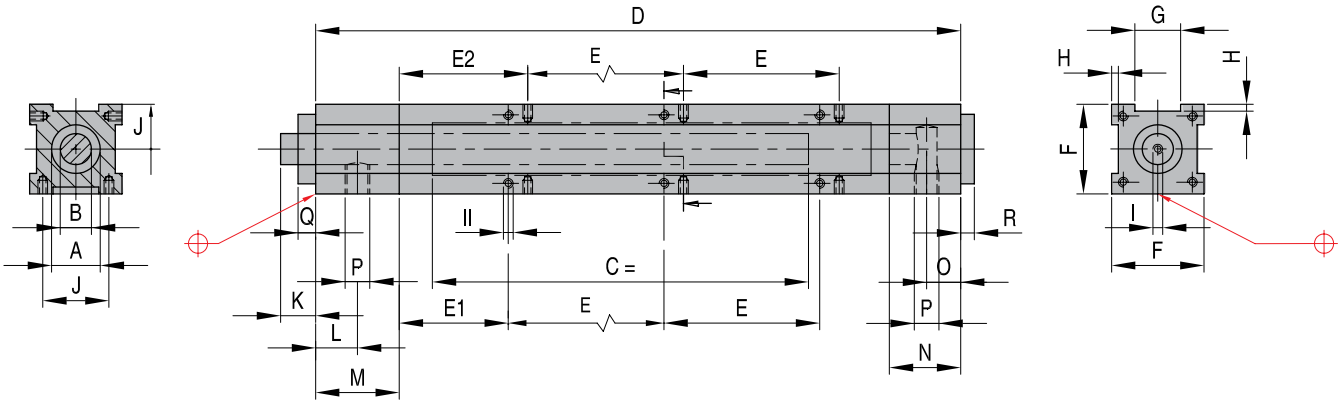

REF	A	B	C	D	E	E1	E2	F	G	H	J	K	L	M	N	O	P	Q	R	I	II
ZG 25 300	ø 25	ø 16	300	424	3x80	56	66	46	20	3,5	34	18	21,5	43	29	11	R 1/4"	9	6	M8x20	SM5x10
ZG 25 400			400	524	3x80	106	116														
ZG 25 500			500	624	5x80	76	86														
ZG 40 300	ø 40	ø 22	300	432	3x80	56	66	56	30	3,5	44	22	34	53	27	13	R 1/2"	9	8	M10x30	SM5x10
ZG 40 400			400	532	3x80	106	116														
ZG 40 500			500	632	5x80	76	86														
ZG 63 400	ø 63	ø 36	400	556	3x80	114	124	96	50	8	70	38	25	52	35	16	R 3/4"	22	12	M16x40	SM8x16
ZG 63 500			500	656	5x80	84	94														

Racks

Mat.: 1.6580 nitrided 60 HRc

ZZ

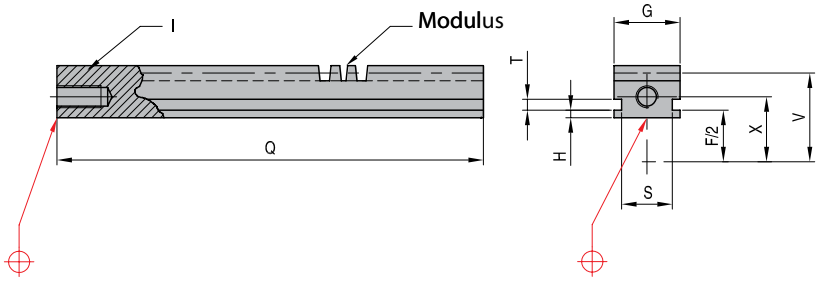

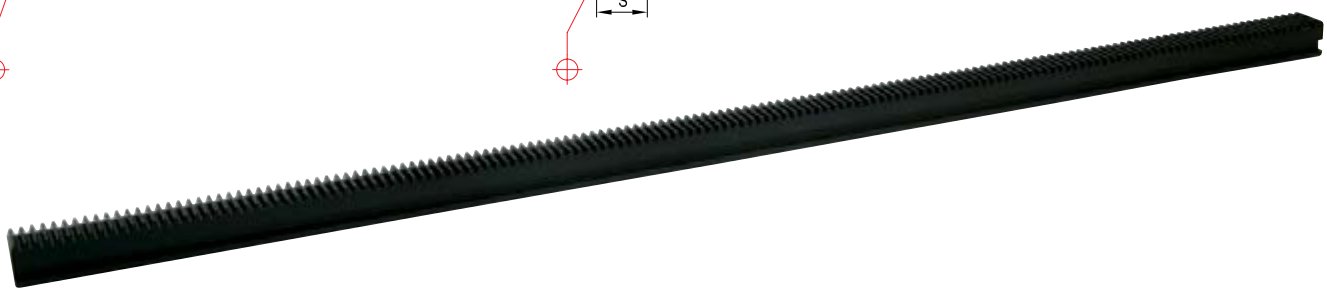

REF	A	F/2	G	H	Q	Modulus	S	T	V	X	I
ZZ 25-600/1,0	Ø 25	23	20	3,4	600	1,00	13	5	36,2	27	M8x20
ZZ 25-800/1,0	Ø 25	23	20	3,4	800	1,00	13	5	36,2	27	M8x20
ZZ 25-600/1,25	Ø 25	23	20	3,4	600	1,25	13	5	36,2	27	M8x20
ZZ 25-800/1,25	Ø 25	23	20	3,4	800	1,25	13	5	36,2	27	M8x20
ZZ 40-600/1,5	Ø 40	28	30	3,4	600	1,5	23	5	43,0	34	M10x30
ZZ 40-800/1,5	Ø 40	28	30	3,4	800	1,5	23	5	43,0	34	M10x30
ZZ 63-800/2,0	Ø 63	48	50	7,9	800	2,00	40	7	68,0	55	M12x40
ZZ 63-900/2,0	Ø 63	48	50	7,9	900	2,00	40	7	68,0	55	M12x40

ZL

Gibs

Mat.: 1.7225 ~30 HRc

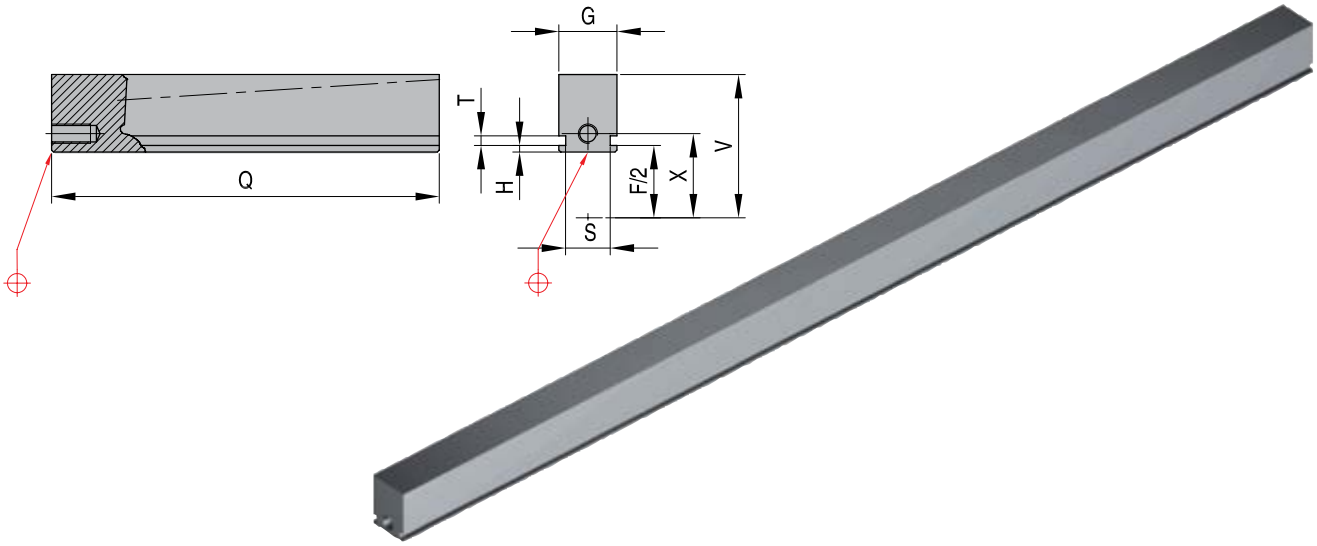

REF	A	F/2	G	H	Q	S	T	V	X	I
ZL 25-800	Ø 25	23	20	3,35	800	13	5	49,5	27	M8x20
ZL 40-800	Ø 40	28	30	3,50	800	23	5	64,5	34	M10x30
ZL 63-900	Ø 63	48	50	8,00	900	40	7	100,0	55	M12x40

ZB

Flanges

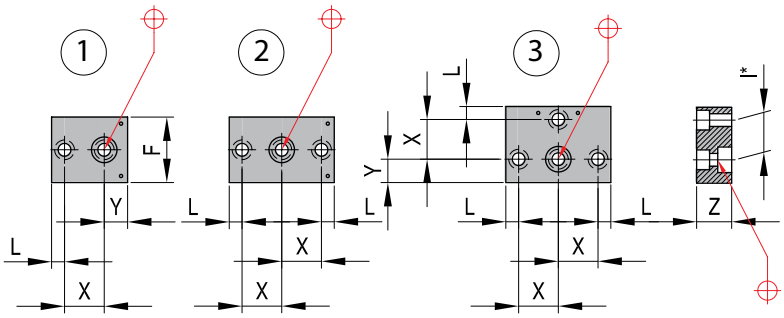

* I is the thread dimension

REF	A	X	Y	F	Z	L	I: for
ZB 25-1	Ø 25	27	12,5	46	20	10,5	2xM8x20
ZB 25-2							3xM8x20
ZB 25-3							4xM8x20
ZB 40-1	Ø 40	34	20,0	56	30	11,0	2xM10x30
ZB 40-2							3xM10x30
ZB 40-3							4xM10x30
ZB 63-1	Ø 63	55	30,0	96	40	15,0	1xM12x40+1 M16x40
ZB 63-2							2xM12x40+1 M16x40
ZB 63-3							3xM12x40+1 M16x40

Guideways

Order per 2 pieces

ZF

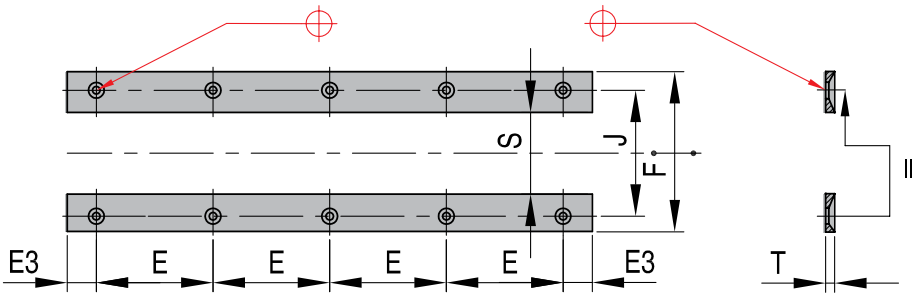

REF	A	C	E	E3	F	J	S	T	II
ZF 25-300	Ø 25	300	3x80	46	46	34	14	4	SM 5x10
ZF 25-400	Ø 25	400	3x80	96	46	34	14	4	SM 5x10
ZF 25-500	Ø 25	500	5x80	66	46	34	14	4	SM 5x10
ZF 40-300	Ø 40	300	3x80	46	56	44	24	4	SM 5x10
ZF 40-400	Ø 40	400	3x80	96	56	44	24	4	SM 5x10
ZF 40-500	Ø 40	500	5x80	66	56	44	24	4	SM 5x10
ZF 63-400	Ø 63	400	3x80	104	96	70	42	6	SM 8x16
ZF 63-500	Ø 63	500	5x80	74	96	70	42	6	SM 8x16

Locating plates

ZS

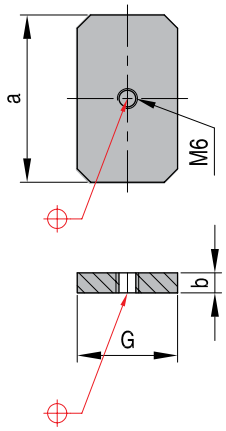

REF	A	G	a	b
ZS 25	Ø 25	20	40	6
ZS 40	Ø 40	30	50	6
ZS 63	Ø 63	50	80	15

ZE

Limit switches

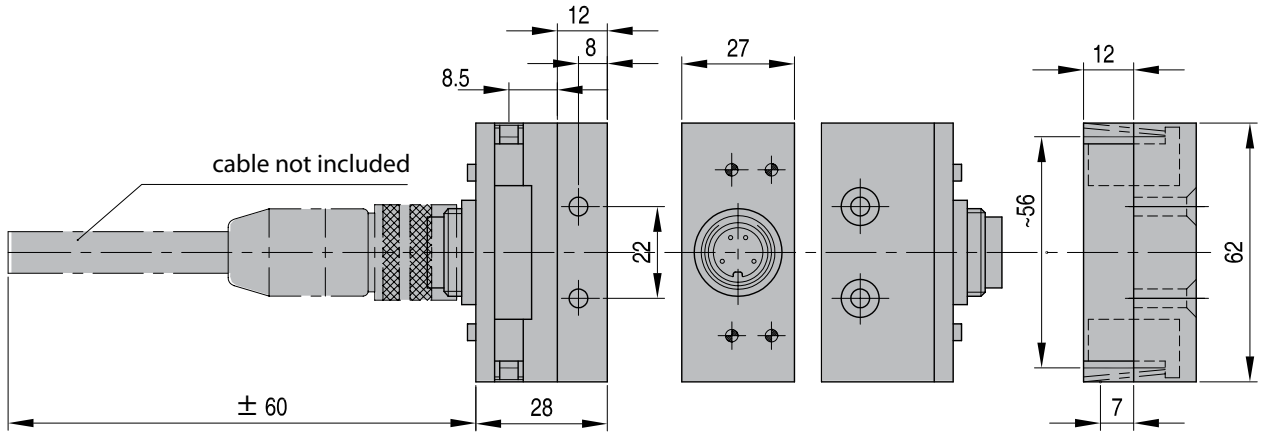

Installation details for Limit Switch ZE-25/40

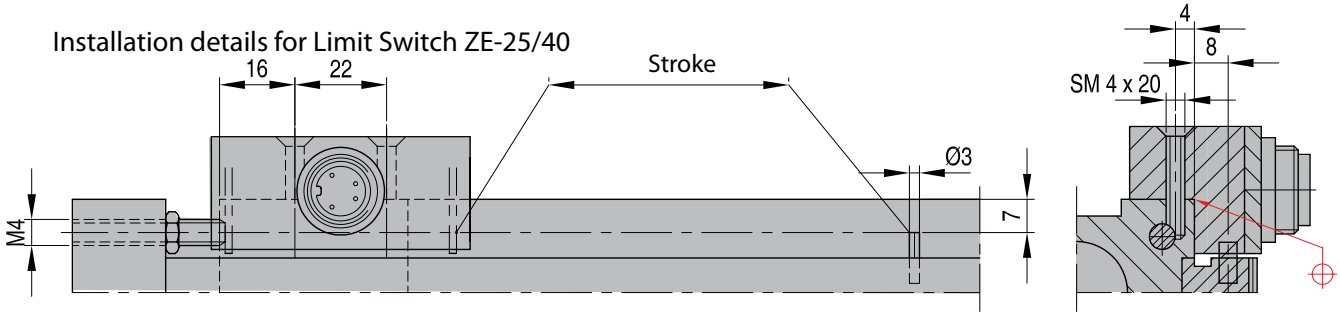

For gear information please contact ***D-M-E***

REF	Includes			
ZE 25/40	(2x) **SM4x20**	(1x) **DP3x16**	(1x) **GS4x20**	(1x) **M4 DIN 934**

ZHI

Spare part: end cap - in

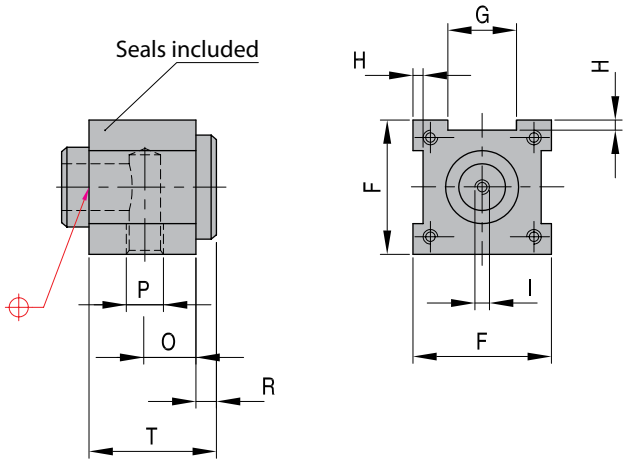

REF	O	R	P	T
ZHI 25	11	6	R 1/4"	35
ZHI 40	13	8	R 1/2"	35
ZHI 63	16	12	R 3/4"	47

Spare part: end cap - out

ZHU

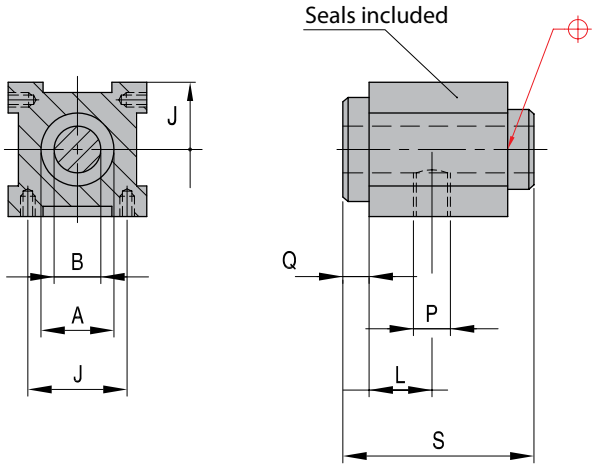

REF	L	Q	P	S
ZHU 25	21,5	9	R 1/4"	52
ZHU 40	34	9	R 1/2"	62
ZHU 63	25	22	R 3/4"	74

Spare part: rod & pist

ZTP

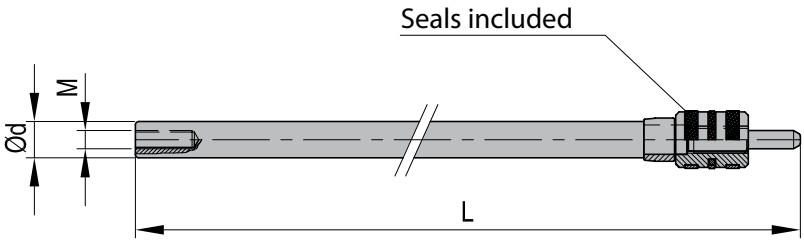

REF	Ø d	M	L
ZTP 2530 ZG 25300	16	8	426
ZTP 2540 ZG 25400	16	8	526
ZTP 2550 ZG 25500	16	8	626
ZTP 4030 ZG 40300	22	10	442
ZTP 4040 ZG 40400	22	10	542
ZTP 4050 ZG 40500	22	10	642
ZTP 6340 ZG 63400	36	16	575
ZTP 6350 ZG 63500	36	16	675

11/05/2007

ZD

Spare part: seals (kit)

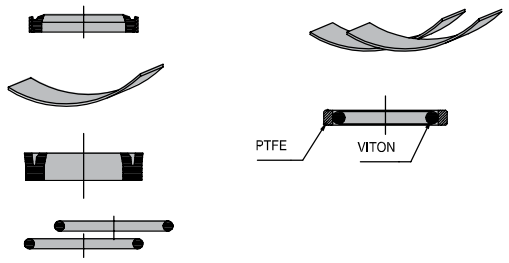

REF
ZD 25
ZD 40
ZD 63

ZDR

Spare part: seals (kit) + mounting tools

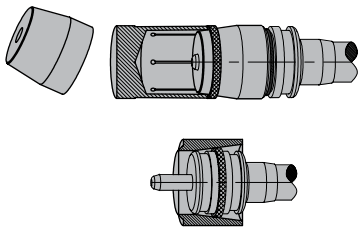

REF
ZDR 0025
ZDR 0040
ZDR 0063

Info

Calculation Example

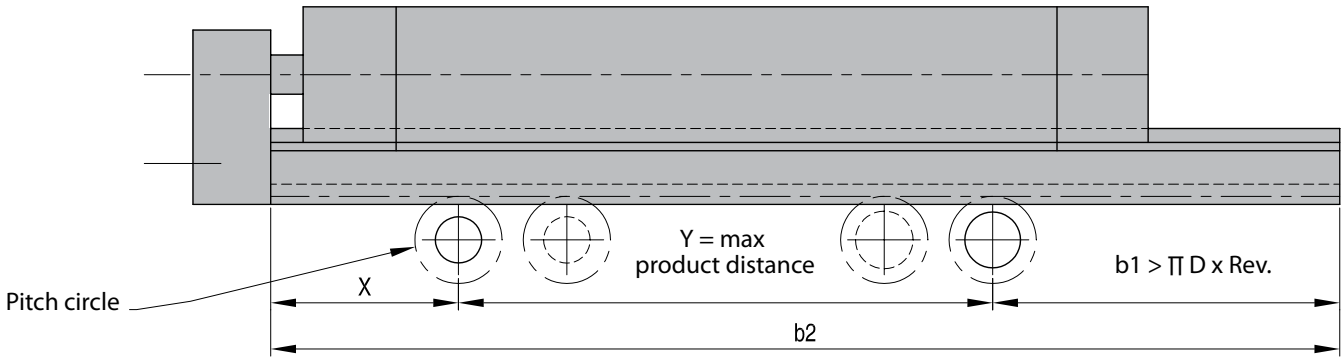

A. Stroke
a. Required revolutions (thread core) = thread height/thread lead + safety (min 0,5 t) = 12 mm/3 mm + 0,5 rev. = 4,5 rev.
b. 1. Required stroke (mm) = pitch circle x π x rev. = 30 mm x 3,14 x 4,5 rev. = 424 mm If required stroke is too long, a cog wheel transmission gear should be used 2. Length of rack b2 = X +Y + b1
c. Stripper stroke (mm) = cylinder stroke - required rack stroke = 500 mm - 424 mm = 76 mm

Calculation Example

Info

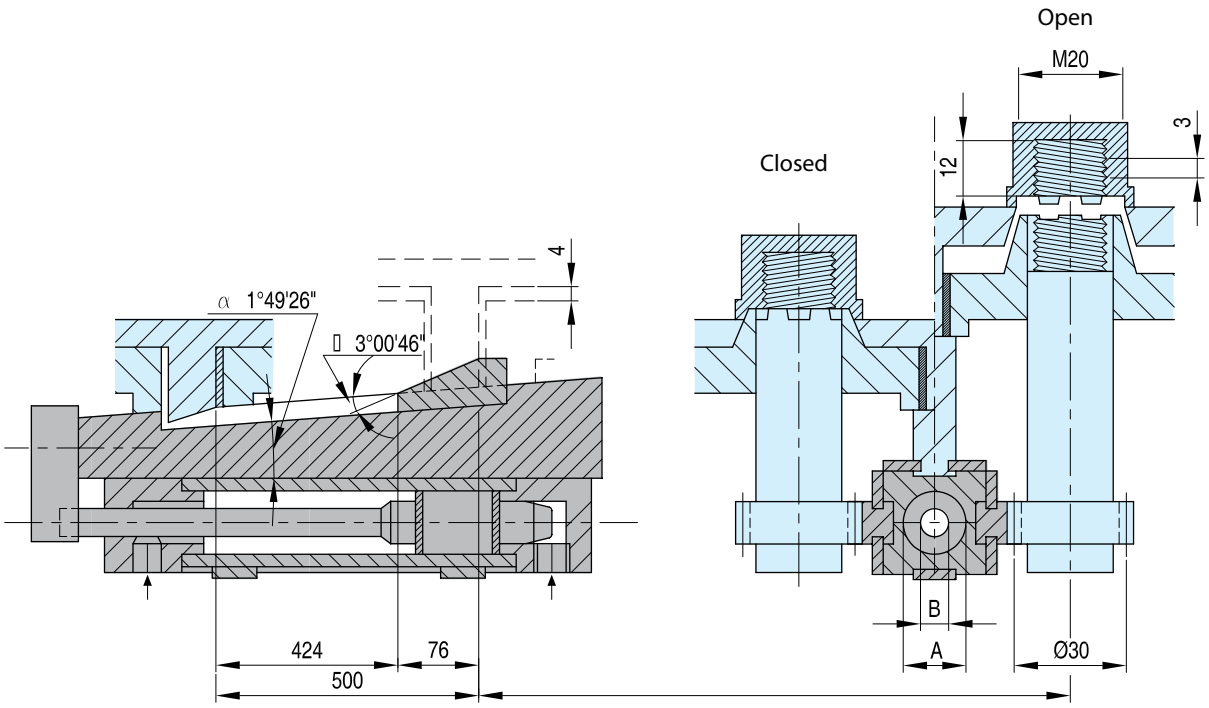

B. Control cam calculation
d. Moving cam (α) tan α = lead/dia. pitch circle x π = 3 mm/30 mm x 3,14 = 0,031847; α = 1° 49′ 26″
α = 1°49′26″
e. Stripper cam (ß) tan ß = Stripper height/Stripper stroke = 4 mm/76 mm = 0,0526315; ß = 3°00′46″

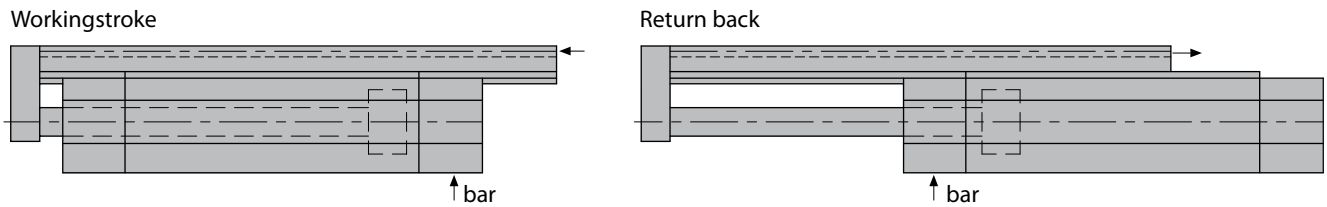

C. Unscrewing force
These figures should only be used as a guideline as many other factors will affect the calculation. (Material, variation of dimensions, material shrinkage, core surface area, temperature, lubricant, etc...)
f. Residual pressure (bar) 1/100 of max. injection pressure = 1000 bar/100 ≈ 10 bar ≈ 1 N/mm²
g. Effective core surface area (mm²) = thread dia. x π x thread height x 2* = 20 mm x 3,14 x 12 mm x 2 = 1507 mm²
* - 2 x height for developped surface (^^^^) - frontal area is neglected
h. Unscrewing torque (Nmm) = Holding pressure x surface x thread radius = 1 N/mm² x 1507 mm² x 10 mm = 15070 Nmm
i. Unscrewing force rack (kN) = unscrewing torque/radius pitch circle x number of cores = 15070 Nmm/15 mm x 4 = 4019 N = 4,02 kN
k. Hydraulic force (kN) = Unscrewing force x 1,5 = 4,02 kN x 1,5 = 6,03 kN (50 % safety, hence x 1,5)

Installation Instructions

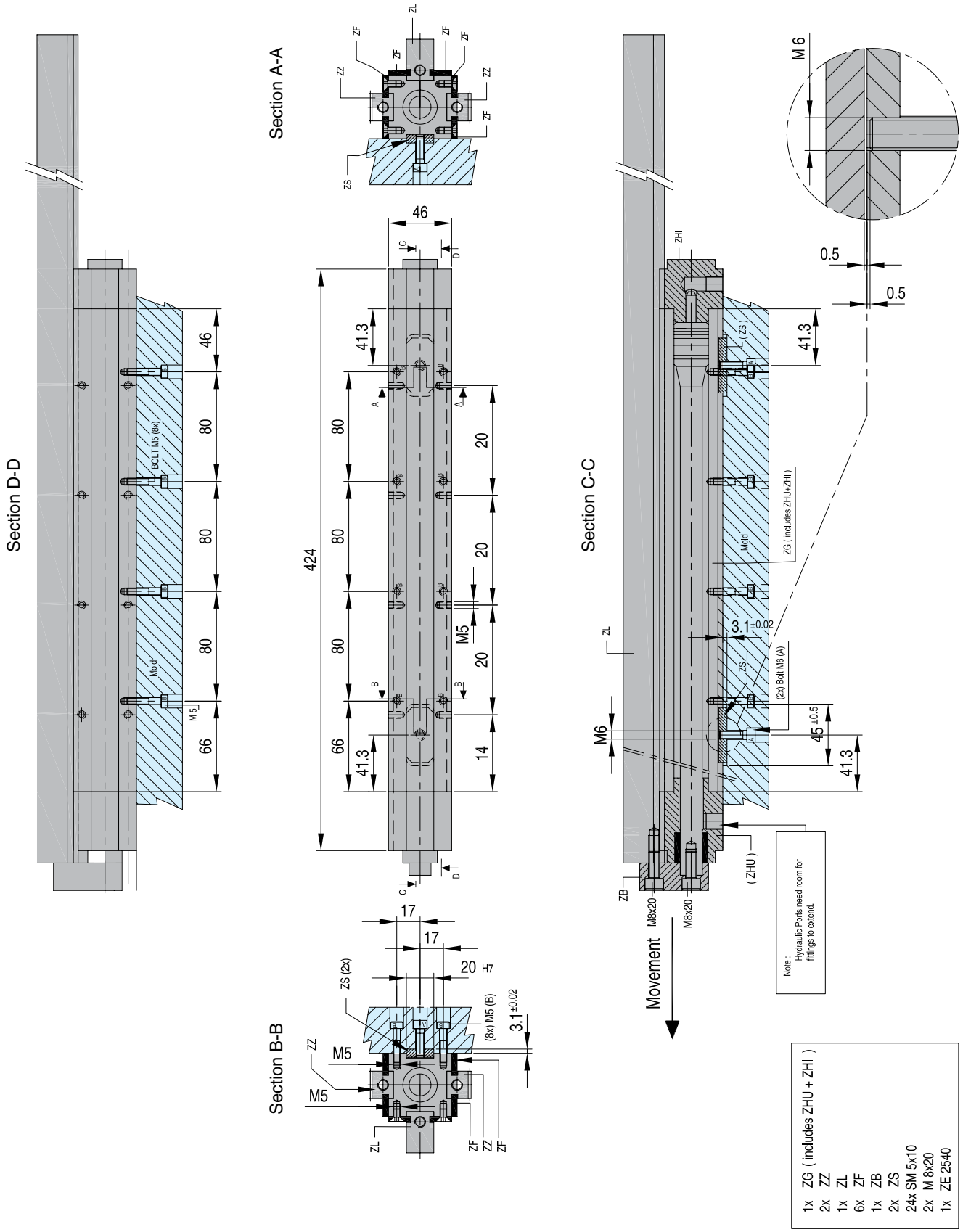

Application A
Without guiding thread with cam

Application B
With guiding thread

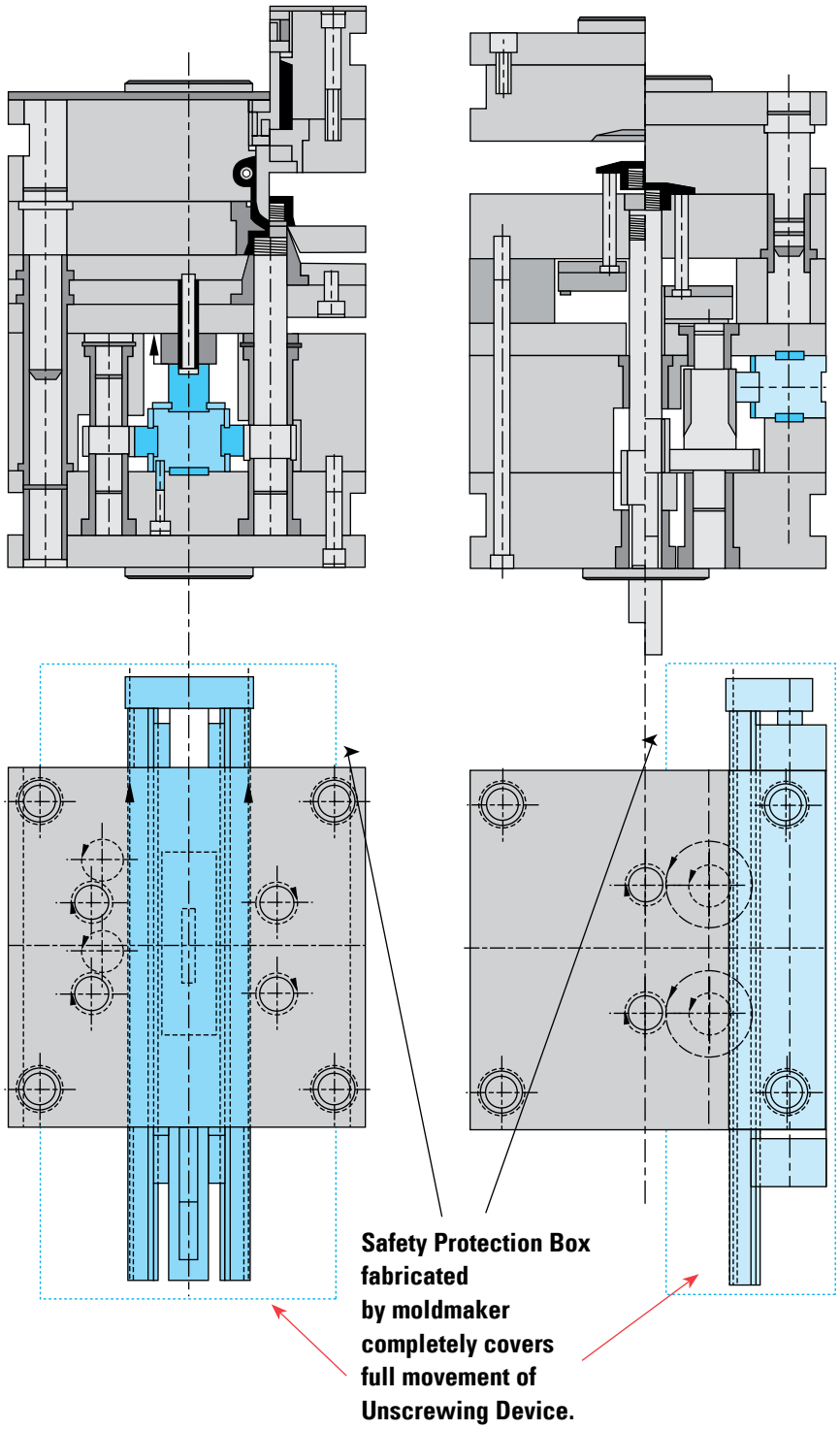

Applications

Application C
With guiding thread

Application D
Long guiding cores

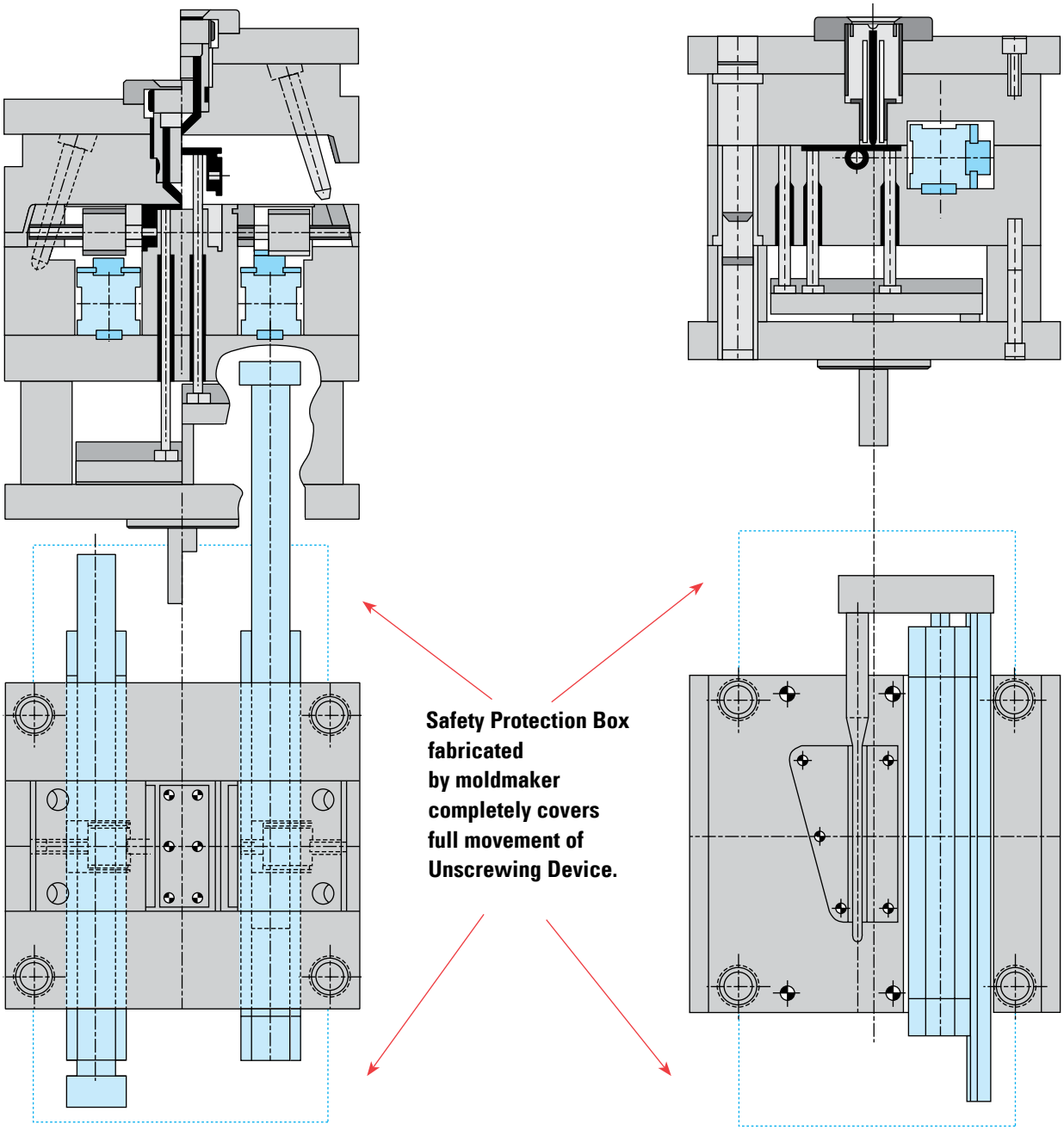

Safety Considerations:
Moldmaker must fabricate boxes over the rack areas which move to protect against injury to personnel. Moldmaker must also use safety interlocks to prevent movement of unscrewing device if these protection boxes are removed for any reason. Also, sheet metal should be used to cover areas where the gears are, to prevent damage from loose debris falling between the gears and racks.

MILACRON®

Other Technical Solutions

DME

Every step of the way

AR

Quick action ejector return couplings for presses with hydraulic ejection

Quick return coupling
(incl. connecting plug)

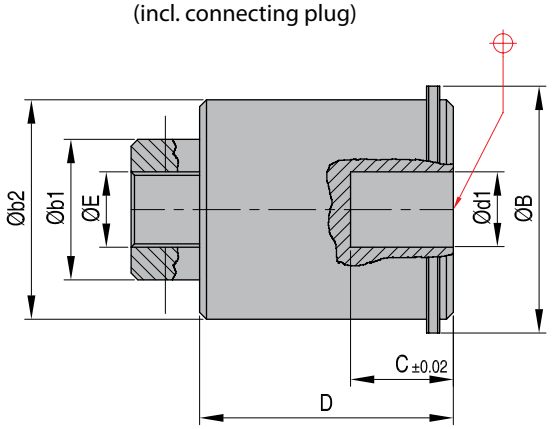

Connecting plug

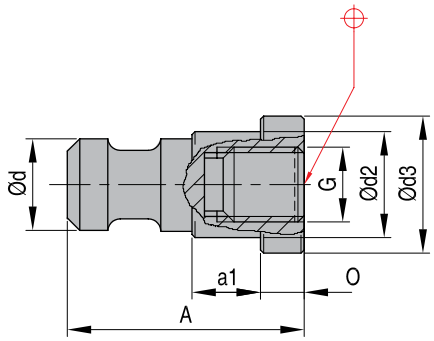

REF	Description	A	B	b1	b2	d1	C	D	E	M	N	O
AR 01	coupling + plug	38	43	24	38	15	18	43,5	M16	23	18	7
AR 02	coupling + plug	43	73	42	67	30	24	75,5	M20	42	32	8
AR 01 P	plug	38								23	18	7
AR 02 P	plug	43								42	32	8

Installation

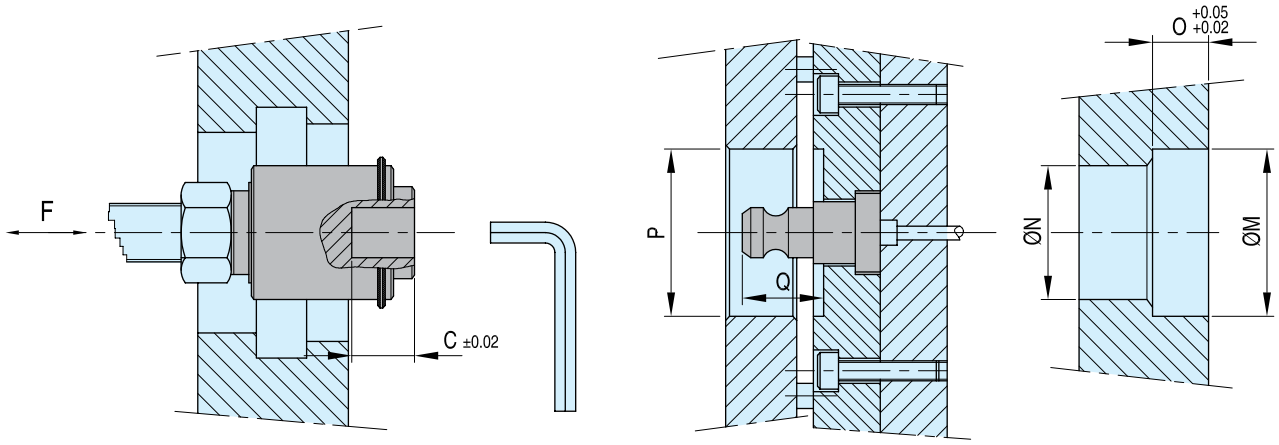

REF	Pmin.	Qmin.	a1	d	d2	d3	G	F	SW
AR 01	48	C+1	11	14,7	17,4	22,5	M12	40 kN	19
AR 02	80	C+1	14	29,5	29,4	40,0	M16	140 kN	32
AR 01 P			11	14,7	17,4	22,5	M12		
AR 02 P			14	29,5	29,4	40,0	M16		

Quick action ejector return couplings for presses with hydraulic ejection

Info AR

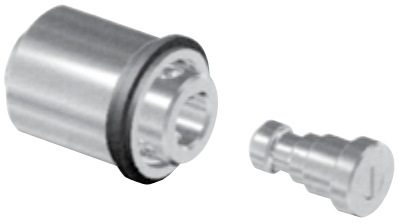

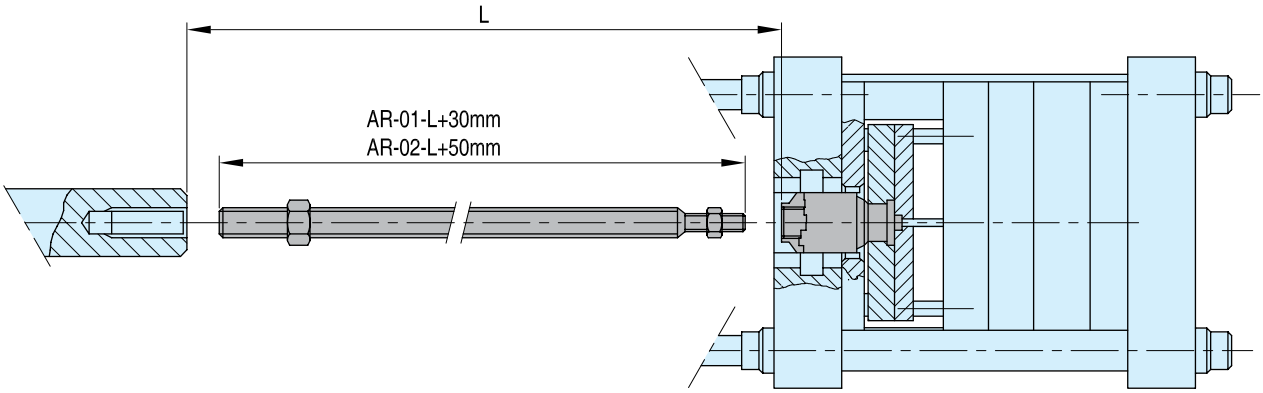

Economical
shortens mold change-over times only one unit required per injection molding machine

Universal
can be put into existing molds to save time and money hydraulic return by means of fixed coupling pulsating ejection possible

Installation
1. Move the ejector plate to the molding position (mold closed).
2. Move also the ejector cylinder rod to the fully retracted position. It is important to check by hand, that the rod is fully pushed back to the fully retracted position before measuring.
3. Measure the distance between the coupling and the ejector cylinder rod.
4. Extend the ejector cylinder rod with an extra knock-out rod of the measured length + 30 mm for AR-01 and 50 mm for AR-02.
5. Move the mold ejector plates to the forward position (mold open).
6. Lock both the extra knock-out rod and at the other end the quick coupling.
7. Move the mold ejector plates back to the mold closed position and make the coupling between ejector plate and ejector cylinder rod. Make sure that the ejector plate and ejector cylinder rod are both in the mold closed position as soon as the coupling is made, if not, adjust.
Do not use with quick mold change systems.

Info Air Valve

Air valves improved for fast running applications

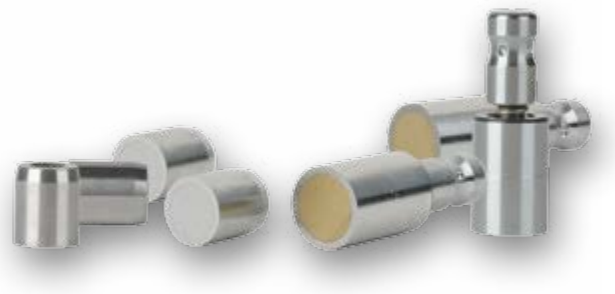

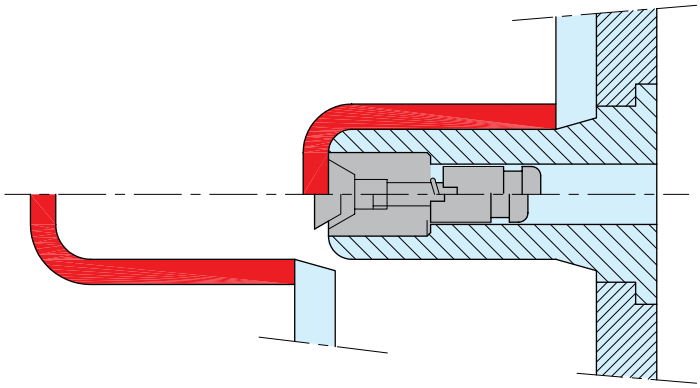

DME's team of experts has re-engineered the "long" type air valves resulting in increased strength and guaranteed reliability. Improvements to the internal design ensure strong, long-lasting function and flash-free shut-off. The same technology and know-how is applied to our new "short" type air valves ensuring high quality despite the economical price.

The "long" type air valves have been popular and successful for many years. they are used to remedy the vacuum problem often encountered when molding deep or thin walled parts (flower pots, buckets, ...). At ejection, a blast of air opens the valve to break the vacuum and facilitate part ejection (see diagram).

DME now offers a range of valves suitable for all applications. Where space is limited the "short" type offers a compact solution. For more demanding applications, the "long" type offers excellent performance. Both types are of the highest quality and have been tested in extreme circumstances of temperature, pressure and cycle time.

VA- i

Vacuum-/ Compressed air-valves "long" type Mat.: 1.4034 - 150°C - 3-10 bar

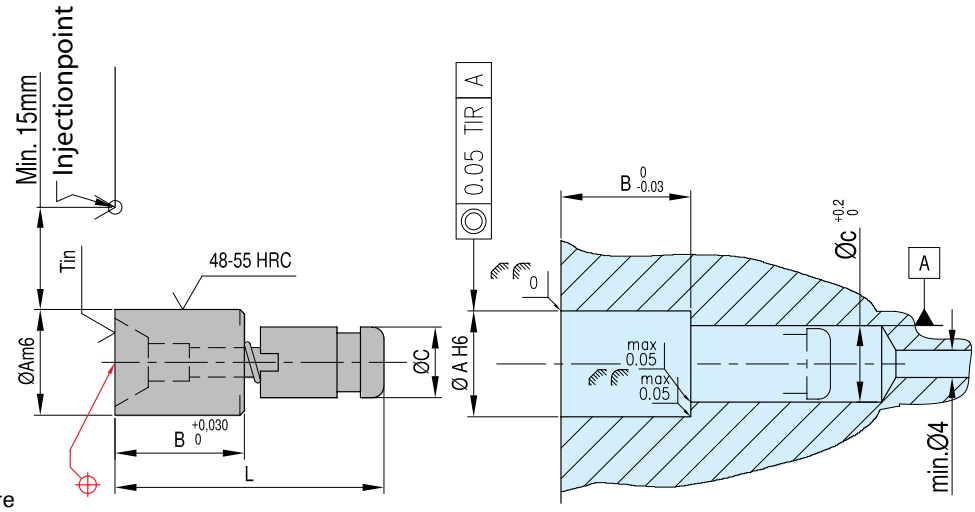

Tested on 2300 bar injection pressure

REF	A	B	C	L	c +0,2 -0
VA-01 i	8	11	6	24,0	6,75
VA-02 i	12	18	8	34,0	9,00
VA-03 i	18	22	12	45,5	14,00

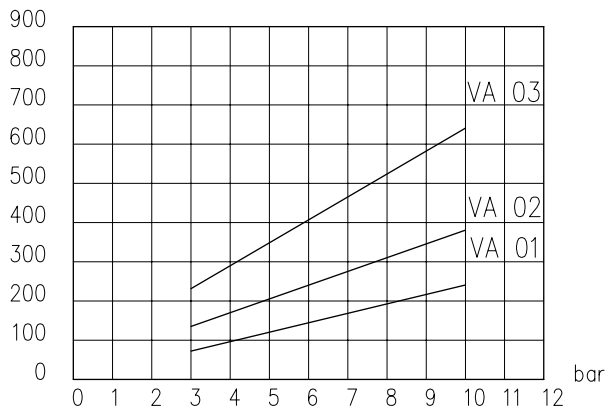

Vacuum-/ Compressed air-valves "short" type Mat.: 1.4034 - 150°C - 3-10 bar

VA

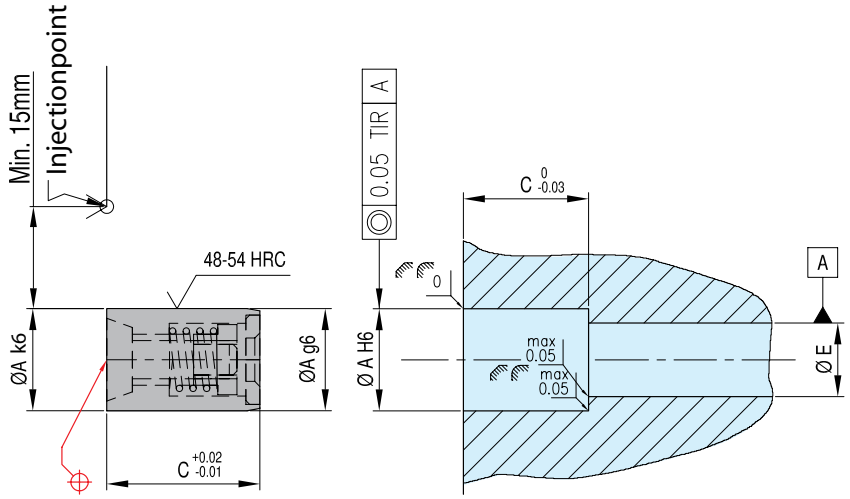

Tested on 2300 bar injection pressure

REF	A	C	E min
VA-08	8	12	4
VA-10	10	12	4
VA-12	12	12	4
VA-16	16	20	4
VA-20	20	20	4

Air-pins for Vacuum-/ Compressed air-valves Mat.: WAS ~1.2344

LS

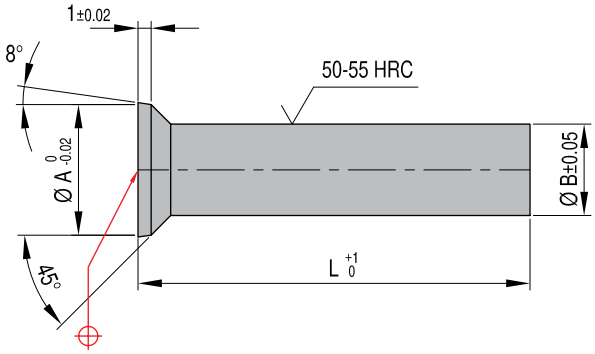

These pins avoid ejection problems due to a vacuum occuring in long, closed products. A blast of compressed air can be used in order to eject the moldings. Can be cut to required length and tapped for securing to ejector plates.

REF	L	A	B	C	Thread
LS-10	300	10	7	8	M5
LS-15	400	15	10	11	M6

Installation instructions

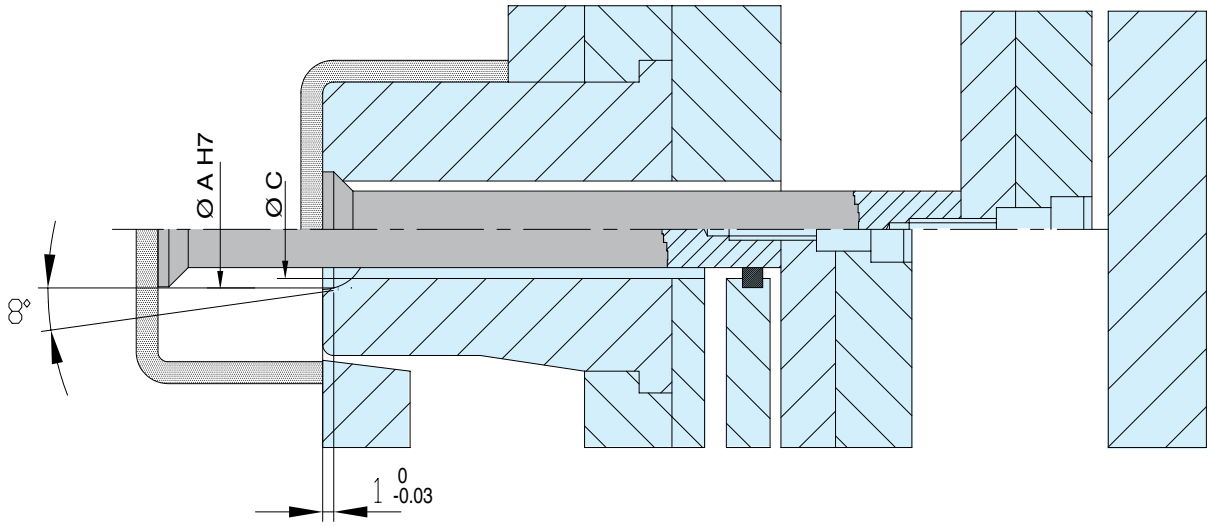

OKW-UR

Machine filter

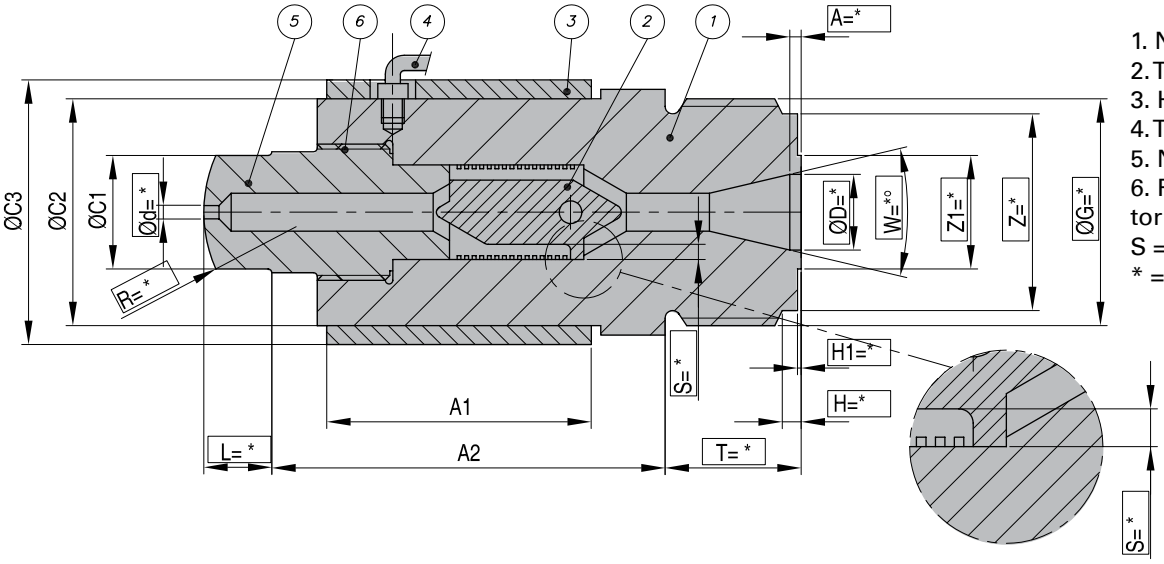

1. Nozzle body
2. Torpedo
3. Heater band
4. Thermocouple
5. Nozzle tip
6. Filter adjustment indicator

S = Filter opening

* = Required customer information

REF	Type	A1	A2	C1	C2	C3	d	R	L	T	D	W°	G	S	A	H	Z	H1	Z1
OKW-UR1	I = 300gr	89	102	30	60	70	*	*	*	*	*	*	*	*	*	*	*	*	*
OKW-UR2	II = 1200gr	120	138	30	80	90	*	*	*	*	*	*	*	*	*	*	*	*	*
OKW-UR3	III = 2500gr	150	170	40	100	110	*	*	*	*	*	*	*	*	*	*	*	*	*

Machinefilter

OKW-UR

The new OKW-UR Machine Filter Nozzle is an economical way to improve molding efficiency and part quality.
Capable of easily processing recycled material, the OKW-UR Machine Filter Nozzle prevents gate obstructions that may occur with foreign materials. Filter sizes from 0,2mm are available. The various filter gaps are obtained by changing the insert. Smooth and quick cleaning is accomplished by simply unscrewing the nozzle tip 4-8mm, purging to clean the filter, refasten tip and tighten nozzle tip.

The new OKW-UR Machine Filter Nozzle is appropriate for all unfilled plastics (e.g. PE, PP, PS, ABA and PA). Material flow has been thoroughly computed for minimal pressure loss and minimal heat increase. By avoiding sharp corners, material is not degraded by frictional heat or shear stress.

Part weight is dependent upon material type, flow volume, injection time and filter size. The OKW-UR Filter Nozzle is available in three sizes: 300 grams, 1200 grams and 2500 grams. A smooth flow channel enables fast color or material changes. A band heater on the filter body prevents material heat loss during filtration. The OKW-UR Machine Filter Nozzle has an average payback period of six months.

Instructions for use

Filter position

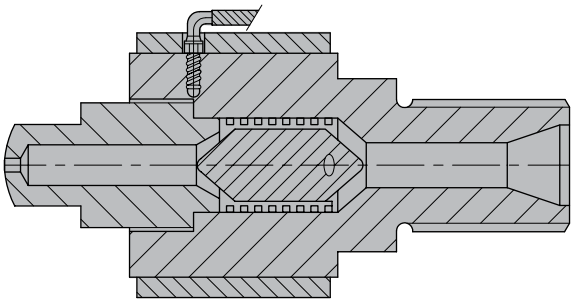

Cleaning position

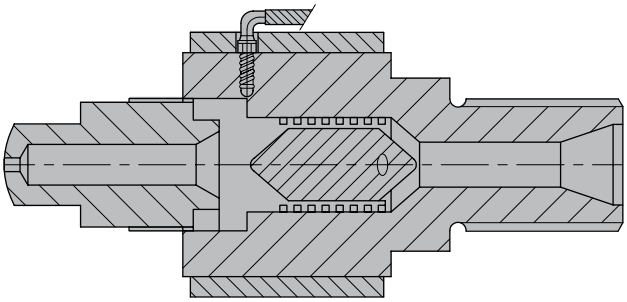

1. For depressurization of the screw, use screw pullback. Or, if there is no decompression available, leave screw in forward position.
2. Unscrew tip to end of thread (dependent on nozzle - typically 4-8mm).
3. Obeying safety rules, air purge one or two times with reduced injection pressure.
4. Fasten tip and tighten.
5. Resume normal information.

Included in the order
Heater band
Thermocouple
Ringwrench (for cleaning)
Directions for use

MILACRON®

TSW2220 EU

Thinswitch™ Limit Switch

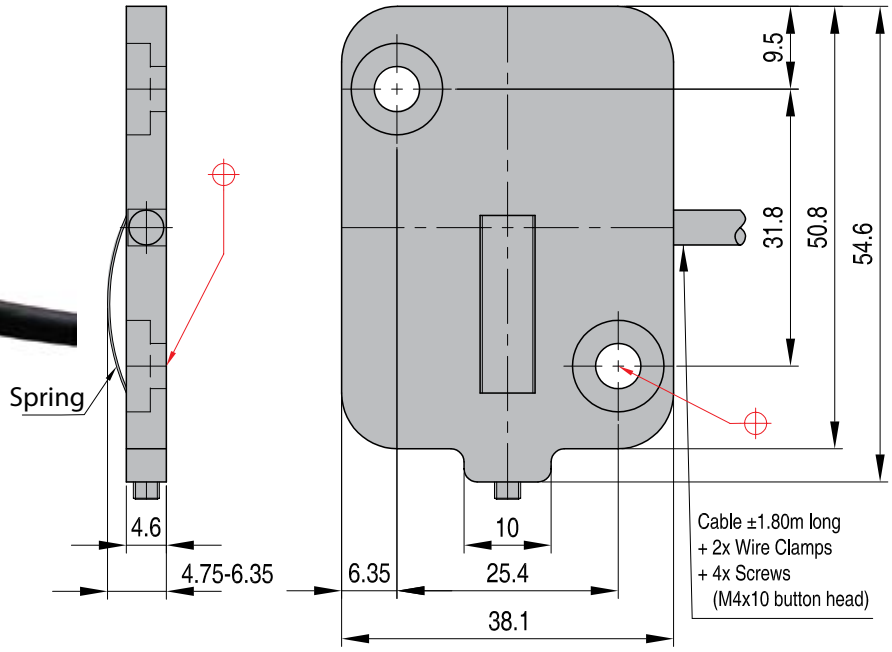

REF
TSW2220 EU

Specially designed to verify ejector plate return before permitting the mold to close in injection molding machines.
Thin enough to fit inside the ejector plate, it can also be used for core slides, or any place space is limited.
The Thinswitch Limitswitch has been tested for reliability over 10 million cycles without failure.
Two switches can be used in series for larger molds to ensure the ejector plate return, preventing costly mold damage.
Prevents costly damage by ensuring the ejector assembly is fully returned.
Adjustable operating point allows actuation between 4.75 and 6.35 mm from the base.
To be fitted behind the ejector plate in the space provided by stop button.
Included mounting hardware allows easy installation of the Thinswitch Limit Switch.
Stripped and tinned 1.80 m wire leads make the switch ready to install without modification.
79°C standard temperature rating enables use for most molding applications.
Quality tested over 10 million cycles to provide long dependable service.

48 VAC	1 Amps resistive
	1 Amps inductive
40 VDC (sea level)	1 Amps resistive
	1 Amps inductive
Operating Temperature	79°C
Switching	SPDT
Material Body	Fiberglass-reinforced nylon
Material Spring	Stainless Steel
Back Cover	Polyester film
Wire leads	0.5 mm stranded, 3-conductor, shielded cable, 1.80 m long, ends stripped and tinned
Safety class	IP 31
The Thinswitch™ Limit Switch is designed for use in very low power mold protection control circuits. It is not intended to switch heavy loads in power applications.	

Schematic Diagram

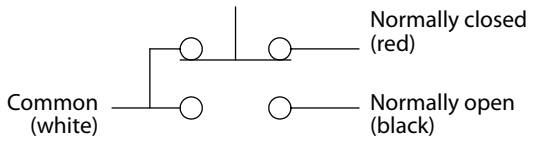

Thinswitch™ Limit Switch

TSW2220 EU

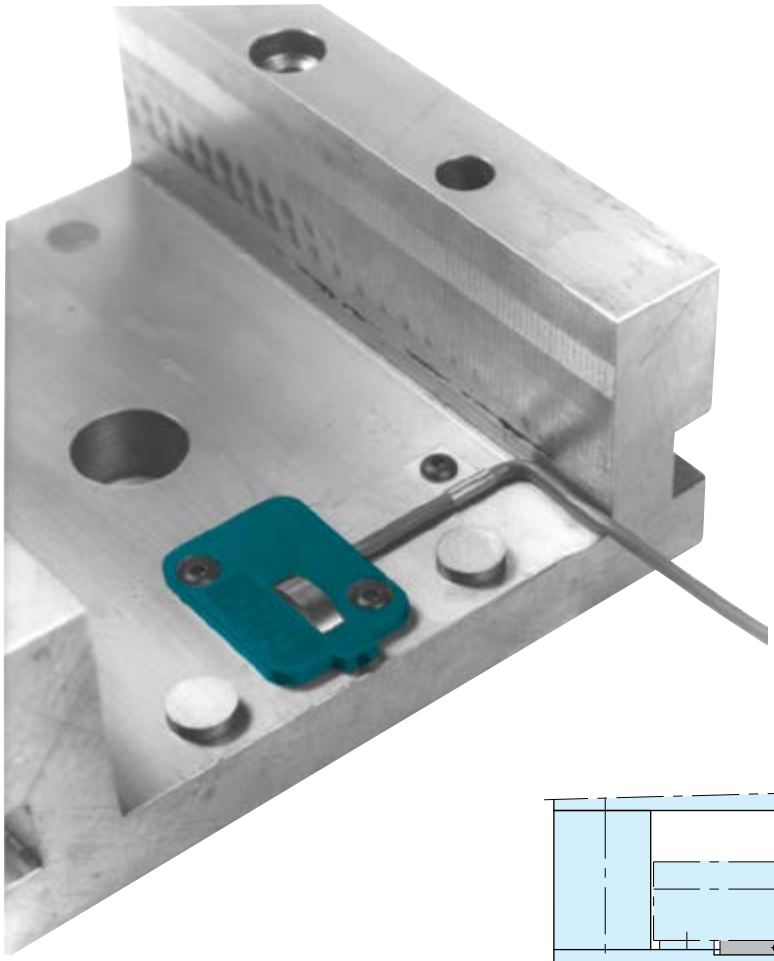

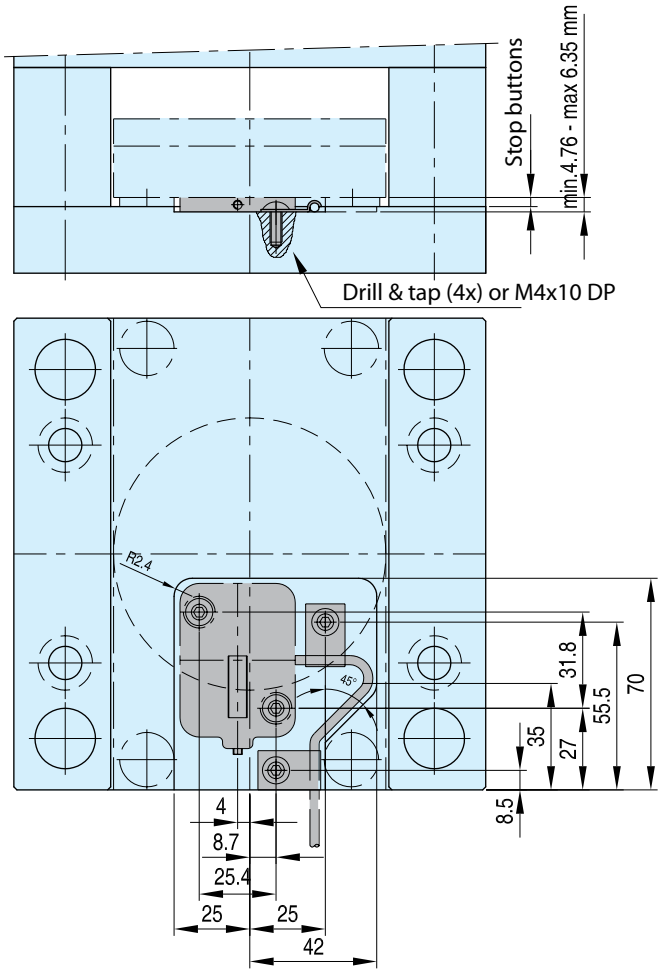

MILACRON®

TSW2222

Global Thinswitch®

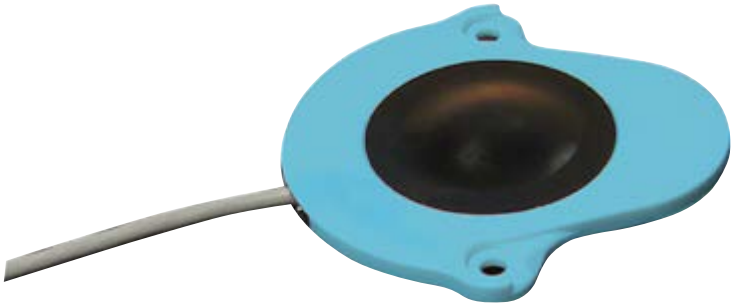

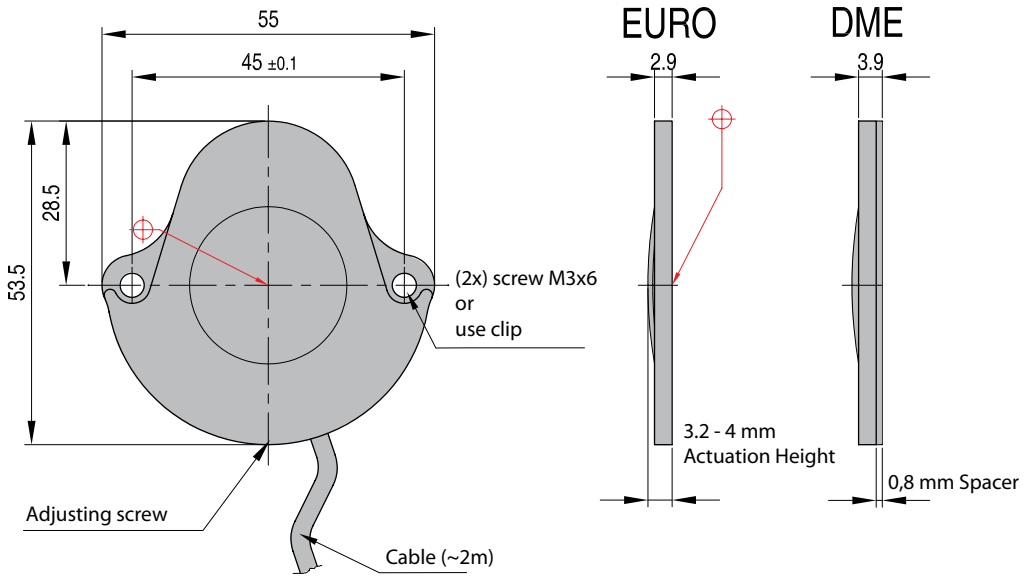

REF
TSW2222

A limit switch specially designed for use in injection molds with 3mm and 4mm rest buttons to verify that the ejector plate assembly is fully returned before allowing a mold to close after part ejection.
Switch mounting is accomplished using integral mounting holes, or by using a special bracket (included) that allows the switch to slide into place from the edge of the mold base without disassembling the mold.
A polyurethane dome and wire seal protect the internal switch mechanism from water or oil contamination, providing a longer switch life.
Reliability for over 14 million cycles without failure.
Prevents expensive mold repair and maximizes uptime.
Suitable for use in environments up to 80°C
SPST Switching action, with gold-plated internal contacts for reliable operation.
Comes with wire leads (28 gauge stranded) and 2-conductor shielded cables, 2m long.

Max T	80°C
Switching	SPST
Mat body	Fiberglass-reinforced nylon
Mat dome	Polyurethane
Back cover	Polyester film
Rated current (resistive) at 24VDC:	
mAmps	°C
100	30
90	50
80	68
70	80
Not intended for inductive loads	

Schematic Diagram

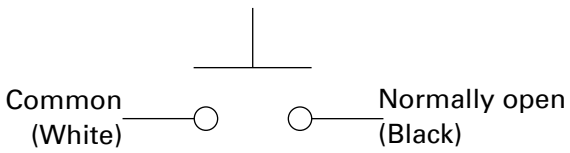

Global Thinswitch®

TSW2222

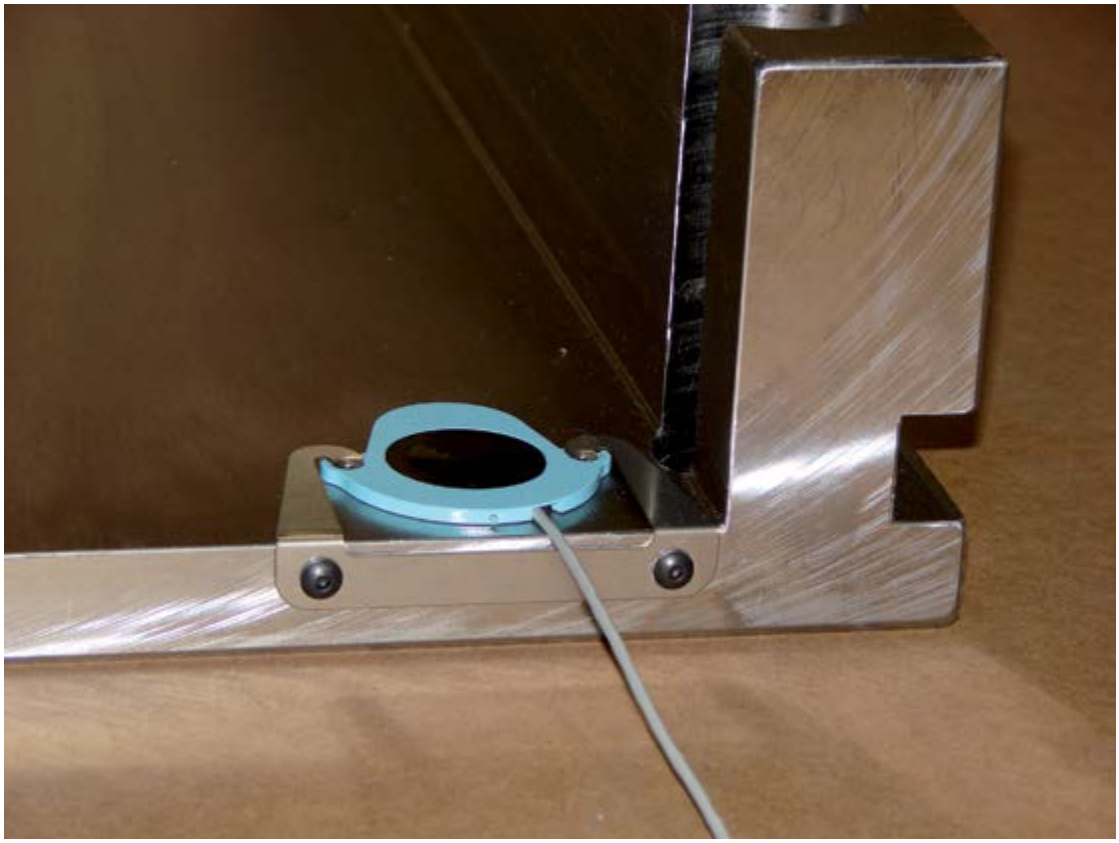

Clip

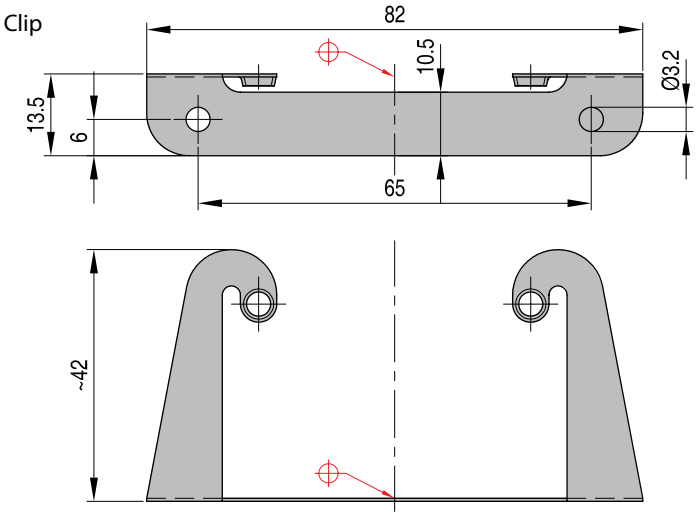

Installation instructions for bracket

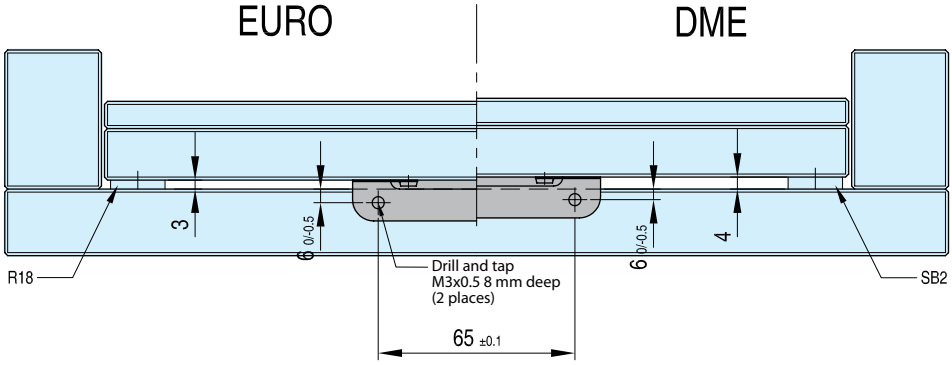

CV

CounterView® mold counter, 100-200 series

Accurately monitors mold operation, validates process monitoring data, and assists mold maintenance procedures.
With a maximum operating temperature of 250°F (121°C), this precise device uses a non-resettable, mechanical, 7-digit counter to record the number of times a mold closes. Easily mountable to accommodate changeovers for different mold insert heights, the unit's counting mechanism relies on a sensor that detects when the mold has closed.

Benefits

Positively monitors mold activity
Confirms process monitoring data
Maximizes mold maintenance procedures
Enables access to mold information online at www.moldmonitor.com
Glass-filled nylon housing for rugged durability

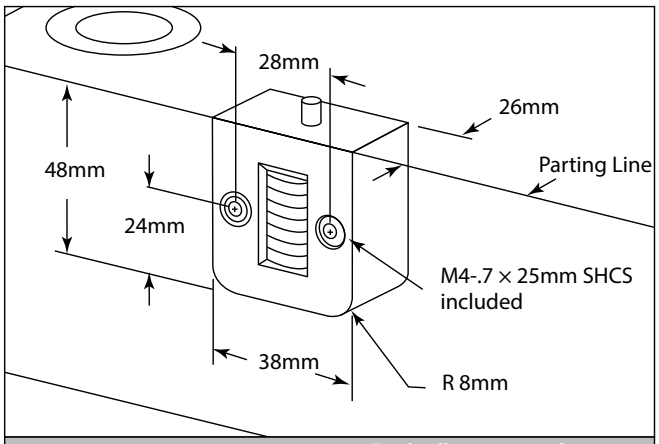

Parting Line Mount	Parting line mount makes unit easily visible.
CVPL100D	Inch Standard
CVPL200D	Metric Standard

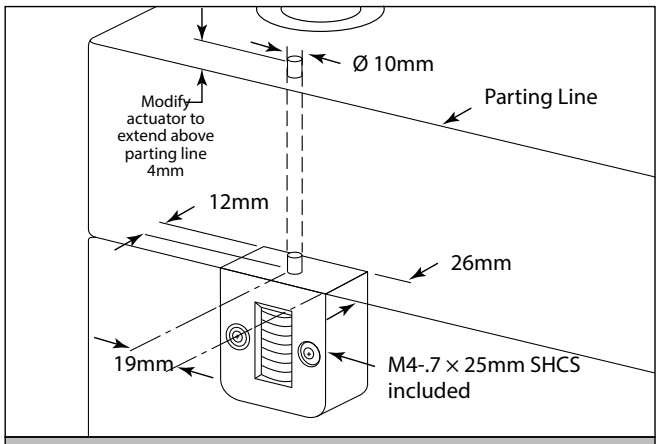

Internal Extension Mount	Machinable 8" (203mm) extension enables support plate or rail installation.
CVIN100D	Inch Standard
CVIN200D	Metric Standard

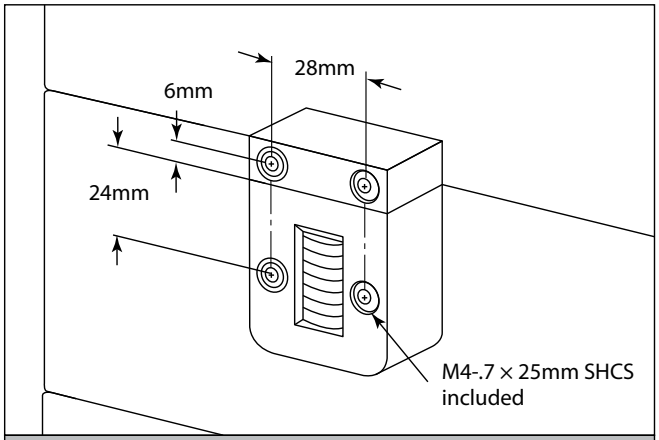

External Mount	Pocket machining not necessary. Designed specifically for retrofit applications.
CVEX100D	Inch Standard
CVEX200D	Metric Standard

Each CounterView has a unique serial number that allows users to view mold information online at moldmonitor.com.

CounterView is a registered trademark of Progressive Components.
U.S.# 5,571,539
Others issued and pending

CounterView® mold counter, R series

CV

The CounterView accurately monitors mold operation, validates process monitoring data, and assists mold maintenance procedures. With a maximum operating temperature of 121°C, this precise unit has a non-resettable, mechanical, 7-digit counter and a glass-filled nylon housing for rugged durability.

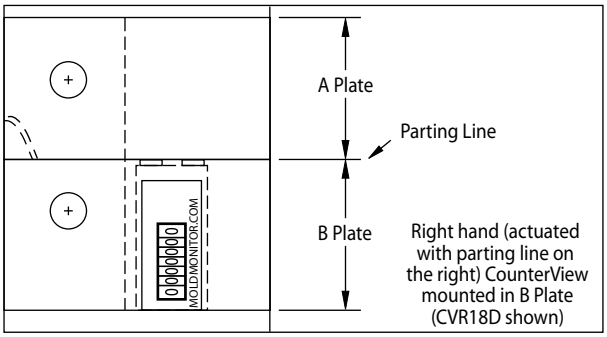

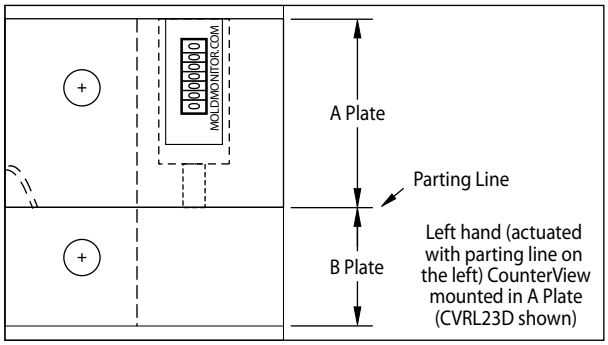

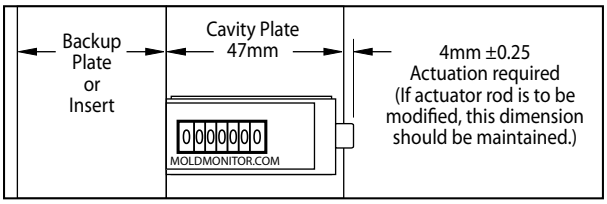

The R-Series CounterView can be installed in the A or B plates with a minimum thickness of 47mm. Larger plates utilize a threaded rod (included with each) that is pre-machined to the appropriate length for standard plate thicknesses to provide consistent actuation.

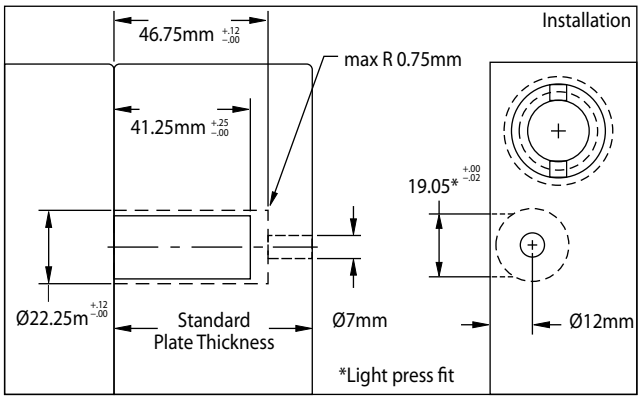

Parting Line at Left

Parting Line at Right

REF	Nominal plate thickness	REF	Nominal plate thickness
CVRL56D	56	**CVR56D**	56
CVRL66D	66	**CVR66D**	66
CVRL76D	76	**CVR76D**	76
CVRL96D	96	**CVR96D**	96

Inch Standards upon request

Inch Standards upon request

Each R-Series CounterView includes the actuator. All require attachment of the actuator rod to the threaded unit.

Replacement actuator rods

REF	Round CV Rod Length
RCV56	8.38mm
RCV66	18.39mm
RCV76	28.37mm
RCV96	48.38mm

Inch Standards upon request

MILACRON®

HZ160R

Hydraulic cylinder

Interchangeability acc. to ISO 6020/2-1981
Symbolization acc. to ISO 6099
Standardized accesories acc. to ISO 8133
Installation only with fasteners from property class 10.9
All **DME** HZ cylinders are fitted with magnets mounted on the piston to enable use of magnetic switches. Magnetic switches offer more straightforward installation than mechanical switches, simplifying setup and maintenance costs.

Pmax = 160 bar (for size 50 only 120 bar)
Tmax = 80° C (max working temperature)
Head + rear cushioning and air bleed
Max piston speed: Vmax = 0,7 - 0,8 m/s

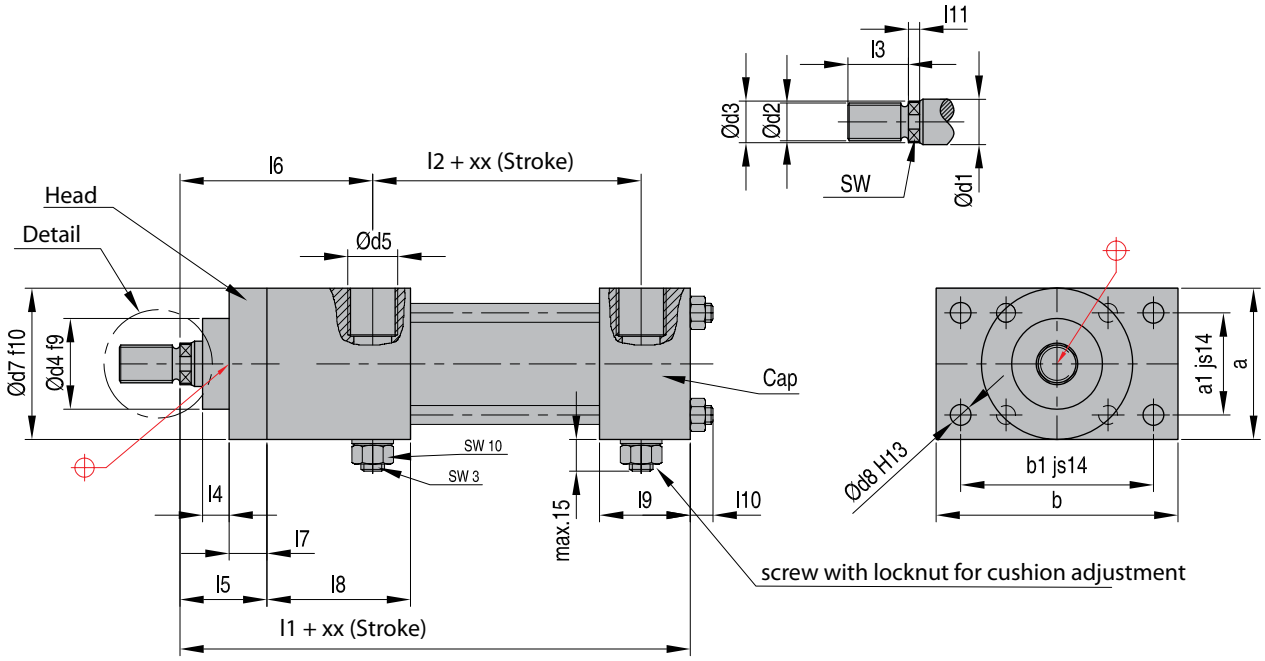

REF	d1	d2	d3	d4	d5	d7*	d8	l1	l2	l3	l4	l5	l6	l7	l8	l9	l10	l11	a	a1	b	b1	SW	S
HZ160R-25-xx	12	M10x1,25	11	24	R1/4"	44	5,5	114	51	14	7	25	51	10	38	24	8	5	40	27,0	64	51	10	16
HZ160R-32-xx	14	M12x1,25	13	26	R1/4"	50	6,5	128	55	16	9	35	61	10	38	25	10	8	46	33,2	70	58	11	17
HZ160R-40-xx	18	M14x1,50	17	30	R3/8"	57	11,0	153	68	18	8	35	63	10	43	37	12	6	60	41,0	109	87	15	20
HZ160R-50-xx	22	M16x1,50	21	34	R1/2"	70	13,5	159	72	22	9	41	67	16	43	37	16	8	75	52,0	128	105	18	20

FD=thrust in kg FZ=traction force in kg	P bar												xx(Stroke)												
	80		90		100		120		125		160														
d	FD	FZ	FD	FZ	FD	FZ	FD	FZ	FD	FZ	FD	FZ	20	50	80	100	125	160	200	250	300	350	400	500	600
25	392	302	442	340	490	377	589	453	613	471	785	603	S	S	S	S	S	S	S	UR					
32	643	520	724	585	804	650	965	780	1005	812	1286	1040	S	S	S	S	S	S	S	UR	UR				
40	1004	800	1131	902	1256	1001	1508	1203	1570	1251	2009	1601	S	S	S	S	S	S	S	UR	UR	UR	UR		
50	1570	1265	1767	1425	1963	1582	2356	1900					S	S	S	S	S	S	S	UR	UR	UR	UR	UR	UR

S = Standard
UR = Upon request

Hydraulic cylinder

HZ160S

All **DME** HZ cylinders are fitted with magnets mounted on the piston to enable use of magnetic switches. Magnetic switches offer more straightforward installation than mechanical switches, simplifying setup and maintenance costs.

Pmax = 160 bar (for size 50 only 120 bar)
Tmax = 80° C (max working temperature)
Head + rear cushioning and air bleed
Max piston speed: Vmax = 0,7 - 0,8 m/s

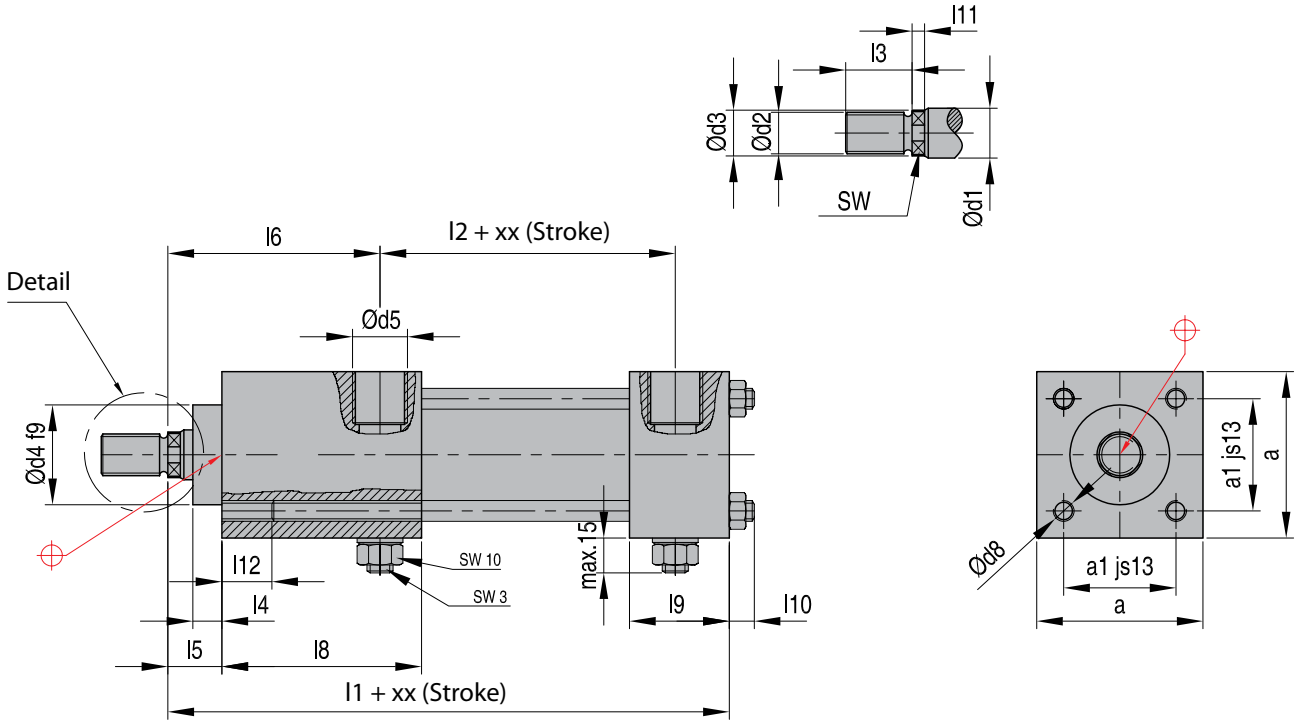

REF	d1	d2	d3	d4	d5	d8	l1	l2	l3	l4	l5	l6	l8	l9	l10	l11	l12	a	a1	SW	S
HZ160S-25-xx	12	M10x1,25	11	24	R1/4"	M5x0,80	114	51	14	7	15	51,0	48	24	8	5	12	40	28,3	10	16
HZ160S-32-xx	14	M12x1,25	13	26	R1/4"	M6x1,00	128	55	16	9	25	60,5	48	25	10	8	15	46	33,2	11	17
HZ160S-40-xx	18	M14x1,50	17	30	R3/8"	M8x1,00	153	68	18	8	25	63,0	53	37	12	6	20	60	41,7	15	20
HZ160S-50-xx	22	M16x1,50	21	34	R1/2"	M12x1,25	159	72	22	9	25	67,0	59	37	16	8	25	75	52,3	18	20

FD=thrust in kg FZ=traction force in kg	P bar												xx(Stroke)												
	80		90		100		120		125		160														
d	FD	FZ	FD	FZ	FD	FZ	FD	FZ	FD	FZ	FD	FZ	20	50	80	100	125	160	200	250	300	350	400	500	600
25	392	302	442	340	490	377	589	453	613	471	785	603	S	S	S	S	S	S	S	UR					
32	643	520	724	585	804	650	965	780	1005	812	1286	1040	S	S	S	S	S	S	S	UR	UR				
40	1004	800	1131	902	1256	1001	1508	1203	1570	1251	2009	1601	S	S	S	S	S	S	S	UR	UR	UR	UR		
50	1570	1265	1767	1425	1963	1582	2356	1900					S	S	S	S	S	S	S	UR	UR	UR	UR	UR	UR

S = Standard
UR = Upon request

HZ161U

Magnetic-switches for hydraulic cylinder HZ 160

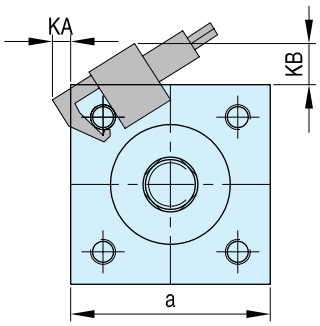

DME introduces the new "Universal" sensor HZ161U as replacement for the REED-switch HZ161U. The universal sensor combines the functionality of REED magnetic sensor with an inductive magnetic sensor, greatly reducing the interference caused by ferrous objects (such as steel mold plates). This gives more accurate readings than the old REED sensor.
Typically 2 sensors per cylinder; to be ordered seperately.

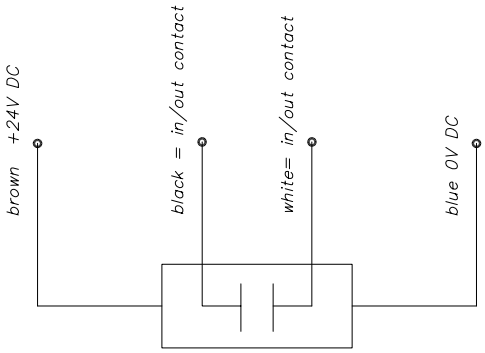

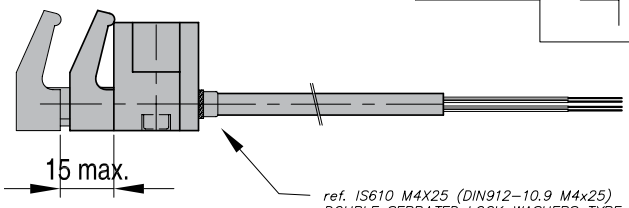

ref. IS610 M4X25 (DIN912–10.9 M4x25)
DOUBLE SERRATED LOCK WASHERS TYPE DD STEEL AND STEEL ZINC PLATED M4

REF
HZ161U

For	a	KA	KB
HZ160 25	40	9,2	23,2
HZ160 32	46	9	23,5
HZ160 40	60	8	21
HZ160 50	75	7,7	18,5

Technical specification	
Supply	24 VDC ± 10%
Protection	polarity inversion
Output	clean contact 0V
Max. switching voltage	125 VAC
Max. switching current	800 mA
Max. switching frequency	60 Hz
Max. switching power	20 W
Electric life at rated power (operations)	10,000,000
Hysteresis	±0,02 mm typical
24 volt disconnection delay	15 m sec.
Max. working temperature	+80° C - +176° F
Cable (Extraflex armoured + transp. PVC sheath)	mm Ø6 x 3000
Section wires	4x0,25 mm²
Serial signal connection	ok, max 6 switches
Switch type	magnet-resistive
Repeatability	> 0,05 mm.
ON minimum time	3 msec.
Max. flow speed	15 mt/sec.
Degree of protection against liquids	IP 67 (DIN 40050)
Dimensions	39x24x28 mm

Spare parts

HZ160 Spare parts

1. Rod end
2. Rod cartridge
3. Rod cartridge seals (kit)
4. Rod
5. Tube
6. Piston
7. Piston seals (kit)
8. Piston magnet (for magnetic cylinder)
9. Magnetic switch with bracket
10. Screw with locknut for cushion adjustment

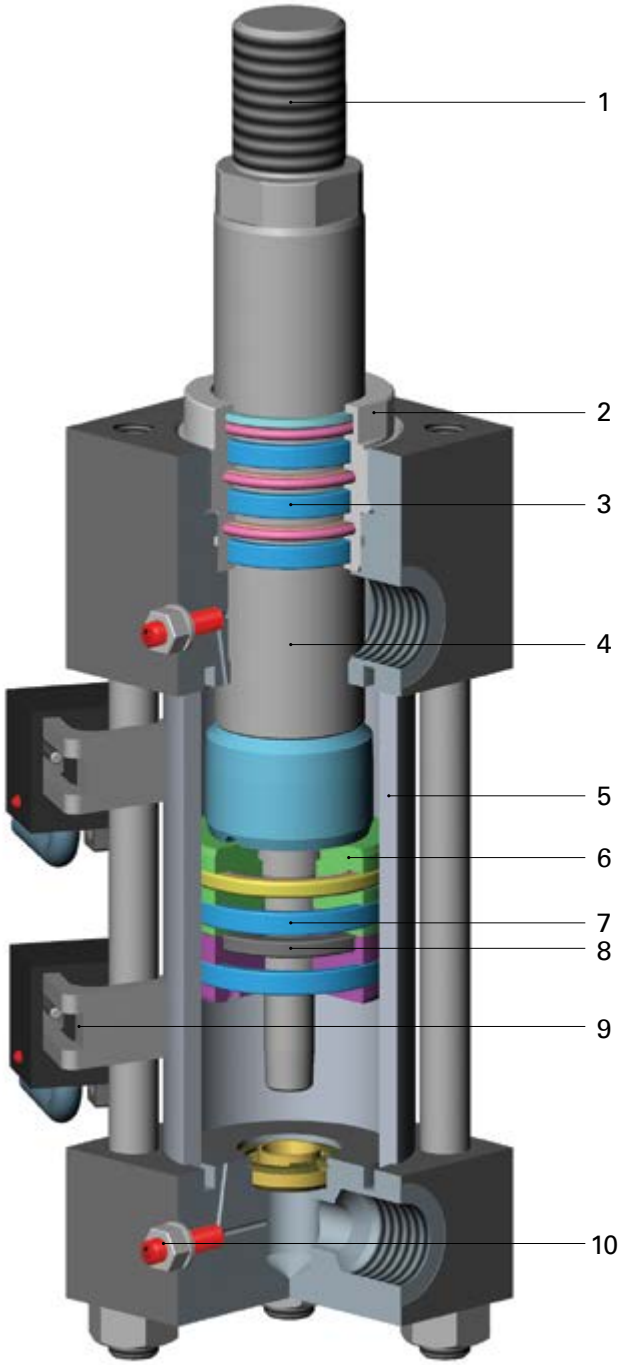

REF (3) ROD CARTRIDGE SEAL	FOR	REF (7) PISTON SEALS	FOR
V160-25-12-KITC	HZ160 25	V160-25-12-KITP	HZ160 25
V160-32-14-KITC	HZ160 32	V160-32-14-KITP	HZ160 32
V160-40-18-KITC	HZ160 40	V160-40-18-KITP	HZ160 40
V160-50-22-KITC	HZ160 50	V160-50-22-KITP	HZ160 50
V160-63-28-KITC	HZ160 63	V160-63-28-KITP	HZ160 63
V160-80-36-KITC	HZ160 80	V160-80-36-KITP	HZ160 80

HZ260

Hydraulic cylinder

All **DME** HZ cylinders are fitted with magnets mounted on the piston to enable use of magnetic switches. Magnetic switches offer more straightforward installation than mechanical switches, simplifying setup and maintenance costs.

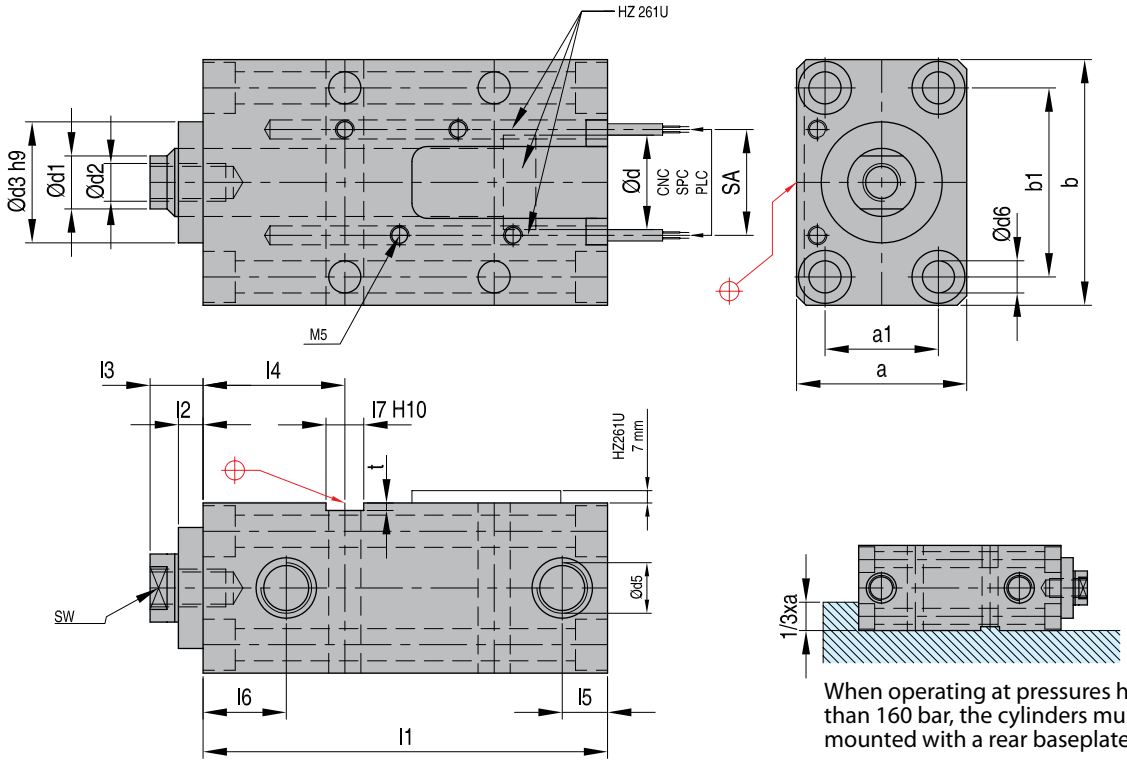

When operating at pressures higher than 160 bar, the cylinders must be mounted with a rear baseplate

						Stroke														
						20	50													
REF - d	d1	d2	d3	d5	d6	l1	l2	l2	l3	l4	l5	l6	l7	a	a1	b	b1	SW	t	SA
HZ260 25	18	M10	32	R1/4"	8,5	77	107	6,5	14	37	12	22	10	45	30	65	50	14	2	28
HZ260 32	22	M12	34	R1/4"	10,5	80	110	8	15	40	12	22	12	55	35	75	55	18	3	30
HZ260 40	22	M14	34	R1/4"	10,5	93	123	7	17	43	14	24	12	63	40	85	63	18	3	36
HZ260 50	28	M20	42	R1/4"	13	95	125	8	20	45	14,5	25	15	75	45	100	76	24	5	42

FD = thrust in kg FZ = traction force in kg	P bar											
	80		100		125		160		200		250	
d	FD	FZ	FD	FZ	FD	FZ	FD	FZ	FD	FZ	FD	FZ
25	392	189	491	236	613	295	785	378	981	473	1227	591
32	643	339	804	424	1005	530	1286	678	1608	848	2010	1060
40	1005	701	1256	876	1570	1095	2010	1402	2512	1752	3140	2190
50	1570	1078	1963	1347	2453	1684	3140	2155	3925	2694	4906	3388

Reed-switches for hydraulic cylinder HZ260

HZ261

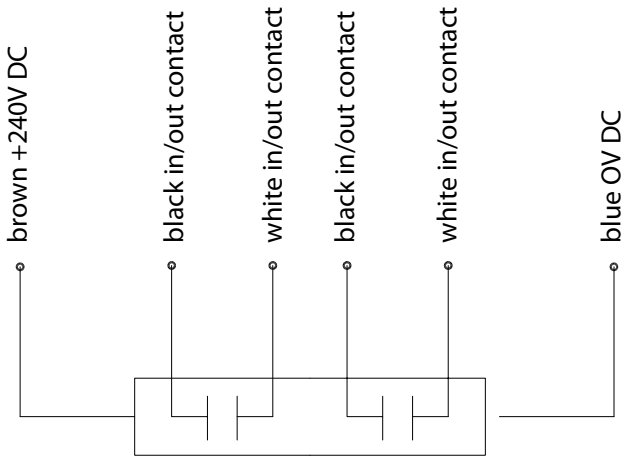

DME introduces this new "Universal" sensor as replacement for the REED-switch HZ261. The Universal sensor combines the functionality of REED magnetic sensor with an inductive magnetic sensor, greatly reducing the interference caused by ferrous objects (such as steel mold plates). This gives more accurate readings than the old REED sensor.

HZ261U is produced in 2 versions with different cable lengths between sensor and connection box. The table indicates the version suitable for each cylinder.

Bore Ø	Stroke	
	20 mm	50 mm
25	**HZ261 U1**	**HZ261 U1**
32	**HZ261 U1**	**HZ261 U1**
40	**HZ261 U1**	**HZ261 U2**
50	**HZ261 U1**	**HZ261 U2**
63	**HZ261 U2**	**HZ261 U2**
80	**HZ261 U2**	**HZ261 U2**
100	**HZ261 U2**	**HZ261U 2**

Technical Specifications	
Max switching voltage	125V AC
Max current (resistive load)	800 mA
Max switching power	300 W
Operating temperature	-20 - -> +80°C

HZ261

Interlocking cylinder

1. Rod seals (kit)
2. Rod cartridge
3. Rod
4. Piston
5. Piston seals (kit)
6. Piston magnet (for magnetic cylinder)
7. Body
8. Magnetic switch with screws (accessory)

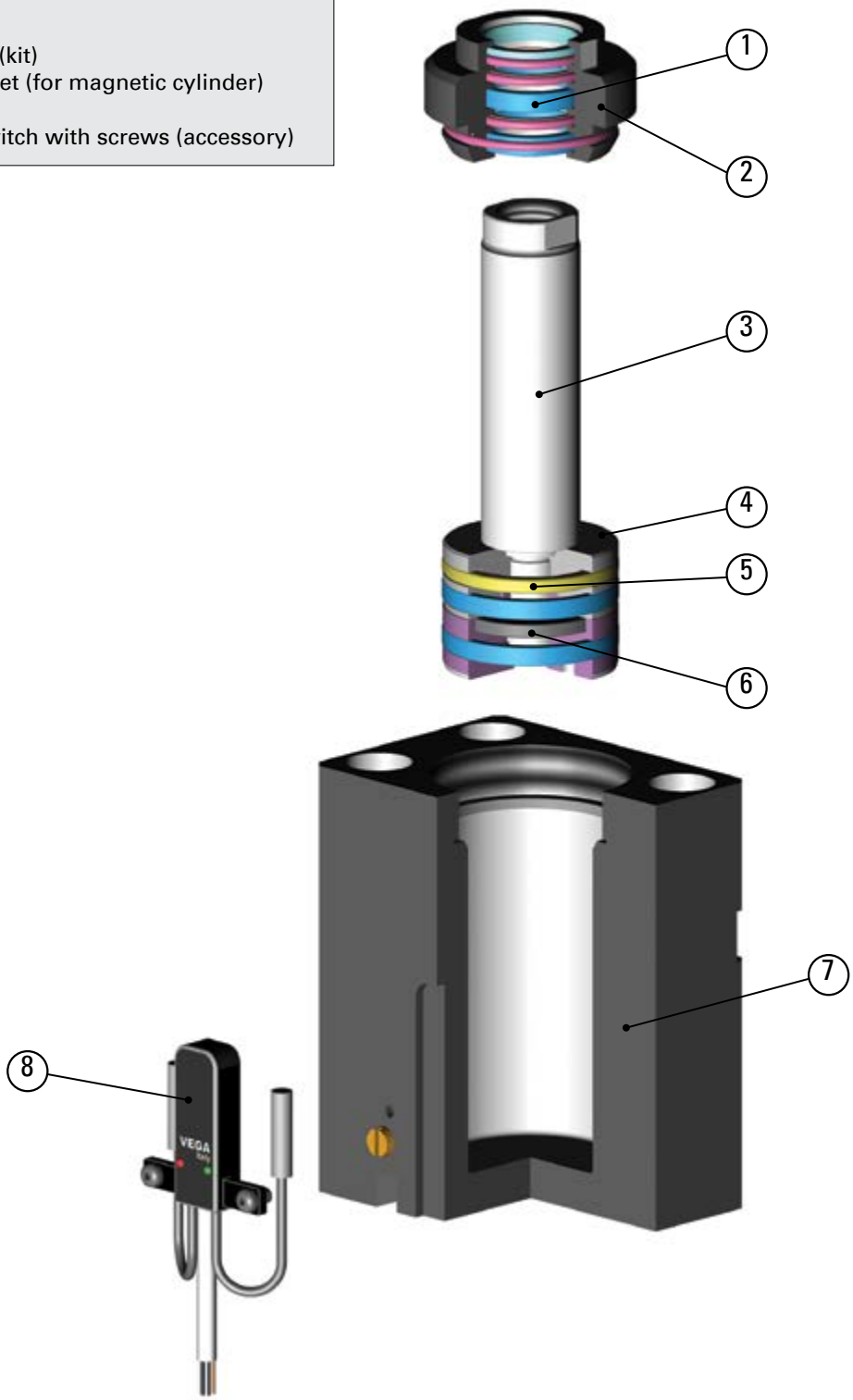

REF (1) Rod cartridge seals	FOR	REF (5) Piston seals	FOR
HZ262 25 G	HZ260 25	HZ262 25 K	HZ260 25
HZ262 32 G	HZ260 32	HZ262 32 K	HZ260 32
HZ262 40 G	HZ260 40	HZ262 40 K	HZ260 40
HZ262 50 G	HZ260 50	HZ262 50 K	HZ260 50

Interlocking cylinder

VZ1000

Interlocking cylinder
Stroke h = 10, 50, 100 mm
Special length on request.
The returnpipes must be unobstructed and vent directly to the tank.

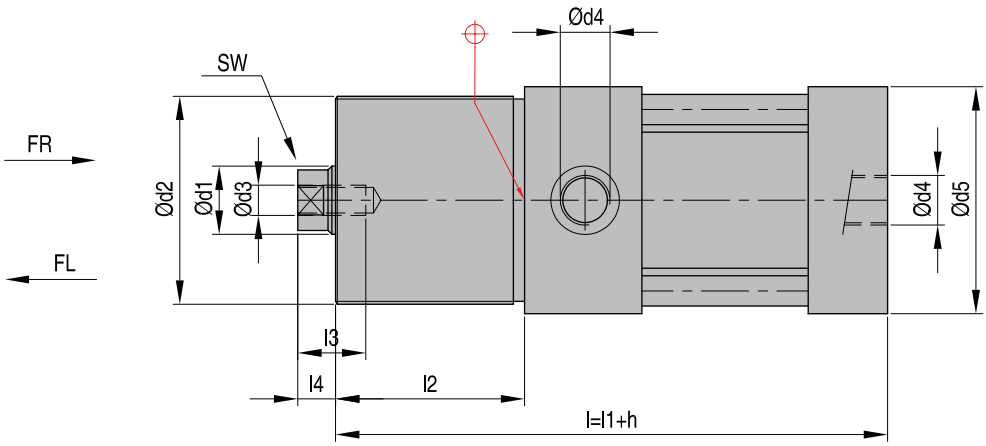

PISTON-ø d	Holding force {kN} Type HT	Stroke force {kN}/100 bar	Retraction force {kN}/100 bar
25	20	4,9	2,9
32	60	6,8	4,9
40	88	12,6	6,4
50	140	19,6	9,5
63	224	31,2	15,3
80	360	50,3	25,6
100	564	78,5	40,1
125	880	1222,7	59,1

REF piston ø	d1	d2	d3	d4	d5	l1	l2	l3	l4	SW
Vz1000 25	16	M55 x 2	M8	1/4"	60	140	50	18	10	14
Vz1000 32	20	M65 x 2	M10	1/4"	70	150	60	20	12	17
Vz1000 40	28	M85 x 2	M16	1/4"	95	150	70	25	15	22
Vz1000 50	36	M90 x 2	M20	3/8"	100	160	80	33	21	27
Vz1000 63	45	M110 x 2	M27	3/8"	120	187	90	41	25	36
Vz1000 80	56	M140 x 2	M30	1/2"	150	222	100	43	28	46
Vz1000 100	70	M160 x 3	M42	1/2"	170	248	110	45	33	55
Vz1000 125	90	M170 x 3	M56	3/4"	190	256	120	50	33	70

How to order (cylinder without sensor):

VZ1000 25 / h10 (10, 50, 100)
REF piston stroke

Info VZ 1000

Interlocking cylinder

Released position

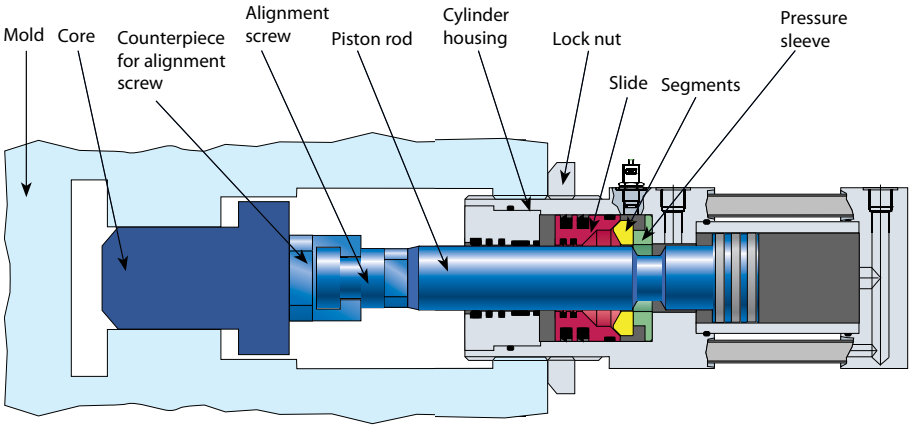

Start of locking

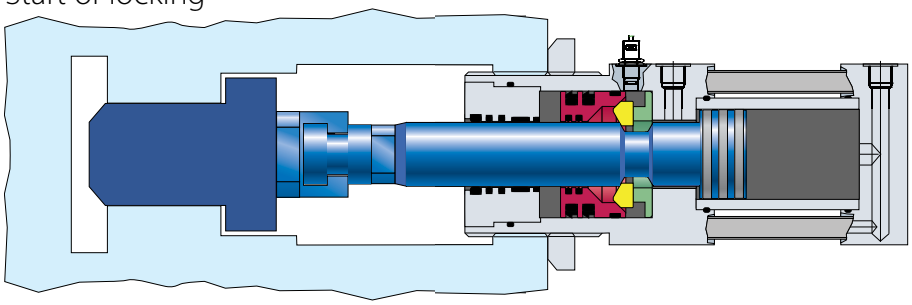

Completely locked position

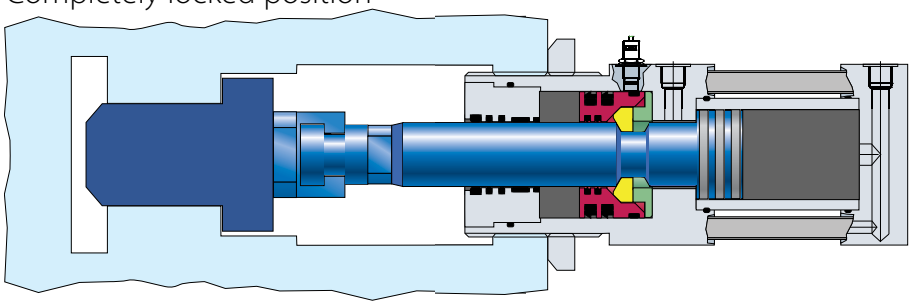

Locked position with applied injection pressure

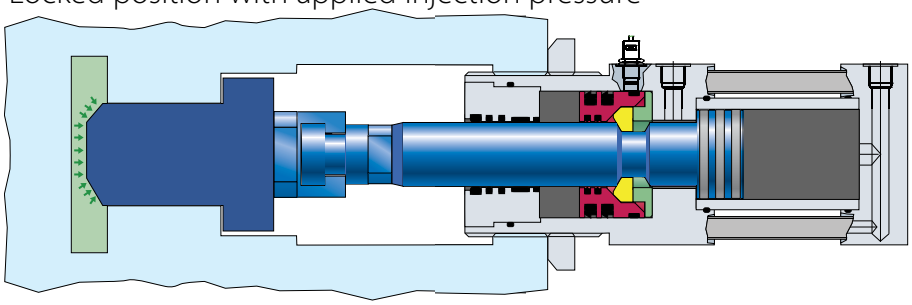

Functional process
VZ1000 double acting cylinders whose piston rod is extended by applying hydraulic pressure.
When the final position of the piston rod is reached the locking slide moves and presses the locking segments into the annular groove of the piston rod. The segments are fixed in radial and axial position, that means: the piston rod is positively locked.

The hydraulic pressure can be switched off. The retraction of the piston rod is operated by pressurising the rod sided piston surface. This counter pressure pushes the slide off its locking position and the segments move out of the annular groove while the piston rod retracts.
The slide is locked with spring operation and released hydraulically.

The piston rod always reaches one defined final position without the possibility to compensate tolerances or elasticities. The lock proceeds with positive lock without pre-load.

Interlocking cylinder

Info VZ1000

Inductive proximity switches enable the electronic sensing of the locked condition and core position respectively. The cylinders can be equipped with two sensors each.

Two types of inductive sensors are available:
- 3-wire DC PNP, positive switching
- 2-wire DC NAMUR in two designs each: with cable or with angled plug

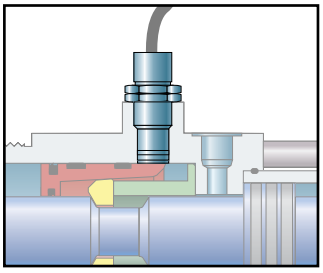

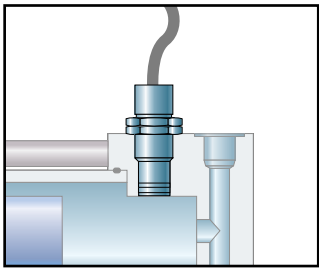

Core in - Piston rod extended and locked

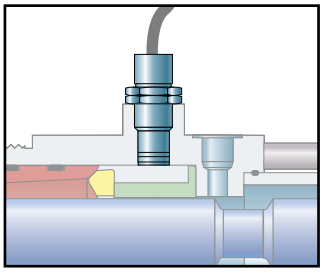

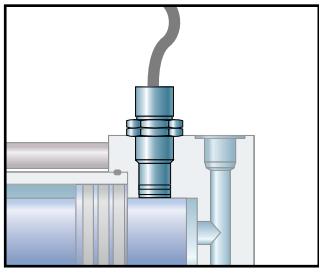

Core out - Piston rod retracted and unlocked

PNP Sensor
Three wires are connected directly with the machine. A direct voltage of 10 - 30 V is necessary

Technical data	
Admissible ambient temperature range:	up to +70°
Function of switching element:	PNP-norm. open (all series except B6) PNP-normally shut (only B6)
Operational voltage range:	10 ... 30 VDC
Protection class according to DIN 40050:	IP 67
Connection cable:	2m PVC-cable 3 x Ø 0,5mm²
Smallest allowed bending radius of cable:	50mm

NAMUR Sensor
The NAMUR sensor is designed to be used in hazardous areas and is "intrinsically safe". These sensors are wired to an amplifier (included in delivery together with the sensors) which is connected to the control panel of the moulding machine. Normally the sensors are driven with 230 V AC, optional amplifiers of 110 V AC and 24 V DC are also available.
Max. temperature: 70°C

Technical data	
Admissible ambient temperature range:	up to +70°
Function of switching element:	signal change (with connection to amplifier)
Operational voltage range:	10 ... 30 VDC
Protection class according to DIN 40050:	IP 67
Connection cable:	2m PVC-cable 2 x Ø 0,5mm²
Smallest allowed bending radius of cable:	50mm

How to order (cylinder with sensor):

VZ1000 25 / h10 (10, 50, 100) / B8

REF piston stroke sensor code

Info VZ 1000

Designation of switches and their indication function

Switching function	PNP		NAMUR		Indication function
	cable	ang. plug	cable	ang. plug	
normally shut	B6	-	B1	-	locking axial
normally open	B7	B27	B2	B22	end of stroke axial
normally open	B8	B28	B3	B23	locking radial
normally open	B9	B29	B4	B24	end of stroke radial

Possible combinations

	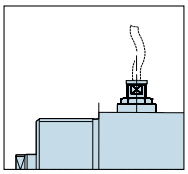 rod sided radial		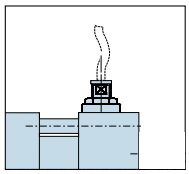 piston sided radial		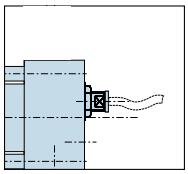 piston sided axial
PNP	B8 / B28	with	B9 / B29	or	B7 / B27
NAMUR	B3 / B23	with	B4 / B24	or	B2 / B22

Possible combinations

	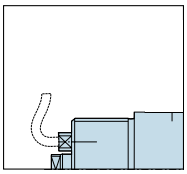 rod sided axial		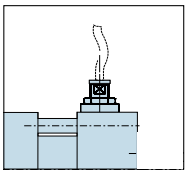 piston sided radial		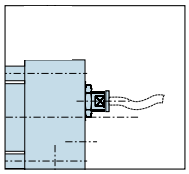 piston sided axial
PNP	B6	with	B9 / B29	or	B7 / B27
NAMUR	B1	with	B4 / B24	or	B2 / B22

Ordering advice:
Determine before ordering whether your application needs sensors for detecting the locking condition! (A retrofit is only possible with exchange of the cylinders housing parts)
Decide which position is required (locked, unlocked or both positions)
Decide on type of sensor (PNP or NAMUR)

For further information please contact **DME**

How to order (cylinder without sensor):

VZ1000 25 / h10 (10, 50, 100)
REF piston stroke

How to order (cylinder with sensor):

VZ1000 25 / h10 (10, 50, 100) / B6
REF piston stroke sensor code

Wiring diagram — 3-wire PNP

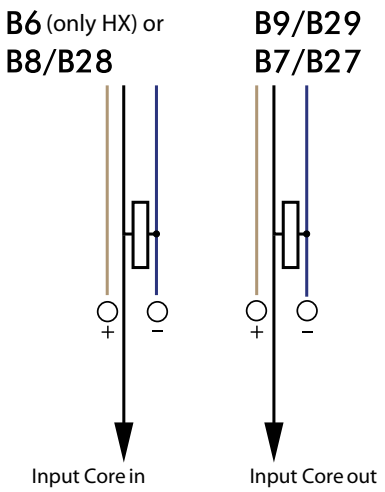

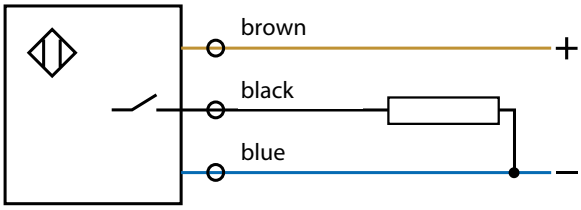

PNP Normally open (+) switching (all except B6)

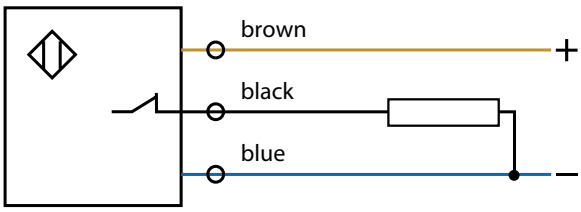

PNP Normally shut (+) switching (only B6)

Wiring diagram — 2-wire NAMUR

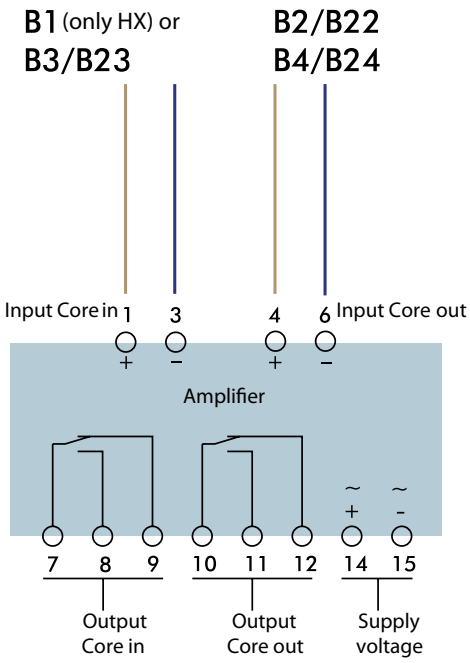

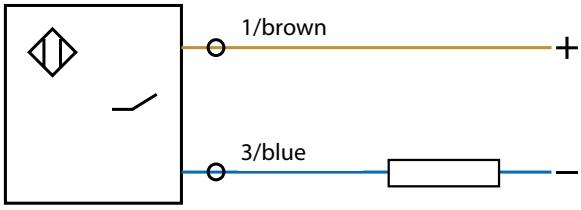

NAMUR signal change (connected to amplifier)

VZ1010

Adjusting screws

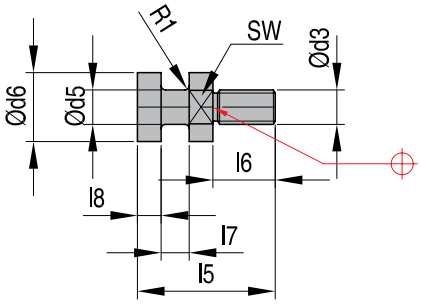

REF	M	d5	d6	l5	l6	l7	l8	r	SW	R
VZ1010 25	M8	8	16	32	14,5	6,5	5,5	1,0	14	320
VZ1010 32	M10	10	20	32	14,5	6,5	5,5	1,0	17	320
VZ1010 40	M16	16	25	40	20,0	7,0	6,0	1,0	22	400
VZ1010 50	M20	18	32	56	28,0	10,0	10,0	1,0	27	500
VZ1010 63	M27	24	40	75	39,0	13,0	12,0	1,5	36	630
VZ1010 80	M30	30	52	89	35,0	19,0	19,0	2,0	46	800
VZ1010 100	M42	40	65	115	40,0	25,0	25,0	2,0	55	1000
VZ1010 125	M56	55	80	135	45,0	30,0	30,0	2,0	70	1200

VZ1020

Mounting flanges

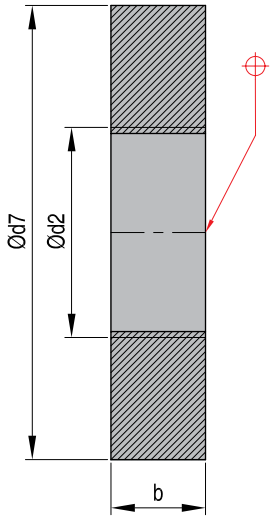

REF	M	d7	b
VZ1020 25	M55x2	120	25
VZ1020 32	M66x2	130	30
VZ1020 40	M85x2	150	30
VZ1020 50	M90x2	180	35
VZ1020 63	M110x2	210	40
VZ1020 80	M140x2	240	40
VZ1020 100	M160x3	290	45
VZ1020 125	M170x3	360	45

VZ1030

Groove nuts

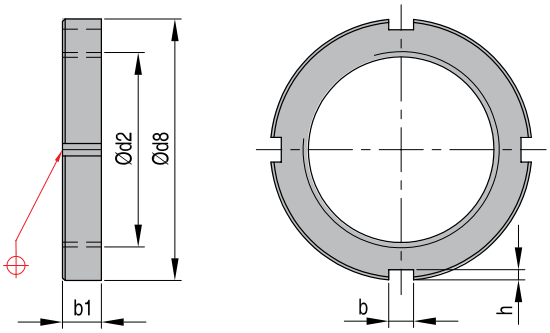

REF	M	d8	b1	b2	h
VZ1030 25	M55x2	75	11	7	3,0
VZ1030 32	M66x2	85	12	7	3,0
VZ1030 40	M85x2	110	16	8	3,5
VZ1030 50	M90x2	120	16	10	4,0
VZ1030 63	M110x2	145	19	12	5,0
VZ1030 80	M140x2	180	22	14	6,0
VZ1030 100	M160x3	210	25	16	7,0
VZ1030 125	M170x3	220	26	16	7,0

Quick-action clamping system

Bakra

- Maintenance-free, selflocking bayonet type quick-action clamping system suitable for mold weights up to 1000 kg.
- Multi-purpose application suitable for all horizontal and vertical injection molding machines with 2 or 4 tiebars, as well as barless design up to approx. 1800 kN.
- Quick mold-change without requiring additional tools.
- The system only requires interchanging locating rings on the mold.
- The set also includes compact adapter plates, to be mounted on the machine with thermal insulating sheets and cooling connectors when required.
- Step-by-step refitting of molds and machines possible.

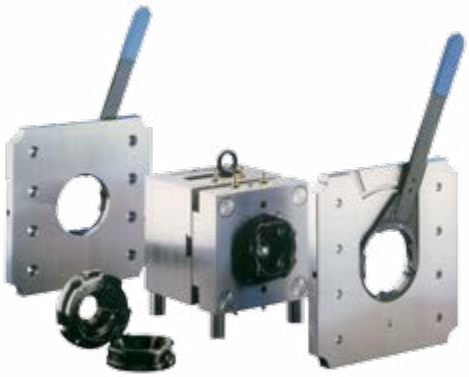

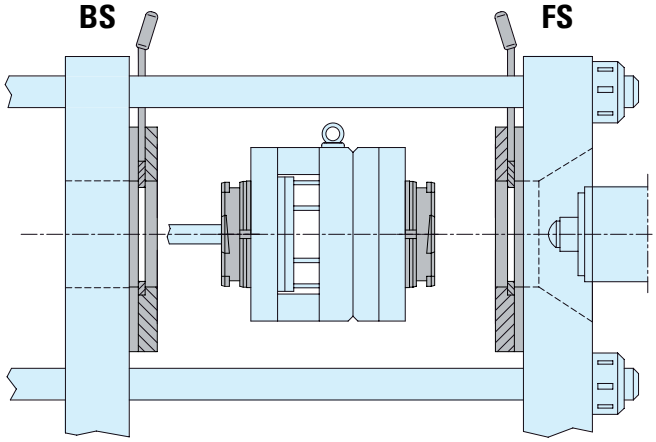

Part list

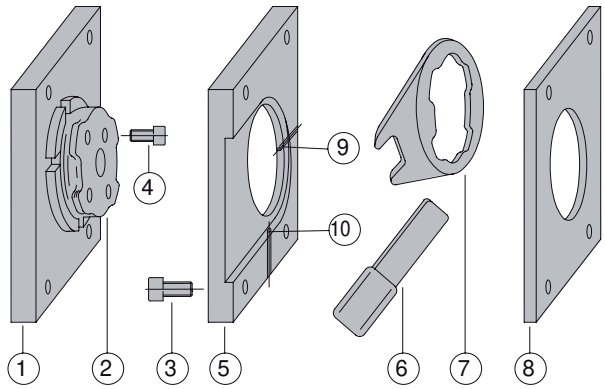

1 Mold Clamping Plate
2 Locating Ring
3 SHC-screw
4 SHC-screw
5 Adapter Plate
6 Wrench
7 Locking Ring
8 Thermal Insulating Sheet
9 Retention Pin
10 Spring Loaded Set screw

Cost-efficiency comparison for mold-change on a 1000 kN injection molding machine.

	Clamp DIN 6316 and clamping screw	Bakra
No. of mold changes / year	150	150
No. of operators / change	2	1
Hours required / change	2 x (0,5 h (= 30 Min.))	0,083 h (= 5 Min)
Purchase costs / 5-year depreciation	€ 400 (€ 80 / a)	€ 3800 (€ 760 / a)
Wages / year (€ 41 / h person)	€ 6150	€ 512,50
Machine down times / year (€ 51 / h)	€ 3825	€ 637,50
Costs / year	**€ 10055**	**€ 1910**
Savings / year		**81%**

The complete set contains the following items:

2 Adapter plates (BS/FS)
2 Locking rings (BS/FS)
1 Wrench
2 Locating rings (BS/FS)

Please specify type of molding machine.
Insulating sheets upon request.
Screws are included.

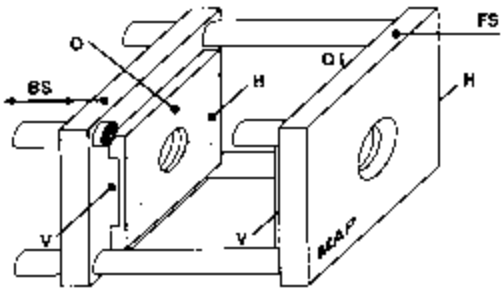

BS = moveable half
FS = fixed half
H = rear *

O = top*
V = front*

* Please specify side of locking system

AD

Adapter plates

Mat.: 1.2312
BS and FS are mirror-inverted

Mold safety device is available as option.

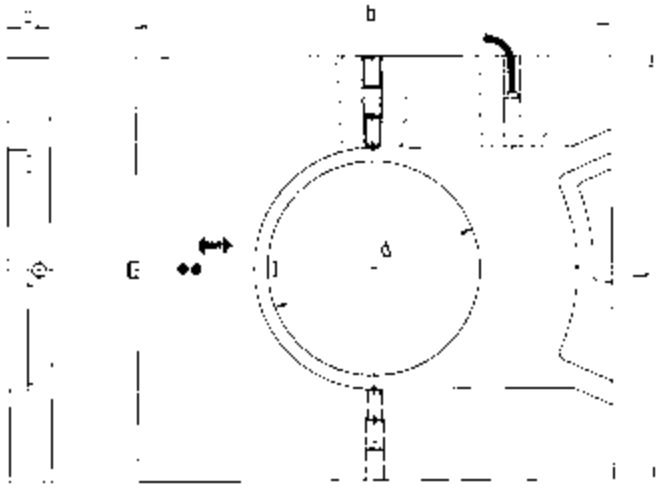

REF	d	l x b	s	REF	d	l x b	s	REF	d	l x b	s	REF	d	l x b	s
AD	110	218 x 246	22	AD	110	410 x 446	22	AD	125	218 x 246	27	AD	125	410 x 446	27
AD	110	246 x 246	22	AD	110	446 x 446	22	AD	125	246 x 246	27	AD	125	446 x 446	27
AD	110	246 x 296	22	AD	110	496 x 496	22	AD	125	246 x 296	27	AD	125	496 x 496	27
AD	110	265 x 396	22	AD	110	496 x 546	22	AD	125	265 x 396	27	AD	125	496 x 546	27
AD	110	280 x 400	22	AD	110	520 x 520	22	AD	125	280 x 400	27	AD	125	520 x 520	27
AD	110	296 x 296	22	AD	110	530 x 530	22	AD	125	296 x 296	27	AD	125	530 x 530	27
AD	110	296 x 346	22	AD	110	546 x 596	22	AD	125	296 x 346	27	AD	125	546 x 596	27
AD	110	346 x 346	22	AD	110	580 x 580	22	AD	125	346 x 346	27	AD	125	580 x 580	27
AD	110	346 x 396	22	AD	110	596 x596	22	AD	125	346 x 396	27	AD	125	596 x 596	27
AD	110	396 x 396	22	AD	110	596 x 646	22	AD	125	396 x 396	27	AD	125	596 x 646	27
AD	110	396 x 646	22	AD	110	646 x 646	22	AD	125	396 x 646	27	AD	125	646 x 646	27
AD	110	400 x 450	22	AD	110	646 x 696	22	AD	125	400 x 450	27	AD	125	646 x 696	27
AD	110	410 x 410	22	AD	110	696 x 696	22	AD	125	410 x 410	27	AD	125	696 x 696	27

SP

Locking rings

Mat.: 1.2312 ~ 1030 N/mm²
BS and FS are mirror-inverted

REF	d	Type
SP	110	BS*
SP	110	FS*
SP	125	BS*
SP	125	FS*

*BS = moveable half
*FS = fixed half

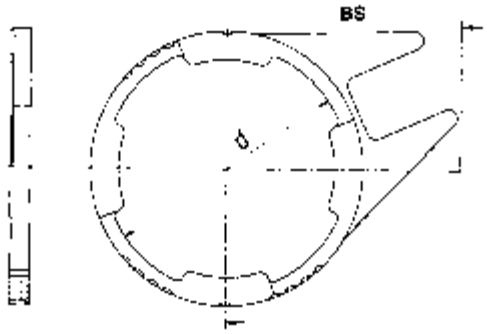

SPS

Wrench

Mat.: St 50
When ordering please specify:
Flange dia., size of adapter plate, wrench opening, Type of molding machine.

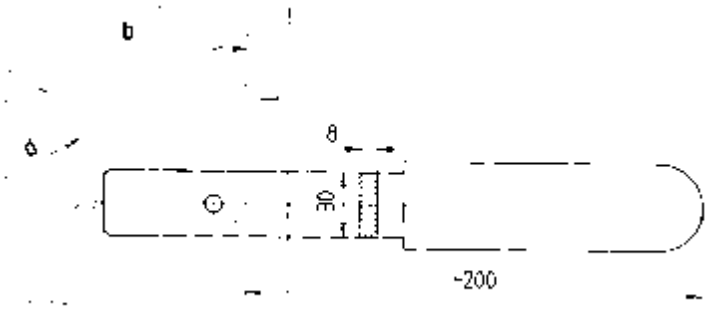

Centering device

ZV

Centering Device
Mat.: 1.1730
MAP = Machine plate

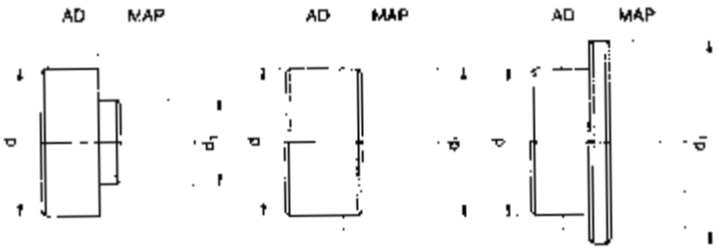

REF	d x d1
ZV	110 x 60
ZV	110 x 80
ZV	110 x 90
ZV	110 x 100
ZV	110 x 110
ZV	110 x 125
ZV	110 x 160
ZV	110 x 175
ZV	125 x 60
ZV	125 x 80
ZV	125 x 90
ZV	125 x 100
ZV	125 x 110
ZV	125 x 125
ZV	125 x 160
ZV	125 x 175

Thermal Insulating sheets

WP

Thermal conductivity ⍰: 0,2 W/mK
T max: 200°C
Compressive strength (20°C): 600 N/mm²

Screw holes and recesses for tiebars will be provided according to your drawing.

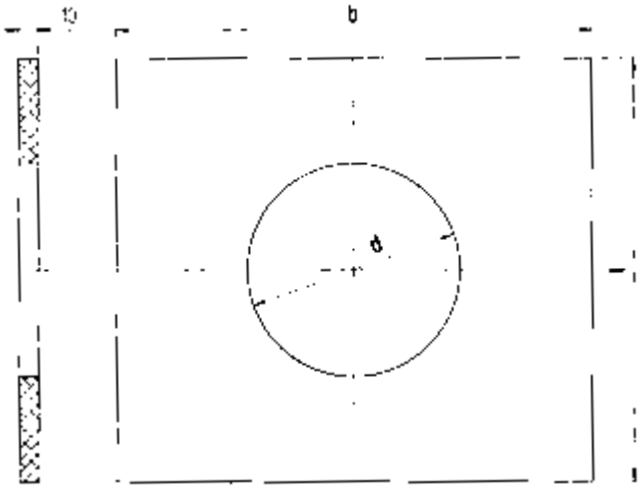

REF	d	l x b
WP	110	218 x 246
WP	110	246 x 246
WP	110	246 x 296
WP	110	265 x 396
WP	110	280 x 400
WP	110	296 x 296
WP	110	296 x 346
WP	110	346 x 346
WP	110	346 x 396
WP	110	396 x 396
WP	110	396 x 646
WP	110	400 x 450
WP	110	410 x 410

REF	d	l x b
WP	110	410 x 446
WP	110	446 x 446
WP	110	496 x 496
WP	110	496 x 546
WP	110	520 x 520
WP	110	530 x 530
WP	110	546 x 596
WP	110	580 x 580
WP	110	596 x596
WP	110	596 x 646
WP	110	646 x 646
WP	110	646 x 696
WP	110	696 x 696

REF	d	l x b
WP	125	218 x 246
WP	125	246 x 246
WP	125	246 x 296
WP	125	265 x 396
WP	125	280 x 400
WP	125	296 x 296
WP	125	296 x 346
WP	125	346 x 346
WP	125	346 x 396
WP	125	396 x 396
WP	125	396 x 646
WP	125	400 x 450
WP	125	410 x 410

REF	d	l x b
WP	125	410 x 446
WP	125	446 x 446
WP	125	496 x 496
WP	125	496 x 546
WP	125	520 x 520
WP	125	530 x 530
WP	125	546 x 596
WP	125	580 x 580
WP	125	596 x 596
WP	125	596 x 646
WP	125	646 x 646
WP	125	646 x 696
WP	125	696 x 696

ZF...

Locating rings

Mat.: 1.2312 ~ 1030 N/mm²

ZF 110		ZF 125	
Moveable half (BS)	Fixed half (FS)	Moveable half (BS)	Fixed half (FS)
ZF 110/BS/3 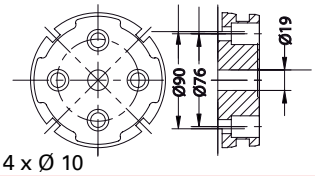 4 x Ø 10	**ZF 110/FS/3** 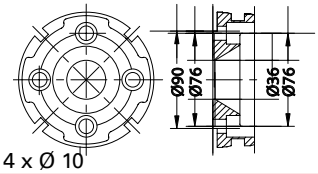 4 x Ø 10	**ZF 125/BS/1** 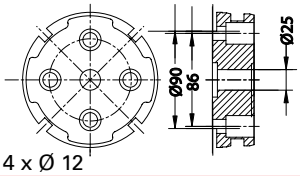 4 x Ø 12	**ZF 125/FS/1** 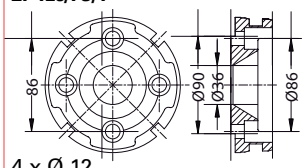 4 x Ø 12
ZF 110/BS/4 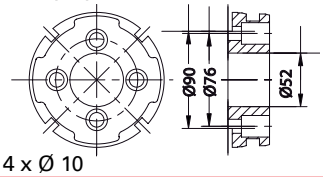 4 x Ø 10	**ZF 110/FS/4** 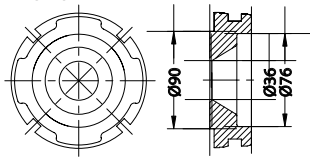 	**ZF 125/BS/2** 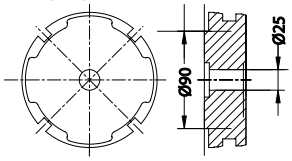 	**ZF 125/FS/2** 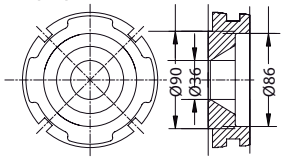
ZF 110/BS/5 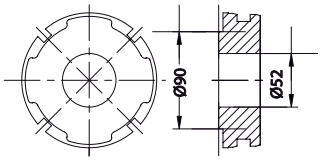 	**ZF 110/FS/6** 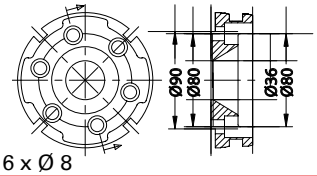 6 x Ø 8	**ZF 125/BS/3** 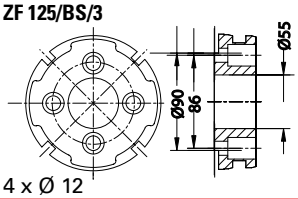 4 x Ø 12	**ZF 125/FS/3** 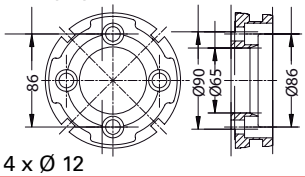 4 x Ø 12
ZF 110/BS/7 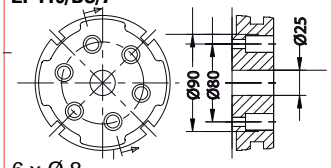 6 x Ø 8	**ZF 110/FS/8** 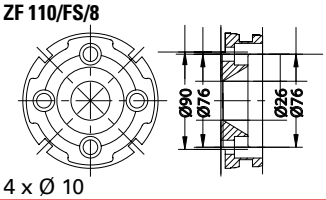 4 x Ø 10	**ZF 125/BS/4** 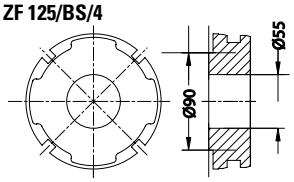 	**ZF 125/FS/4** 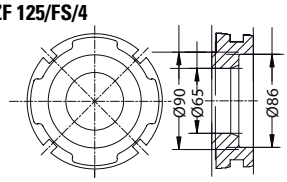
ZF 110/BS/8 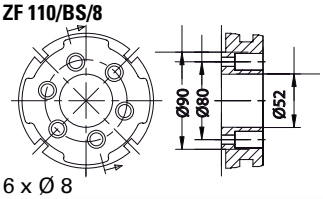 6 x Ø 8	**ZF 110/FS/9** 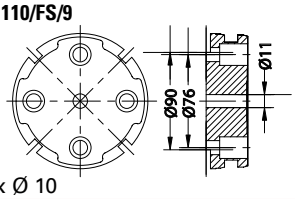 4 x Ø 10	**ZF 125/BS/5** 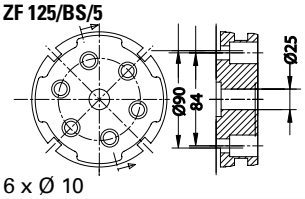 6 x Ø 10	**ZF 125/FS/5** 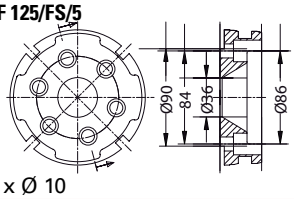 6 x Ø 10
ZF 110/BS/10 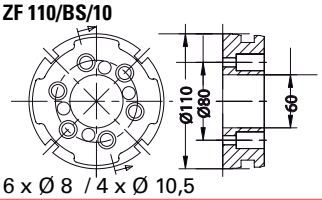 6 x Ø 8 / 4 x Ø 10,5	**ZF 110/FS/10** 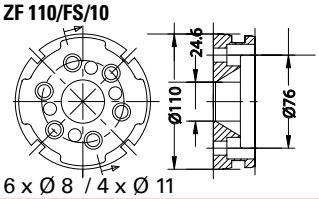 6 x Ø 8 / 4 x Ø 11	**ZF 125/BS/7** 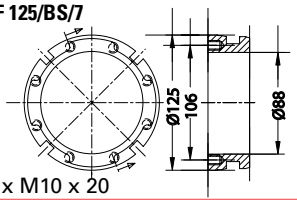 8 x M10 x 20	**ZF 125/FS/7** 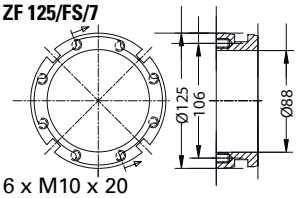 6 x M10 x 20
ZF 110/BS/16 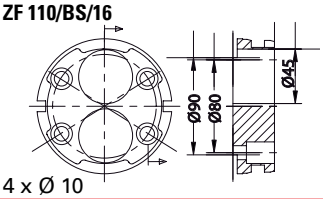 4 x Ø 10	**ZF 110/FS/11** 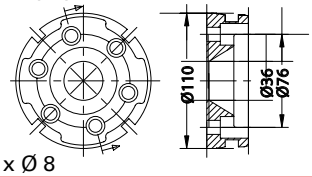 6 x Ø 8		
	ZF 110/FS/16 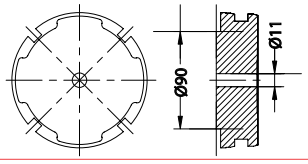 		

Mounting instructions

Info

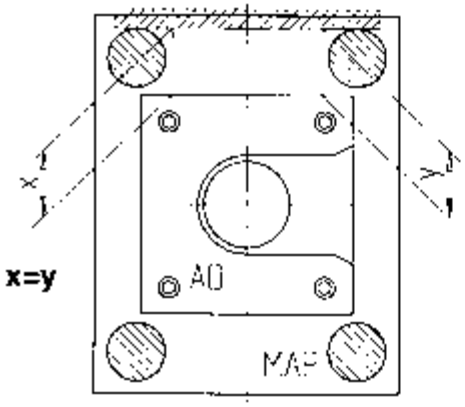

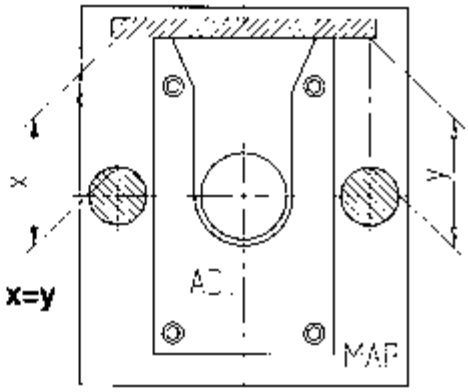

1. Mount mold-specific locating rings ZF on the mold.
2. Open injection molding machine, move back injection unit and machine ejector system.
3. Mount thermal insulating sheets WP (if available) onto the adapter plates AD using small SHC-screws.
4. Push back retention pins fixed to the adapter plates.
5. Insert centering device ZV into centering hole Dia. 110 mm or 125 mm of the adapter plates.
6. Position these subgroups according to the markings FS or BS onto the machine plates and mount them with SHC-screws. Don't screw in completely so that adjustment is still possible.
7. Align horizontal position of adapter plates according to sketch above and tighten screws.
8. Remove ZV, if necessary make thread in ZV.
9. In case mold set-up in horizontal direction is required, retention pins located in the adapter plates have to be pushed back.
10. For mold set-up into the molding machine proceed as usual. With mold and machine in closed position, mold must be interlocked at the fixed and moveable half using wrench. Remove wrench from the adapter plate.