MILACRON®

Date Stamps & Inserts extended range

DME

Every step of the way

MA

Short version with retaining thread

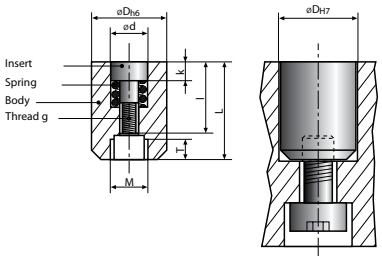

- Front-removable inner insert
- Press-fit for installation in the mold
- Mirror image, countersunk
- Other material upon request

Mat.: 1.4034, hardened

body	D	3	4	5	6	8	10	12
	L	7	8	12	12	14	16	20
	M	2	2	3	3	4	5	5
	T	2	2	3	3	3	3	4
	SW	-	-	-	-	-	-	-
insert	d	1,5	2,1	3,1	3,1	4,4	5,2	6,2
	k	0,9	1,2	2,0	2,0	2,5	3,0	3,0
	l	3,8	4,7	7,8	7,8	9,8	11,8	13,8
	g	M0,8x0,2	M1,1x0,25	M1,6x0,2	M1,6x0,2	M2,3x0,25	M2,5x0,35	M3x0,35
	a	0,3	0,3	0,4	0,4	0,4	0,4	0,6

Adjustment
Turn inner insert counter-clockwise. When correctly used **the inner insert** (e.g. date stamp with D=6mm) **will be max. 0,1mm lower or higher with the top** of the body.

a = depth arrow

Removal
Remove inner insert by turning it counter-clockwise and insert new inner insert by turning it clockwise.

a = depth arrow

MB

Short version, front-removable

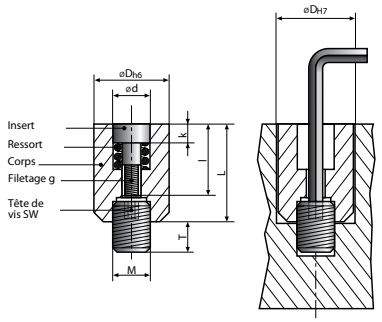

- Front-removable
- Threaded pin for installation in the mold
- Mirror image, countersunk
- Other material upon request

Mat.: 1.4034, hardened

body	D	4	5	6	8	10	12
	L	8	12	12	14	16	20
	M	2	3	3	4	5	5
	T	3	4	4	6	6	6
	SW	0,7	0,9	0,9	1,5	1,5	1,5
insert	d	2,1	3,1	3,1	4,4	5,2	6,2
	k	1,2	2,0	2,0	2,5	3,0	3,0
	l	4,7	7,8	7,8	9,8	11,8	13,8
	g	M1,1x0,25	M1,6x0,2	M1,6x0,2	M2,3x0,25	M2,5x0,35	M3x0,35
	a	0,3	0,4	0,4	0,4	0,4	0,6

Adjustment
Turn inner insert counter-clockwise. When correctly used **the inner insert** (e.g. date stamp with D=6mm) **will be max. 0,1mm lower or higher with the top** of the body.

a = depth arrow

Removal
Remove inner insert by turning it counter-clockwise and insert new inner insert by turning it clockwise.

a = depth arrow

MC

Long version, front-removable

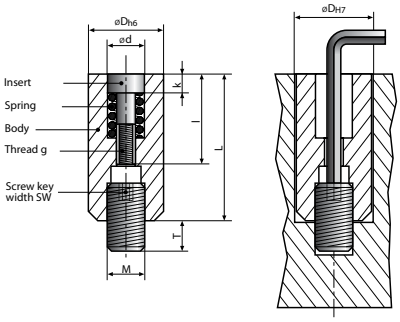

- Front-removable
- Threaded pin for installation in the mold
- Mirror image, countersunk
- Other material upon request

Mat.: 1.4034, hardened

body	D	4	5	6	8	10
	L	14	17	17	20	20
	M	2	3	3	4	5
	T	3	4	4	5	6
	SW	0,7	0,9	0,9	1,5	1,5
insert	d	2,5	3,1	3,1	4,6	4,6
	k	2,3	2,8	2,8	4,0	4,0
	l	10,5	13,0	13,0	14,0	14,0
	g	M1,4x0,2	M1,6x0,2	M1,6x0,2	M2,5x0,35	M2,5x0,35
	a	0,3	0,4	0,4	0,4	0,4

Adjustment
Turn inner insert counter-clockwise. When correctly used **the inner insert** (e.g. date stamp with D=6mm) **will be max. 0,1mm lower or higher with the top** of the body.

a = depth arrow

Removal
Remove inner insert by turning it counter-clockwise and insert new inner insert by turning it clockwise.

a = depth arrow

CAD reference point

MF

Standard

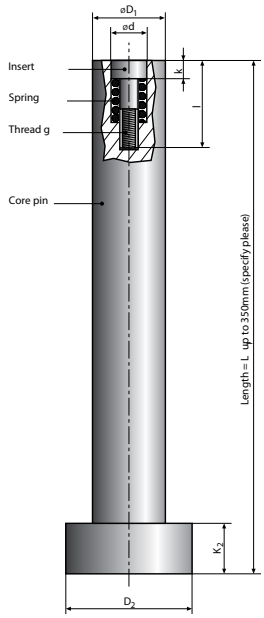

- Front-removable inner insert
- Core pins from 0 5 mm and Length up to 350 mm
- Mirror image, countersunk

a = depth arrow

core pin	D_1	5	6	8	10	12	16
	L_1	max 350	max 350	max 350	max 350	max 350	max 350
	D_2	10	12	14	16	18	22
	K_2	3	5	5	5	7	7
insert	d	3,1	3,1	4,6	4,6	6,4	8,4
	k	2,8	2,8	4	4	4	5
	l	13	13	14	14	17	23
	g	M1,6x0,2	M1,6x0,2	M2,5x0,35	M2,5x0,35	M3x0,5	M3x0,5
	a	0,4	0,4	0,4	0,4	0,6	0,6

MD OHV

(Ø 5/6/8/10/12) **insert remains flush**

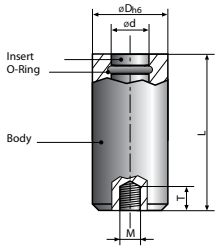

Especially suited for thin-walled parts or low viscosity materials (such as rubber, etc...)

- Front-removable inner insert
- O-Ring heat-resistant up to 200°C
- Threaded pin for installation in the mold
- Mirror image, countersunk
- Other material upon request

Mat.: 1.4034, hardened

D	5	6	8	10	12
d	3	3	4	5	6
L	17	17	20	20	25
M	3	3	4	5	6
T	3	3	5	5	6
a	0,4	0,4	0,4	0,4	0,6

Installation and adjustment
Adjust to required position.
When insert locks into postion, turn it ca. 3 turns to the left. => Insert is lifted. Then turn insert ca. 90° to the right and push back into the mold.
=> insert is flush.

a = depth arrow

Removal
Fully turn inner insert clockwise. Then turn the inner insert counter-clockwise until it can be removed. Install the new inner insert by turning it left to right under slight pressure.

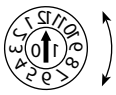

a = depth arrow

ME OHV

Mount with hex-key (Ø 5/6/8/10/12) **insert remains flush**

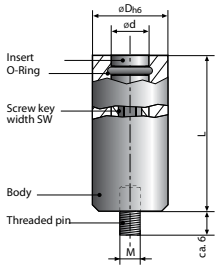

Especially suited for thin-walled parts or low viscosity materials (such as rubber, etc...)

- Front-removable
- O-Ring heat-resistant up to 200°C
- Threaded pin for installation in the mold
- Mirror image, countersunk
- Other material upon request

Mat.: 1.4034, hardened

D	5	6	8	10	12
L	17	17	20	20	25
M	3	3	4	5	6
T	3	3	5	5	6
SW	2	2	3	3	4
d	3	3	4	5	6
a	0,4	0,4	0,4	0,4	0,6

Installation and adjustment
Mount outer sleeve with hex-key from mold side Install the new inner insert by turning it left to right under slight pressure and turn to required position. When insert locks into postion, turn it ca. 3 turns to the left. => Insert is lifted. Then turn insert ca. 90°
to the right and push back into the mold. => insert is flush.

a = depth arrow

Removal
Fully turn inner insert clockwise. Then turn the inner insert counter-clockwise until it can be removed. Install the new inner insert by turning it left to right under slight pressure.

a = depth arrow

CAD reference point

MG OHV

(Ø 3/4) **insert remains flush**

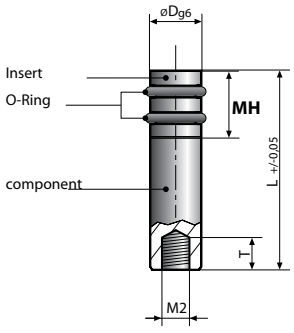

- Front-removable
- O-Ring heat-resistant up to 200°C
- Threaded pin for installation in the mold
- Mirror image, countersunk
- Other material upon request

D	3	4
L	14	17
M	2	2
T	2	2

Installation and adjustment
Install component.
Install the new inner insert by turning it left to right under slight pressure and turn to required position.
(**Tip**: Add chamfer to mold plate, sharp edge risks damaging)
When insert locks into postion, turn it ca. 3 turns to the left. => Insert is lifted. Then turn insert ca. 90° to the right and push back into the mold. => insert is flush.

a = depth arrow

Removal
Fully turn inner insert clockwise. Then turn the inner insert counter-clockwise until it can be removed. Install the new inner insert by turning it left to right under slight pressure.

a = depth arrow

MI OHV

Mount with hex-key (Ø 3/4) front-removable **insert remains flush**

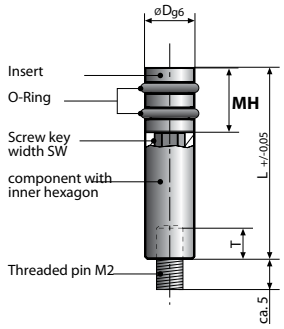

- Front-removable
- O-Ring heat-resistant up to 200°C
- Threaded pin for installation in the mold
- Mirror image, countersunk
- Other material upon request

D	3	4
L	14	17
M	2	2
T	2	2
SW	2	3

Installation and adjustment
Install component.
Install the new inner insert by turning it left to right under slight pressure and turn to required position.
(**Tip**: Add chamfer to mold plate, sharp edge risks damaging)
When insert locks into postion, turn it ca. 3 turns to the left. => Insert is lifted. Then turn insert ca. 90° to the right and push back into the mold. => insert is flush.

a = depth arrow

Removal
Fully turn inner insert clockwise. Then turn the inner insert counter-clockwise until it can be removed. Install the new inner insert by turning it left to right under slight pressure.

a = depth arrow

MK OHV

Standard **insert remains flush**

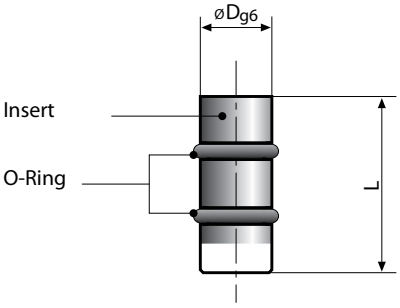

- Front-removable
- O-Ring heat-resistant up to 200°C
- Mirror image, countersunk
- Other material upon request

D	2	3	4
L	14	14	14

CAD reference point

ML **OHV**

Short version **insert remains flush**

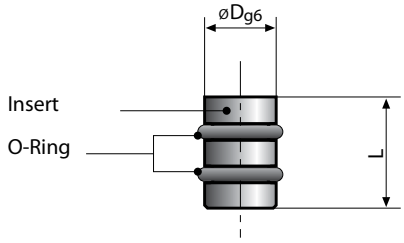

- Front-removable
- O-Ring heat-resistant up to 200°C
- Mirror image, countersunk
- Other material upon request

D	2	3	4
L	4	4	5

COIM - COIY - COIB **OHV**

Indexable date stamp "Snap-in"Positionierung **insert remains flush**

- Insert remains flush when rotated
- Easily adjustable/removable by using a screwdriver (screw driver set SCR 5)
- Stainless steel 50-55 HRC
- Temperature 150° C
- Indexable snap-in-place positioning.
- Unique design keeps inner insert flush with the molding surface.

D	6	8	10
L	8	10	12
C	3,1	4,4	5,2

SE 630

Hexagon socket screw key

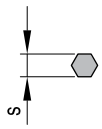

REF	S
SE 630 0,7	0,7
SE 630 0,9	0,9
SE 630 1,5	1,5
SE 630 2	2,0
SE 630 3	3,0
SE 630 4	4,0

CAD reference point

MA - MB - MC

Date stamps

Standard version

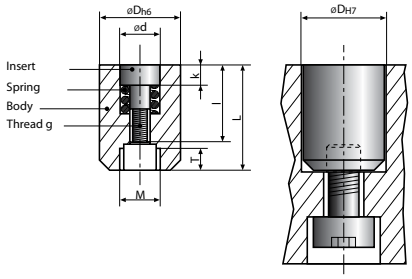

Mat.: 1.4034, hardened

D	3	4	5	6	8	10	12
L	7	8	12	12	14	16	20

Short version, front-removable

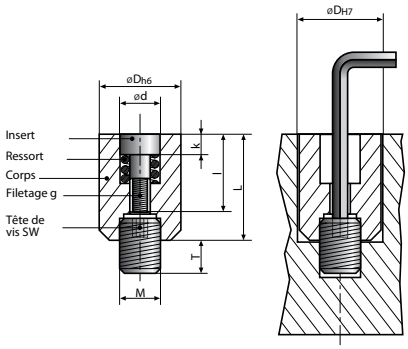

Mat.: 1.4034, hardened

D	4	5	6	8	10	12
L	8	12	12	14	16	20

Long version, front-removable

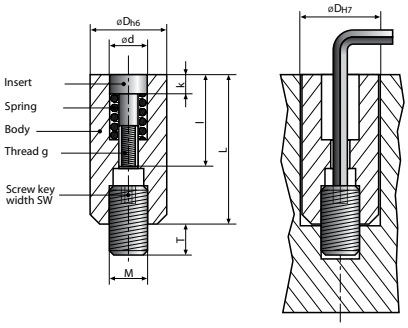

Mat.: 1.4034, hardened

D	4	5	6	8	10
L	14	17	17	20	20

	REF	Description	REF	Description	REF	Description
(Dezember 2009)	**MAA (D) / 1-12 / (year)**	month + year	**MBA (D) / 1-12 / (year)**	month + year	**MCA (D) / 1-12 / (year)**	month + year
(Dezember)	**MAB (D) / 1-12**	month	**MBB (D) / 1-12**	month	**MCB (D) / 1-12**	month
(2009)	**MAC (D) / (year) / +5**	6 years (year + 5)	**MBC (D) / (year) / +5**	6 years (year + 5)	**MCC (D) / (year) / +5**	6 years (year + 5)
(2009)	**MAD (D) / (year) / +11**	12 years (year + 11)	**MBD (D) / (year) / +11**	12 years (year + 11)	**MCD (D) / (year) / +11**	12 years (year + 11)
	MAE (D) / SET1 / (year)	set 1: weeks + years	**MBE (D) / SET1 / (year)**	set 1: weeks + years	**MCE (D) / SET1 / (year)**	set 1: weeks + years
	MAF (D) / SET2 / (year)	set 2: set (the month insert should be replaced monthly)	**MBF (D) / SET2 / (year)**	set 2: set (the month insert should be replaced monthly)	**MCF (D) / SET2 / (year)**	set 2: set (the month insert should be replaced monthly)
	MAG (D) / SET3 / (year)	set 3: date set	**MBG (D) / SET3 / (year)**	set 3: date set	**MCG (D) / SET3 / (year)**	set 3: date set
	MAH (D) / 1-3	shift	**MBH (D) / 1-3**	shift	**MCH (D) / 1-3**	shift
	MAI (D) / 1-4/ (year)	quarter + year	**MBI (D) / 1-4/ (year)**	quarter + year	**MCI (D) / 1-4/ (year)**	quarter + year
	MAJ (D) / A-M	A-M	**MBJ (D) / A-M**	A-M	**MCJ (D) / A-M**	A-M
	MAK (D) / N-Z	N-Z	**MBK (D) / N-Z**	N-Z	**MCK (D) / N-Z**	N-Z
	MAL (D) / (custom	custom (include drawing)	**MBL (D) / (custom)**	custom (include drawing)	**MCL (D) / (custom)**	custom (include drawing)
(Tag 30)	**MAM (D) / 1-31**	days	**MBM (D) / 1-31**	days	**MCM (D) / 1-31**	days
	MAN (D)	blank	**MBN (D)**	blank	**MCN (D)**	blank

(z.B. 11 = 2011)	**MAO (D) / year**	year + arrow	**MAO (D) / year**	year + arrow	**MCO (D) / year**	year + arrow
	MAP (D)	arrow	**MAP (D)**	arrow	**MCP (D)**	arrow
	MAQ (D) / (custom)	number/letter according to customer specification (max. 2 characters)	**MAQ (D) / (custom)**	number/letter according to customer specification (max. 2 characters)	**MCQ (D) / (Gew. Gravur)**	number/letter according to customer specification (max. 2 characters)

CAD reference point

Date stamps **insert remains flush**

MD - ME

Insert remains flush (0 5/6/8/10/12)

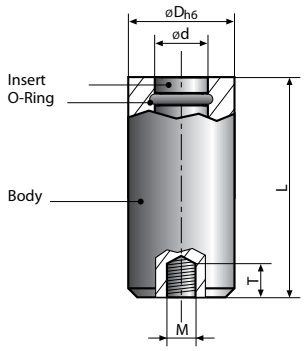

Mat.: 1.4034, hardened

D	5	6	8	10	12
L	17	17	20	20	25

Insert remains flush, mount with hex-key (0 5/6/8/10/12)

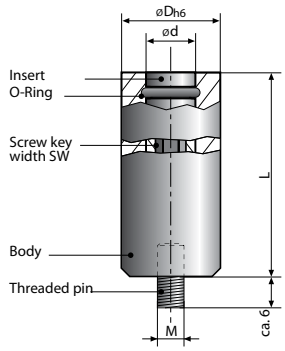

Mat.: 1.4034 , hardened

D	5	6	8	10	12
M	3	3	4	5	6

	REF	Description	REF	Description
(Dezember 2009)	**MDA (D) / 1-12 / (year)**	month + year	**MEA (D) / 1-12 / (year)**	month + year
	MDB (D) / 1-12	month	**MEB (D) / 1-12**	month
(2009)	**MDC (D) / (year) / +5**	6 years (year + 5)	**MEC (D) / (year) / +5**	6 years (year + 5)
(2009)	**MDD (D) / (year) / +11**	12 years (year + 11)	**MED (D) / (year) / +11**	12 years (year + 11)
	MDE (D) / SET1 / (year)	set 1: weeks + years	**MEE (D) / SET1 / (year)**	set 1: weeks + years
	MDF (D) / SET2 / (year)	set 2: set (the month insert should be replaced monthly)	**MEF (D) / SET2 / (year)**	set 2: set (the month insert should be replaced monthly)
	MDG (D) / SET3 / (year)	set 3: date set	**MEG (D) / SET3 / (year)**	set 3: date set
	MDH (D) / 1-3	shift	**MEH (D) / 1-3**	shift
	MDI (D) / 1-4/ (year)	quarter + year	**MEI (D) / 1-4/ (year)**	quarter + year
	MDJ (D) / A-M	A-M	**MEJ (D) / A-M**	A-M
	MDK (D) / N-Z	N-Z	**MEK (D) / N-Z**	N-Z
	MDL (D) / (custom)	custom (include drawing)	**MEL (D) / (custom)**	custom (include drawing)
(Tag 30)	**MDM (D) / 1-31**	days	**MEM (D) / 1-31**	days
	MDN (D)	blank	**MEN (D)**	blank

(z.B. 11 = 2011)	**MDO (D) / year**	year + arrow	**MDO (D) / year**	year + arrow
	MDP (D)	arrow	**MDP (D)**	arrow
	MDQ (D) / (custom)	number/letter according to customer specification (max. 2 characters)	**MDQ (D) / (custom)**	number/letter according to customer specification (max. 2 characters)

CAD reference point

MILACRON®

MF

Date pin Mat.: 1.2344

Standard
- Front-removable inner insert
- Core pin 0 5 mm and length up to 350 mm
- Mirror image, countersunk

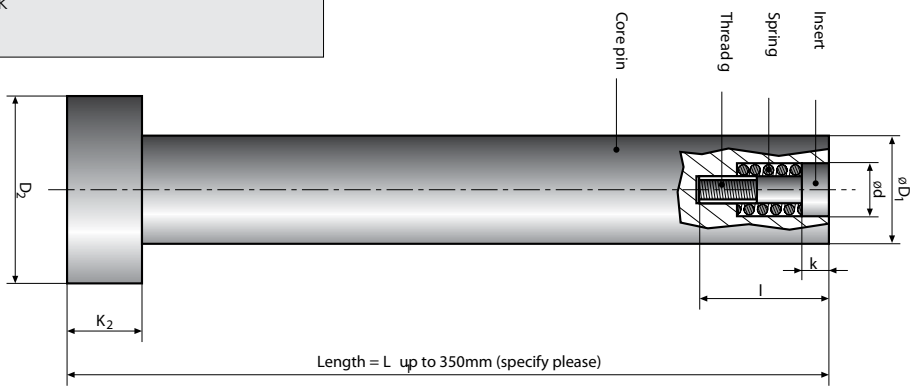

D_1	5	6	8	10	12	16
L_1	max. 350	max. 350	max. 350	max. 350	max. 350	max. 350

	REF	Description
(Dezember 2009)	**MFA (D_1) / 1-12 / (year)**	month + year
(Dezember)	**MFB (D_1) / 1-12**	month
(2009)	**MFC (D_1) / (year) / +5**	6 years (year + 5)
(2009)	**MFD (D_1) / (year) / +11**	12 years (year + 11)
	MFE (D_1) / SET1 / (year)	set 1: weeks + years
	MFF (D_1) / SET2 / (year)	set 2: set (the month insert should be replaced monthly)
	MFG (D_1) / SET3 / (year)	set 3: date set
	MFH (D_1) / 1-3	shift
	MFI (D_1) / 1-4/ (year)	quarter + year
	MFJ (D_1) / A-M	A-M
	MFK (D_1) / N-Z	N-Z
	MFL (D_1) / (custom)	custom (include drawing)
(Tag 30)	**MFM (D_1) / 1-31**	days
	MFN (D_1)	blank

(z.B. 11 = 2011)	**MCO (D_1) / year**	year + arrow
	MCP (D_1)	arrow
	MCQ (D_1) / (custom)	number/letter according to customer specification (max. 2 characters)

CAD reference point

Date stamp **insert remains flush** Mat.: 1.4034

MG - ME

Insert remains flush when rotated (0 3/4)
- Front-removable inner insert
- O-Ring heat-resistant up to 200°C
- Threaded pin for installation in the mold
- Mirror image, countersunk

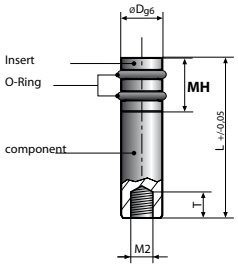

D	3	4
L	14	17

	REF	Description	Insert
	MGA (D) / 1-12 / (year)	month + year	**MHA**
	MGB (D))/ 1-12	month	**MHB**
	MGC (D) / (year) / +3	4 years (year + 3)	**MHC**
	MGD (D) / A-F	A-F	**MHD**
	ME	electrode	-

Date stamp, mount with hex-key, **insert remains flush** Mat.: 1.4034

MI - ME

Insert remains flush (0 3/4) front-removable
- Front-removable inner insert
- O-Ring heat-resistant up to 200°C
- Threaded pin for installation in the mold
- Mirror image, countersunk

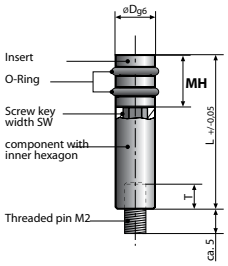

D	3	4
L	14	17

	REF	Description	Insert
	MIA (D) / 1-12 / (year)	month + year	**MHA**
	MIB (D) / 1-12	month	**MHB**
	MIC (D) / (year) / +5	4 years (year + 3)	**MHC**
	MID (D) / (year) / +11	A-F	**MHD**
	ME	electrode	-

Date stamp **insert remains flush** Mat.: 1.4034

MK - ME

Standard
- Front-removable inner insert
- O-Ring heat-resistant up to 200°C
- Mirror image, countersunk

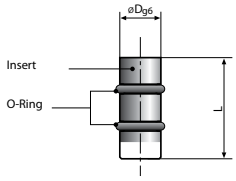

D	2	3	4
L	14	14	14

	REF	Description
	MKA (D) / 1-12 / (year)	month + year
	MKB (D) / 1-12	month
	ME	electrode

Date stamp **insert remains flush** Mat.: 1.4034

ML - ME

Short version
- Front-removable inner insert
- O-Ring heat-resistant up to 200°C
- Mirror image, countersunk

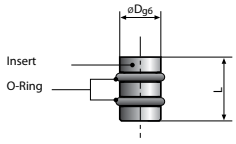

D	2	3	4
L	4	4	5

	REF	Description
	MLA (D) / 1-12 / (year)	month + year
	MLB (D) / 1-12	month
	ME	electrode

CAD reference point

SCR5

Screw Driver Set

- Set of 5 screw drivers
- Custom made for the complete DME range of date stamps
- Blades made out of chrome-vanadium-molybdenum-steel fully hardened and chromium plated for precision and long life
- Ergonomic handle design
- Color coded pivot cap
- Extremely precise fit of the tip

2x	1,1 x 0,20 x 60		Ø 2,6 Ø3
1x	1,6 x 0,15 x 60		Ø4
1x	2,3 x 0,20 x 60		Ø5 Ø6
1x	3,0 x 0,30 x 60		Ø8